CDC 4M051N

Aerospace Physiology Journeyman

Volume 4. Cabin Pressurization and Aircraft Emergency Escape

Extension Course Program (A4L)
Air University
Air Education and Training Command

4M051N 04 0906, Edit Code 03
AFSC 4M051

Author: TSgt Felicita Sueiras
USAFSAM/FEEP
USAF School of Aerospace Medicine (AFMC)
2601 Louis Bauer Drive
Brooks City-Base, Texas 78235-5130
DSN: 240-3365
E-mail address: felicita.sueiras-martinez@brooks.af.mil

Instructional Systems Specialist: Gordon L. Morrison

Editor: Nelva J. Brown

Extension Course Program (A4L)
Air University (AETC)
Maxwell-Gunter Air Force Base, Alabama 36118–5643

Material in this volume is reviewed annually for technical accuracy, adequacy, and currency. For SKT purposes the examinee should check the *Weighted Airman Promotion System Catalog* to determine the correct references to study.

WHEN WE think about flying, safety and comfort are two words we always like to hear no matter what the situation. The same holds true for aircrew members in flight. Their safety and comfort should always be considered. With long, stressful, and often dangerous missions, they must have the peace of mind they are protected in any situation. The purpose of volume 4 is to introduce some devices that contribute to both aircrew and passenger safety and comfort.

One of the most important in-flight safety and comfort features utilized on civilian and military aircraft is the pressurization system. In unit 1 we discuss how different types of pressurization systems operate, and the advantages and disadvantages of each system. We conclude the unit with a discussion on what aircrew members and passengers should do in the event the pressurization system fails.

In unit 2 we discuss procedures and systems used by aircrew members in the event of an in-flight emergency requiring egress from the aircraft. We begin by discussing the personnel parachute and its components. We then move into the ejection seat systems and in-flight egress procedures. The last two sections cover various aspects of survival preparation and crash survival procedures.

A glossary of abbreviation and acronyms is included at the end of this volume.

Code numbers appearing on figures are for preparing agency identification only.

The use of a name of any specific manufacturer, commercial product, commodity, or service in this publication does not imply endorsement by the Air Force.

To get a response to your questions concerning subject matter in this course, or to point out technical errors in the text, unit review exercises, or course examination, call or write the author using the contact information on the inside front cover of this volume.

NOTE: Do not use the IDEA Program to submit corrections for printing or typographical errors.

Consult your education officer, training officer, or NCOIC if you have questions regarding course enrollment, administration, or irregularities (possible scoring errors, printing errors, etc.) on unit review exercises or course examination. For these and other administrative issues, you may also access the AU E-Campus Support Center (Helpdesk) via the https://www.auecampussupport.com website and do a search in Frequently Asked Questions (FAQs). You may find your questions may have already been answered. If not, submit a new question or request, and you will receive a response within four duty days.

This volume is valued at 15 hours (5 points).

WE NEED YOUR FEEDBACK! When you finish this course, please complete the student survey on the Internet at this URL: http://www.auecampussupport.com. Click on Student Info and choose the **CDC Student Satisfaction Feedback.**

NOTE:

In this volume, the subject matter is divided into self-contained units. A unit menu begins each unit, identifying the lesson headings and numbers. After reading the unit menu page and unit introduction, study the section, answer the self-test questions, and compare your answers with those given at the end of the unit. Then, do the unit review exercises.

Contents iii

Page

Unit 1. Cabin Pressurization and Decompression 1–1

1–1. Principles of Cabin Pressurization 1–1

1–2. Effects of a Decompression 1–16

Unit 2. Aircraft Emergency Escape 2–1

2–1. Parachutes and their Components 2–1

2–2. Ejection Seat Systems and In-flight Egress 2–13

2–3. Parachuting Fundamentals 2–21

2–4. Survival Factors and Equipment 2–37

2–5. Crash Survival 2–52

Glossary G–1

Please read the unit menu for unit 1 and begin ➔

Unit 1. Cabin Pressurization and Decompression

1–1. Principles of Cabin Pressurization 1–1
601. Methods of pressurization 1–2
602. Pressurization schedules 1–5
603. Cabin decompression characteristics 1–8
1–2. Effects of a Decompression 1–16
604. Physical and physiological effects of a decompression 1–16
605. Precautionary and corrective procedures 1–19

THIS UNIT explains why a pressurization system is so crucial in military and civilian aircraft. We discuss types of pressurization systems and schedules, factors affecting decompressions, as well as the physiological factors to consider in order to survive a decompression.

Scientists began examining the effects of high altitude flight in the latter half of the 19th century. There were no aircrafts as we know them now, so manned balloons were used. Two Englishmen, Glaisher and Coxwell ascended to about flight level (FL) 290 in 1862. Glaisher noticed a loss of visual acuity and hearing, paralysis of his arms and legs, and eventually became unconscious. Coxwell's arms also became paralyzed, but he managed to pull the valve rope with his teeth to descend the balloon. Both men recovered at lower altitudes.

In 1875, three Frenchmen, Tissander, Sivel, and Croce-Spinelli, ascended to about FL 280. Paul Bert, a physiologist studying the effects of decreased barometric pressure, warned them to carry supplemental oxygen on their flight. Although they agreed to take additional oxygen, Bert felt the amount they took was insufficient. To preserve their limited oxygen supply, the balloonists waited too late to use it and all three men became hypoxic and eventually unconscious between FL 240 and 260. The balloon descended on its own after reaching about FL 300. Only Tissander survived.

These early balloon flights highlight the conflict that continues to exist between man and his environment and the physiological challenges we encounter at high altitude. Indeed, a primary goal in aviation is the prevention of hypoxia and decompression sickness among aircrew members. Prevention is accomplished by maintaining the oxygen partial pressure of ambient cabin air while continuing to fly at high altitudes. Maintaining pressure is not done without compromising aircraft performance. Aircraft performance is reduced due to the increased weight imposed by the additional equipment required.

Aircraft cabin pressurization, providing partial or complete protection against hypoxia at higher altitudes, was adopted for military aircraft during World War II. Although the piston-engined aircrafts of World War II often flew at high altitudes, they were not pressurized. Instead pilots used oxygen masks to overcome the effects of decreased atmospheric pressure. However, in larger bomber type aircraft where the crew moved about the cabin, this was considerably less practical. The first aircraft with cabin pressurization (though restricted to crew areas) was the B–29 Super Fortress. During the post-war era, piston airliners such as the Lockheed Constellation brought the technology to civilian service, and as jet airliners were developed they incorporated cabin pressurization into their designs to support high altitude operations.

1–1. Principles of Cabin Pressurization

As you have already learned from previous volumes of your career development course (CDC) we must have a method to protect ourselves from hypoxia when flying above 10,000 feet. The role of oxygen equipment in providing protection was discussed in volume 3. Using oxygen equipment provides some protection but it has limitations. The equipment may impair aircrew mobility or can malfunction. As you may recall, aircrews must also use 100 percent oxygen under pressure when

flying above FL 400. You may also remember that the human body cannot tolerate positive pressure breathing for long periods of time due to the intrapulmonary pressure.

As aircraft became capable of flying at altitudes above which aircrews could operate efficiently, a need developed for a complete environmental system. Air conditioning provided the adequate temperature and supplemental oxygen provided sufficient breathable air. The one problem still to overcome was the insufficient amount of atmospheric pressure at high altitude to aid in breathing; even at lower altitudes the body must work harder to absorb sufficient oxygen through the lungs to operate at the same level of efficiency as at sea level (SL). This problem was solved by cockpit/cabin area pressurization.

601. Methods of pressurization

Air Force Instruction (AFI) 11–202, Volume 3, *General Flight Rules*, states that an unpressurized aircraft shall not exceed FL 250 even if its occupants have oxygen. The most effective way to protect us from physiological hazards associated with pressure breathing is to increase the barometric pressure of the crew and passenger compartments. This effectively lowers the cabin altitude to a safe level. However, aircraft pressurization creates the additional challenge of ensuring the aircraft structure is sound enough to contain this pressure. Cabin altitude normally remains below 10,000 feet in a multi-place aircraft or below FL 250 in a fighter aircraft.

Cabin pressurization is simply defined as a method of maintaining cabin (interior) pressure greater than ambient (outside) pressure. In this lesson we identify the two methods of pressurization used in today's aircraft: the conventional *pressurized* cabin and the less widely used *sealed* cabin.

Pressurized cabins

At altitude, the density of the air decreases. Since we are unable to breathe this 'thinner' air, we must increase the density of the cabin air. The conventional method for increasing aircraft cabin pressure involves using ambient air. This is the most common and cost effective method of aircraft pressurization. This method uses compressors incorporated into the aircraft engines to force ambient air into the aircraft. The compressed (pressurized) air enters a conditioning system as it leaves the engine. The air conditioning system cools the air and adds moisture (humidity) as needed, and then it enters distribution lines. The area of an aircraft to be pressurized must be free from all air leaks. This is accomplished by the use of seals around the tubing, ducting, bolts, rivets, and other hardware that pass through or pierce the pressure tight area. All panels and large structural components are assembled with sealing compounds. Access and removable doors and hatches have integral seals while canopies are constructed with inflatable seals.

The aircraft cabin is pressurized by an Environmental Control System (ECS) using air provided by compressors or *bleed air*. As the air is drawn into the jet engine, it goes through a series of rotors and stators (blades) which compress the air before going into the combustion chamber. Not all air is taken up through the combustion chamber, so it is re-routed through some lines – this air is what we referred to as bleed air. The bleed air extracted from the engines is compressively heated and extracted at approximately 200 – 250 degrees Celsius (°C) (392 – 482 degrees Fahrenheit (°F)) and then cooled by passing it through a heat exchanger and air cycle machine more commonly referred to by aircrews and mechanics as the *packs system*. Pressure controllers are located in the distribution lines to maintain the pressure in the cabin. Controllers increase airflow when cabin pressure decreases; thereby increasing cabin pressure. Safety valves open to reduce cabin pressure when cabin pressure exceeds safety parameters.

Most modern commercial aircraft today have dual channel electronic controllers for maintaining pressurization along with a manual back-up system. These systems maintain air pressure equivalent to 8,000 feet or less, even during flight at altitudes above FL 430. Aircraft have a positive pressure relief valve in the event of excessive pressure in the cabin. This is to protect the aircraft structure from excessive loading. The difference between the cabin pressure and the outside ambient pressure is

normally between 7.5 pounds per square inch (psi) and 8 psi at a maximum. If the cabin was to be pressurized at a pressure equivalent to sea level and then flown to FL 350 or more, the pressurization differential would be greater than 9 psi and the structural life of the airplane would be limited. This is due to the fact the traditional method of bleed air extraction from the jet engine reduces the efficiency of the engine. Newer aircraft (i.e. Boeing 787, C–17) are using electric compressors to provide pressurization. This allows greater propulsive efficiency. In order to explain this more clearly, we will first learn about the mechanical elements involved in pressurizing the aircraft cabin, and then we will take a look at several physical limitations to this process.

Mechanical elements

Ambient air is compressed in one of two ways. First, in combat aircraft the air needed for pressurizing and conditioning a cabin comes off the engine compressor stage or bleed air. The location of the input air pressure is upstream of the engine's combustion chambers. The second is in multi-place aircraft. Each engine on a multi-engine aircraft is equipped with an auxiliary compressor. These compressors deliver a supply of pressurized air to an air conditioning system, then to the cabin. What follows are several other devices used in ensuring aircraft pressurization.

Flow controller valve

These valves control the airflow going through the cabin, automatically controlling the amount of air delivered to the cabin by the engines or auxiliary compressors. Cabin volume determines the amount of air required to maintain a desired pressure in both aircrew and passenger compartments. The flow controller also plays an important part in removing carbon dioxide and odors, and replacing oxygen within the cabin.

Non-return valve

The non-return valves keep air entering the cabin from reentering the delivery lines. The air remains in the cabin if the system fails in some way. These valves also stop the inflow of air if the source becomes unusable. Stopping the inflow of air automatically activates a ram air valve in some aircraft. The ram air inlet valve allows external air to enter the cabin quickly and is especially useful in combat aircraft if smoke or fumes are present. A disadvantage associated with activating the ram air valve is cabin pressure reduces; subsequently exposing the aircrew to hypoxia and possible decompression sickness.

Discharge and overflow valve

The air flows out of the cabin, through one or a series of discharge valves. These valves create a restriction, resulting in a cabin pressure increase. Excessive opening of these valves can cause an increase of inflow air; if so, auxiliary compressors will continue to supply inflow air to the cabin to make up for the pressure drop. The valves are either pneumatically or electrically controlled by signals from the overflow valve. The cabin pressure is determined by the output of the overflow valve. A loss of pressurization occurs if the overflow valve remains on or if it sticks open. Discharge valves are duplicated in multi-place aircraft in the event a primary discharge valve fails, an alternate one activates. These valves are normally not duplicated on combat aircraft because of weight and space considerations.

Safety and in-ward vent valves

All aircraft have a maximum pressure differential due to structural limitations. The safety valve activates when the aircraft exceeds its maximum pressure ratio and the discharge valves fail to open. The in-ward vent valve allows ambient air to enter the cabin when it falls below atmospheric pressure. When airflow becomes reduced or nonexistent, the valve senses the negative pressure (low pressure) within the cabin during a rapid descent. The valve opens when this occurs, allowing the cabin pressurization system to compensate for the pressure change.

Using this valve to decompress an aircraft allows aircrew to control the rate of decompression. Aircrew control is especially useful during parachute drop mission support. The cabin is decompressed at a safe rate for both jumpers and crew members.

Physical limitations

The pressurization system has physical limitations that must be considered. These physical and engineering factors limit the capability of the compressor system to pressurize the cabin effectively at extremely high altitudes. There are three distinct limitations of a pressurization system: compression, compressor temperature, and mechanical failure of a pressurized cabin.

Compression

The ambient air at FL 600 must be compressed 10 times to maintain an aircraft cabin pressure equivalent to 10,000 feet. Ambient air at FL 750 must be compressed 20 times to maintain the same cabin pressure. It becomes increasingly difficult for the compressor to maintain an acceptable cabin pressure as ambient pressure decreases. The air becomes so thin with increasing altitudes that it is impossible for the compressor to supply enough air to pressurize the cabin. The compressor would eventually stall and the pressurization system would fail. Cabin pressurization by mechanical compressors is limited to FL 800.

Compressor temperature

Compressed air temperature increases with altitude. Compressed air reaches a temperature of 600° F at FL 750 when the compressor maintains a 10,000 feet cabin pressure. At this temperature, it is critical that an efficient cooling and air conditioning system is used to maintain a comfortable and survivable cabin environment.

Mechanical failure

Cabin pressure failures fall into three categories: maintenance deficiencies, defective parts, and human error. Maintenance deficiencies include improper or missed scheduled maintenance. Defective parts come directly from manufacturers with improper tolerances; contributing to many failures. Seals around doors, hatches, windows and canopies are the most common items affected. The outcome of human error can be disastrous. Checklists aid aircrew members in performing their tasks. However, items on checklists can be overlooked or missed all together.

Advantages of cabin pressurization

Reducing the probability of hypoxia and decompression sickness is the most important advantage of a pressurized cabin. In multi-place aircraft, aircrew and passenger comfort is taken into consideration as well. Aircrew and passengers experience less fatigue and more mobility because there is no need to use cumbersome oxygen equipment or to pressure breathe. The use of oxygen equipment in most multi-place aircraft is generally necessary only during emergencies involving pressurization loss, fire, smoke, and/or fumes. Pressurized cabins help decrease decompression sickness (DCS) and gastrointestinal (GI) trapped gas problems. Cabin temperature, humidity, and ventilation are controlled within a desired comfort range. Prolonged passenger flights (i.e., air evacuation and troop movements) over long distances occur with a minimum degree of fatigue and discomfort.

Passenger comfort in civilian aircraft is taken into account during descent as well. Considerable protection against ear and sinus blocks is provided by permitting cabin pressure to increase gradually and in a controlled manner. Again, civilian airliners increase and decrease cabin pressure at 300 to 500 feet per minute (fpm). The C–130 Hercules can increase and decrease cabin altitude a minimum of 30 to 200 fpm and a maximum of 1,600 to 2,900 fpm.

Disadvantages of cabin pressurization

Aircraft performance and fuel efficiency decrease because the pressurized cabin area requires increased structural weight and strength to maintain the pressure. Additional equipment, design

engineering, and extra power requirements are needed for pressurization, ventilation, and air conditioning. Additional maintenance time and costs increase as designers add equipment to the airframe.

A method of controlling the cabin environment must exist because aircrew and passenger safety is paramount. Aircrew must be able to remove or prevent possible contaminants from entering the cabin. During normal operations cabin pressurization removes and controls contaminants such as carbon dioxide, water vapor, and odors. These include smoke and/or fumes, carbon monoxide, and other potentially fatal airborne gases possibly present during an in-flight emergency such as an onboard fire.

The possible threat of pressurization loss is the greatest disadvantage. Occupants are immediately exposed to the inherent hazards of ambient flight altitude. Depending on the size of the opening in the structure, decompression windblast increases the possibility of personnel being drawn out through the opening.

Sealed cabins

Conventional pressurization systems provide a near constant gas exchange between outside and inside the aircraft. As we have already mentioned, this pressurization method can be used to about FL 800. However, above FL 800, a sealed system must be used.

The problem with using a conventional pressurization system above FL 800 is the difficulty of drawing in the required amount of air to maintain sufficient cabin pressure and the enormous amount of heat needed to compress the air. The ambient air becomes so thin at even higher altitudes that the amount of air needed to pressurize the cabin cannot be drawn in. Yet, a need exists to fly at these higher altitudes. In these cases, such as with the Space Shuttle, the cabin must be sealed.

Sealed cabins must maintain an adequate environment for aircrew survival as ambient barometric pressure approaches zero. High altitude air and spacecraft, most notably National Aeronautics and Space Administration (NASA) Space Shuttle, are commonly associated with this system. These aircraft must be self-sufficient vessels, capable of controlling and maintaining an enclosed atmosphere for their occupants. The space shuttle carries its own supply of gases and maintains a breathable cabin atmosphere. Its internal atmosphere is similar to the earth's atmosphere: 21 percent oxygen and 79 percent nitrogen. The shuttle's Environmental Control and Life Support systems are responsible for maintaining the correct mix of gases and providing the required cabin pressure and environment in the shuttle.

The Space Shuttle orbiter has an atmospheric revitalization system, which uses air circulation and water coolant loops to remove heat, control humidity, and clean and purify cabin air. In addition, the pressure control system monitors and maintains the crew compartment at 14.7 pounds per square inch absolute (psia) with a breathable mixture of oxygen and nitrogen. Using an activated charcoal filter system and lithium hydroxide canisters, the air in the sealed compartment continuously undergoes purification because of the limited supply of gases onboard the shuttle. The filter and canisters scrub the air removing odors, carbon dioxide, etc. The gas mixers ensure the correct oxygen and nitrogen percentages as needed, and recirculate the gas once purification is complete.

602. Pressurization schedules

Aircrafts can be flown unpressurized and pressurized. Pressurized aircraft for both military and civilian aircraft are maintained by either isobaric or isobaric differential pressurization schedules, which we discuss in this lesson. It is important to remember that not all military aircraft have a pressurization system. For example, Air Force Special Operations Command (AFSOC) has the CV–22 aircraft, whose mission is to conduct long-range infiltration, exfiltration and resupply missions for special operations forces. Its *operational ceiling* is FL 250 which is the highest altitude an aircraft is allowed to fly unpressurized according to Air Force instructions. Although there are two schedules,

most military aircraft use the isobaric-differential type. Before we continue, take some time to review the following concepts and their definitions.

Concept	Definition
Cabin pressure (cabin altitude)	This is the pressure inside the aircraft to which aircrew and passengers are exposed to. In order to prevent hypoxia, the pressure should be at least 523 mmHg (millimeters of mercury), which is equivalent to 10,000 feet pressure altitude.
Ambient pressure (flight altitude)	This is the pressure outside the aircraft (aircraft's pressure altitude). Maximum flying altitudes for aircraft are based primarily on the limits of its oxygen system.
Pressure differential	This is the difference between ambient pressure and cabin pressure. A typical pressure differential for a single/dual-place aircraft is 5.0 psi. For instance, if the ambient pressure altitude is 35,000 feet or 3.36 psi, then the cabin pressure altitude will be 14,500 feet or 8.46 psi. (8.46 – 3.36 = 5.10 psi). Multi-place aircraft maintain a higher pressure differential because of mission requirements and passenger comfort. Their cabin altitude is maintained at about 8,000 feet or 10.9 psi.

Isobaric control

Everyone who has flown in a commercial airliner has experienced this type of pressurization schedule. Cabin altitude normally remains between 5,000 and 8,000 feet during the flight, allowing passengers to breathe air while moving freely about the cabin. Figure 1–1 is a typical cabin altitude profile during a flight. Cabin altitude gradually increases to about 8,000 feet during the first 15 to 20 minutes of flight. Cabin altitude gradually decreases as the aircraft descends, about 25 to 30 minutes before landing.

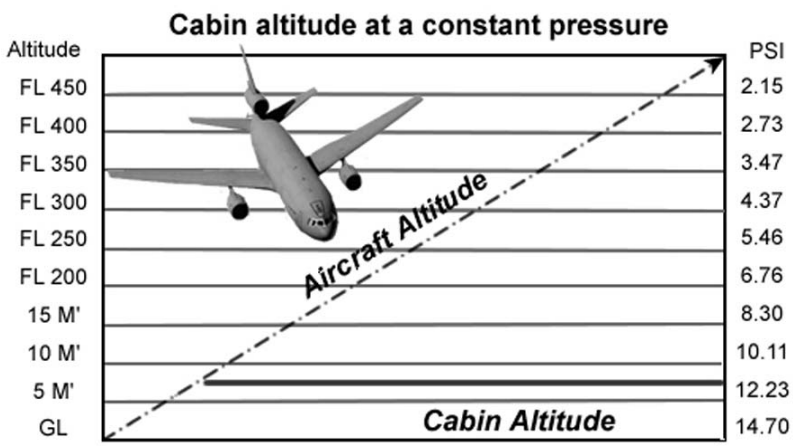

Figure 1–1. Isobaric pressure control.

Onboard computers determine the rate of change in cabin altitude. Departure and arrival field elevations are manually entered into the computer; the computer controls the cabin altitude and pressure change rate inside the cabin on ascent and descent. On commercial aircraft the pressure change rate is normally between 300 to 500 fpm. This rate is low to provide maximum passenger comfort.

Examples of this pressurization schedule are found in a number of military multi-place transport and cargo aircraft, as well as most civilian airliners. The KC–10 aircraft uses this pressurization control,

maintaining a pressurized cabin slightly greater than ambient up to 8,000 feet throughout the aircraft's certified ceiling. By certified ceiling we refer to the maximum altitude the aircraft is capable of flying while maintaining this cabin pressure. The KC–10s cruise altitude may be 35,000 feet; however, passengers and aircrew do not exceed a pressure altitude (cabin altitude) of 8,000 feet.

Pressure differential is the limiting factor of an isobaric pressurization system. Once the cabin reaches its isobaric (constant) pressure, a pressure differential is created between the inside and outside pressure as the aircraft ascends to higher altitudes. For example, an aircraft with a flight altitude of FL 260 (5.22 psi ambient pressure) and a cabin altitude of 8,000 feet (10.9 psi cabin pressure) has a pressure differential of 5.69 psi. Each aircraft has a maximum safe pressure differential. For example, a common pressure differential for larger volume aircraft is 8 to 9 psi. These aircraft can fly at extremely high altitudes pressurized at 8,000 feet. However, there are limitations to any pressurization system.

A C–17 Globemaster III flying an evacuation mission may be required to transport a DCS patient while maintaining SL (14.7 psi) equivalent cabin altitude. FL 210 is its maximum attainable altitude while still providing SL pressure; flying higher than FL 210 exceeds its maximum normal pressure differential. Maximum pressure differential limitations must not be exceeded because the aircraft can safely withstand only so much internal pressure. The way a balloon will rupture if too much air is forced into it; the same is true for an aircraft.

It is not feasible for fighter (F–22 Raptor) or attack (A–10 Thunderbolt II) aircraft to maintain cabins at such a low-pressure altitude because of their altitude capabilities and mission requirements. Doing so would sacrifice aircraft range due to added weight needed in the structure of the fuselage. The potential for a loss of cabin pressurization is also much greater in combat aircraft. Decompression effects can be severe if cabin pressure is lost in aircraft with a small cockpit. For these reasons, an isobaric-differential cabin pressurization system is employed on tactical (fighter/attack) aircraft.

Isobaric-differential control

With this particular pressurization schedule, cabin altitude varies with the changing flight altitude, although not at the same rate (fig. 1–2).

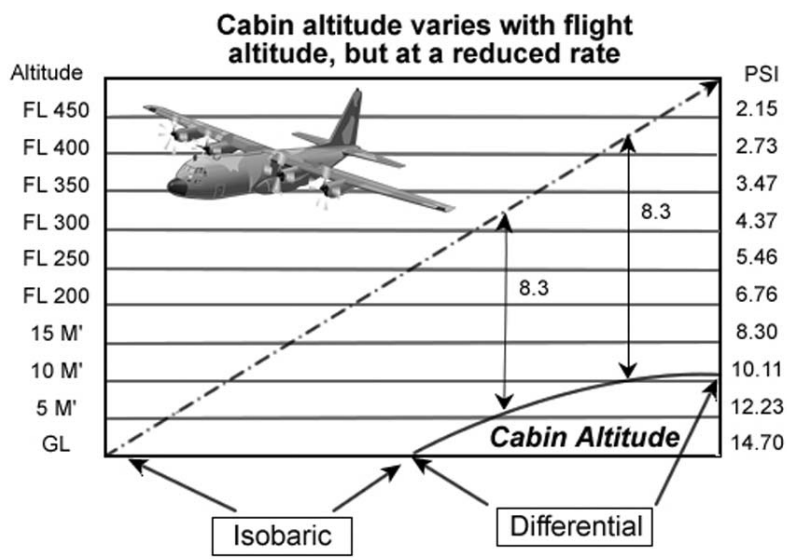

Figure 1–2. Isobaric-differential pressure control (large cabin).

An aircraft with an isobaric-differential pressurization schedule climbs to a predetermined altitude to attain a pressure differential equal to the maximum pressure differential allowed under normal operations. When the predetermined altitude is reached, a differential control component of the

pressurization system begins to maintain a pressure differential between cabin and ambient pressure. For example, the C–17 cabin altitude remains at SL equivalent pressure up to FL 210. The pressurization system control then switches to a differential mode at FL 210. The system maintains an 8.3 to 8.6 psi pressure differential up to the aircraft's certified operational ceiling.

The equivalent cabin pressure of an aircraft flying at FL 400 with an 8.6 psia (absolute pressure) differential should be 11.32 psi. Cabin pressure includes the 8.6 psi provided by the aircraft pressurization system and the 2.72 psi ambient pressure at FL 400. An 11.32 psia indicates an approximate cabin altitude of 7,000 feet.

Another example of an isobaric-differential control system is found in fighter aircraft (fig. 1–3). Most of these aircraft are without cockpit pressurization up to 8,000 feet. The cockpit remains at 8,000 feet, as the aircraft continues to climb, until the pressure differential reaches 5.0 psi. This pressure differential of 5.0 psi is maintained up to the aircraft's certified ceiling, resulting in increased cabin altitude as flight altitude increases. Cabin altitude does not increase as fast as the ambient altitude once the pressure differential is reached.

It is important for cabin altitude to remain at or below 23,000 feet if the aircraft ascends to 60,000 feet. At FL 230 it is considered below the acute hypoxia zone and protects aircrew from DCS. Aircrews in tactical aircraft use oxygen equipment throughout flight because there is always a threat of losing pressurization. The pressure differential is kept as low as possible to reduce the rates of pressure change when ascending or descending.

Some tactical aircraft isobaric differential systems employ both types of pressurization schedules. The cabin remains unpressurized from ground level (GL) to about 8,000 feet. Cabin altitude then remains at 8,000 feet while aircraft ascend from 8,000 to 23,000 feet; that is the *isobaric* portion of the pressurization schedule. The pressurization system then maintains a 5.0 psi differential as the aircraft passes through about 23,000 feet; that is the *differential* portion of the pressurization schedule.

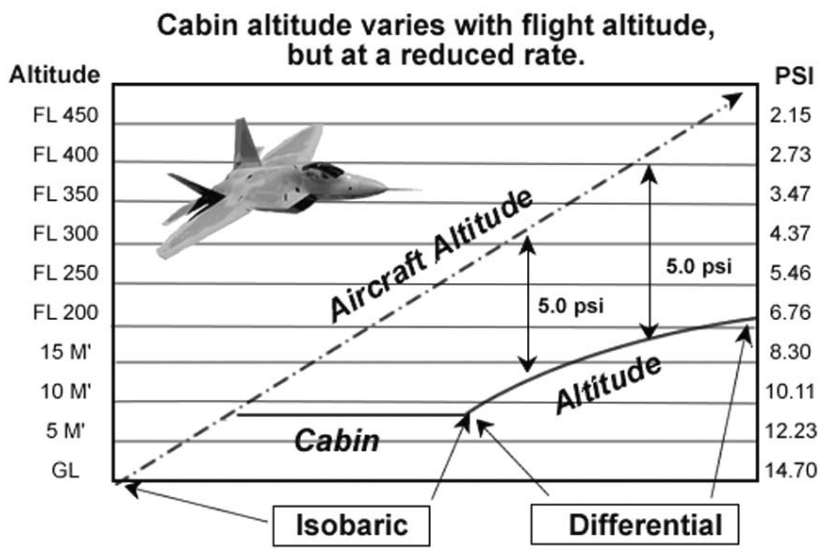

Figure 1–3. Isobaric-differential pressure control (small cabin).

603. Cabin decompression characteristics

As we said earlier, the major disadvantage of pressurization systems is the possibility for the system to fail. Now that you have an understanding of how pressurization systems work, we will learn what could go wrong. You will first look at the causes of cabin decompression, followed by the different

types of decompressions. Last, you will take a look at the factors that affect the time, rate, and severity of a decompression.

Causes of cabin pressurization failure

Pressurization system failure can be attributed to one of three reasons: reduced cabin air inflow, pressure control system failure, and structural failure.

Reduced cabin air inflow

Single-place aircraft are more likely to experience problems in reduced cabin air inflow resulting from engine flame out or compressor malfunction. Multi-place aircraft draw air from all the engines or from two or more engine-driven compressors. Other causes of inflow failure include unserviceable air conditioning system parts, like for example the cabin inlet valve may stick open. The aircrew may manually override multi-place aircraft systems if toxic fumes are drawn into the cabin or as part of ground egress drills. Pressure-cabin design allows for a minimal leak, and continued maintenance ensures system capability.

Pressure control system failure

This failure occurs when the pressure controller malfunctions or when the cabin discharge valves stick open (excessive discharge). This occurs more frequently in single-place aircraft because there is normally no duplication of the pressure control system. The pressure differential rapidly falls to zero when discharge valves stick in the full open position.

Pressurization system parts redundancy (duplication) and an independent system for closing discharge valves maintain multi-place aircraft cabin pressure. These systems ensure cabin differential pressure does not fall significantly.

Structural failure

Structural failure can range from impaired or malfunctioning doors, canopies, or escape hatch seals to the loss of a door, canopy, or escape hatch. Window disintegration, canopy or door loss, or gross structural failure can cause severe damage and physical injury. In any case, the inflow of air has an effect in cabin pressurization. The larger the defect or opening the lesser the effect of the inflow of air. A small defect will cause a high current/surge of inflow air causing the cabin pressure to remain 5,000 to 10,000 feet below ambient altitude. For example, an aircraft losing a window at FL 350 may have a cabin altitude of 25,000 to 30,000 feet as a result of the increased inflow air.

The loss of a hatch can result from inadequate preventive maintenance or rushed preflight or takeoff procedures. Other causes of structural failure include mechanical failure (faulty seal), excessive stress (high G (gravitational forces) maneuvers), sabotage, or enemy action. Metal fatigue is considered a potential cause of structural failure because of the extended service life of both military and commercial aircraft. More stringent inspections on older planes detect possible metal fatigue early and improve the safe operation of the aircraft.

The design of military aircraft hatches, doors, and cockpit canopies must allow them to be jettisoned during emergency procedures. The likelihood of mechanical failure of these systems can also cause the accidental loss of those same doors, hatches, and cockpit canopies during flight. Usually, the aircrew and passengers survive cabin pressurization failure without any side effects. Most deaths occur because of massive cabin structure failure due to metal fatigue. Below are some real life examples of incidents caused by loss of pressurization:

- Japan Airlines' Boeing 747 suffered structural failure of its rear pressure bulkhead in 1985 resulting in an explosive decompression. The damage to the aircraft severed the hydraulic system and the flight crew was unable to control the aircraft. There were only four survivors out of 524 occupants.

- In 1988, a Boeing 737 from Aloha Airlines suffered an explosive decompression due to metal fatigue which resulted in a large section of the roof being torn off. Out of the 95 occupants, the only fatality was a flight attendant who was blown out of the aircraft.
- China Airlines' Boeing 747–200B, disintegrated while climbing to cruising altitude in 2002. It suffered a decompression caused by metal fatigue as a consequence of a faulty repair about 22 years earlier. All 225 occupants died.
- In 2005, a Boeing 737 from Helios Airways underwent a slow decompression and crashed in Greece killing all 121 people on board. It is believed that the automatic pressurization system was disabled and the pilots became unconscious.
- A Boeing 747 from Qantas Airways went through a rapid decompression in 2008. In this case it was due to an explosion of one of the oxygen cylinders from the cargo hold area which punctured the passenger cabin and exited the aircraft through the fuselage. Fortunately, all 365 occupants survived.
- In 1989, a Boeing 747–122 from United Airlines lost its forward cargo hold door, resulting in an explosive decompression. Out of the 355 passengers, there were nine fatalities; they were ejected from the airplane and lost at sea (fig. 1–4).

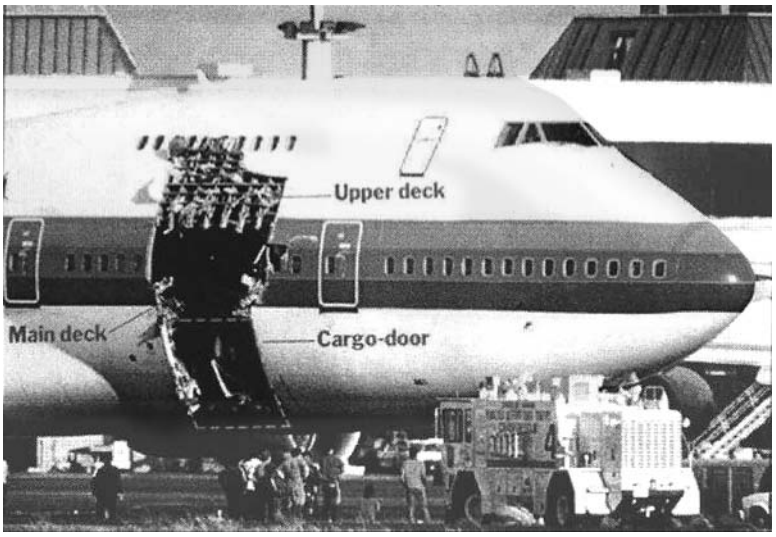

Figure 1–4. United Airlines aircraft decompression.

Cabin altitude profiles

The single-place aircraft pilot usually begins an immediate descent to reduce the hazards of a low-pressure environment (hypoxia, DCS, gas expansion, etc.). In accordance with AFI 11-202, Volume 3, this is normally FL 250 or below, if possible. Multi-place aircraft decompressions are usually slow compared to single-place aircraft decompressions. The pilot may begin a descent well before the decompression is complete. The maximum cabin altitude may be considerably less than the ambient pressure altitude of the aircraft.

Types of decompressions

Cabin decompressions fall into one of two categories: rapid or slow.

Rapid decompressions

Rapid decompressions can be further classified as either explosive or rapid. *Explosive decompressions* occur in tenths of a second. This type of decompression occurs when there is a large

opening in the canopy or fighter aircraft structure, or when the canopy is lost. A *rapid decompression* lasts about one to three seconds. The Air Force rapid decompression (RD) accomplished in the altitude chamber falls into this category. Explosive noise, flying debris, fogging, and a decrease in temperature and pressure are all characteristics of an RD. We will discuss those characteristics later in this unit.

Slow decompressions

Slow decompressions last from more than three seconds to several minutes; they can happen in any aircraft equipped with a pressurization system. Damaged canopy seals in fighter aircraft can cause a pressure loss in several seconds. Damaged cargo door seals in multi-place aircraft may extend cabin decompression over several seconds or minutes. Although a slow decompression may take seconds or minutes to occur, the primary danger lies in the insidious onset of hypoxia. Decreases in temperature and pressure, and occasionally fogging characterize a slow decompression. The following information enables aircrews to recognize a slow decompression and begin corrective procedures.

A decrease in cabin *temperature* may be detected if the decompression occurs over a short time. The longer the decompression, the more likely the air conditioning system will sense the temperature decrease and compensate for the difference.

A decrease in cabin *pressure* is the most dependable characteristic of a slow decompression. The decrease affects everyone in the aircraft and usually manifests itself in the equalization of pressure within the middle ear. All aircraft occupants experience a *popping* or *clicking* sensation as the middle ear pressure equalizes.

The sinuses, teeth, and GI tract are other areas affected by gas expansion. Occasionally, aircrew and passengers may be slightly congested and sinus openings constrict because of the tissue swelling. As a result, air escaping through the constricted openings tends to sound like a hinge on a squeaky door. Gas expansion can also occur in a tooth due to an air pocket in a filling and cause pain. The pressure or pain occurs at a specific altitude on ascent and normally dissipates on descent. Pain felt in several teeth along the upper row normally indicates a referred sinus block. GI tract gas expansion manifests itself as belching and passing flatus but it is not the best indication of a decompression for obvious reasons.

Factors affecting the time, rate, and severity of decompressions

The decompression's effects on the body depend on the time and rate of the pressure change, and the pressure differential at the time when the decompression occurs. One of these factors cannot be discussed without including the others because of their close relationship. A decompression occurring over a small pressure range, in a short period of time, can severely damage the body. However, injuries may not result when the decompression occurs more slowly through a large pressure differential over several seconds. Obviously, decompressions occurring over a large pressure range in the shortest time produce the most severe effects. For better understanding let us define decompression time and rate:

- **Time of decompression** is the time required to completely decompress an aircraft to ambient pressure. An explosive decompression (less than one second) can have serious effects on the lungs' ability to vent the excess air. A rapid decompression of about one to three seconds reduces time of useful consciousness (TUC) as much as one-third to one-half, which increases the threat of hypoxia. However, the sudden nature of the pressure change usually gets the attention of aircrew members and warns them of the threat.
- **Rate of decompression** is the speed at which the cabin pressure and ambient pressure equalize. The maximum pressure differential the lungs can tolerate during a rapid decompression is 5 psi. A pressure differential greater than 5 psi can only be tolerated if the decompression rate can be controlled. The major factors that govern the onset rates of hypoxia and DCS following a decompression are cabin altitude and the decompression rate.

In review, decompressions vary widely depending on a combination of factors. Next we cover the factors controlling the degree of pressure reduction inside the aircraft following a decompression.

Cabin volume

The larger the cabin, the slower the decompression—assuming all other factors are equal. Cabin volume depends on the size of the cabin. In a larger cabin, more air needs to escape and more time is required to decompress to ambient pressure. A smaller cabin requires less time to decompress to ambient pressure.

The following examples depict the decompression times calculated with cabin altitude of 8,000 feet, ambient altitude of FL 220, and structural defects (opening) of 10 inches in size.

Cabin	Volume	Time to decompress
Fighter aircraft	50 cubic feet	.11 seconds
Cargo aircraft	10,000 cubic feet	21.9 seconds
Chamber's lock compartment	368 cubic feet	.8 seconds *

NOTE: The altitude chamber RD (butterfly) valve is preset; therefore, an Air Force RD takes one to three seconds and the Federal Aviation Administration (FAA) RD takes 12 to 20 seconds.

As you can see, the volume of the cabin plays a big factor in determining how long a decompression will take. From the example above, if that same cargo aircraft were to lose a 12 squared foot cargo door instead, it would take only 1.5 seconds to decompress.

Size of the opening

The larger the opening or defect, the faster the decompression occurs. The relationship between the volume of the cabin and the size of the opening is what determines decompression *rate* and *time*. If a Boeing 747 loses a window versus a cargo door, the restriction of air escaping through the window takes longer, reducing the decompression rate. However, air escaping through a cargo door, which is a larger area, allows the air to escape with little or no restriction. As a result, the decompression occurs faster and with greater severity. The larger the opening or defect in the cabin, the faster the decompression.

Flight altitude

The higher the altitude, the greater the pressure differential and the longer the time it takes to decompress the aircraft. The physiological reaction to an RD, particularly the onset of hypoxia and its effects is directly influenced by the altitude at which the decompression occurs.

Pressure differential

The greater the differential, the more severe the decompression force. The initial difference between the cabin pressure and ambient pressure influences the rate and severity of a decompression. However, the force at which a cabin decompresses is not constant, but continually changes as the decompression continues. The decompression begins at zero seconds. It builds up almost instantly to its peak flow rate from this point. Once the peak flow rate has been attained, the decompression gradually decreases its flow to zero as it proceeds to completion. On the other hand, the time is the total elapsed time from the start and finish of the decompression.

Pressure ratio

The cabin pressure divided by ambient pressure determines pressure ratio. The greater the ratio, the longer the decompression takes. The ratio increases as altitude increases (maintaining the same pressure differential). The relationship of ratio, volume, and size of the opening are the principal factors in determining the rate, time, and severity of a decompression.

Self-Test Questions

After you complete these questions, you may check your answers at the end of the unit.

601. Methods of pressurization

1. What AF instruction states the altitude limits for unpressurized aircraft?

2. What is the definition of cabin pressurization?

3. In a conventional method of pressurization, what device is used to force ambient air into the aircraft?

4. At what psi is the difference between cabin and ambient pressure normally maintained? Why?

5. What is the purpose for the flow controller valves in an aircraft pressurization system?

6. Which valve is used to keep air entering the cabin from reentering the delivery lines?

7. What valve is useful in combat aircraft to reduce the effects of smoke and fumes in the cockpit?

8. What will occur if the overflow valve remains on or sticks open?

9. When may a safety valve activate?

10. What is the problem with a pressurization system functioning at higher altitudes?

11. To what altitude does the effectiveness of mechanical compressors becomes limited?

12. At FL 750, what is the temperature of compressed air to maintain cabin pressure at 10,000 feet?

13. What are the three categories for the cause of a mechanical failure of a pressurized cabin?

14. When is oxygen equipment usually used on multi-place aircraft?

15. What is protected when the cabin pressure increases slowly in a controlled manner?

16. Why does aircraft performance and fuel efficiency decrease because of a pressurization system?

17. What are some of the contaminants that are removed and controlled by the pressurization system during normal operations?

18. What are two problems with using a conventional pressurization system above FL 800?

19. What type aircraft is most recognized as using a sealed cabin pressurization system?

20. Why must the air used in a sealed cabin constantly go through purification?

602. Pressurization schedules

1. What are the two types of pressurization schedules?

2. Define ambient pressure.

3. Define pressure differential.

4. On commercial aircraft, the cabin altitude normally remains between which altitudes?

5. On commercial aircraft, what should be the rate of pressure change per minute?

6. What type aircraft incorporates an isobaric pressurization schedule?

7. What is the limiting factor of an isobaric pressurization system?

8. What type of patient may require evacuation while maintaining the cabin altitude at sea level?

9. What will occur if too much air is forced into an aircraft?

10. When using an isobaric-differential pressure control schedule, what happens to the cabin altitude during flight?

11. What type of pressurization schedule allows for aircraft to fly without pressurization up to 8,000 feet?

12. Once a fighter exceeds 8,000 feet, what occurs on ascent to higher altitudes?

13. Why is it important to maintain cabin altitude at or below FL 230?

14. Why do aircrews in tactical aircraft use their oxygen equipment throughout flight?

603. Cabin decompression characteristics

1. What are the three reasons of pressurization system failures?

2. How does a single-place aircraft usually experience a reduction in cabin air in-flow?

3. What is the cause of most deaths during a decompression?

4. What altitude should a single-place aircraft descend to following a decompression?

5. What are times for an explosive and rapid decompression?

6. What is the most dependable characteristic of a slow decompression?

7. How can someone recognize a pressure drop within an aircraft?

8. Define rate of decompression.

9. What are the major factors that govern hypoxia and decompression sickness onset rates following a decompression?

10. What are the factors that determine the degree of pressure reduction inside the aircraft?

11. How does the pressure differential affect a decompression?

12. What are the principal factors which determine the rate, time, and severity of a decompression?

1–2. Effects of a Decompression

The consequences of decompressions in both military and civilian aircraft have not received a high level of interest in recent years, due to the dependability of cabin pressurization systems and the availability of automatic warning devices. However, research shows that 80 percent of pilots with no experience of a decompression wait as long as 15 seconds to respond correctly to a loss of cabin pressure. As we discussed earlier, both rapid and slow decompressions have inherent threats. It is imperative that aircrews be able to recognize both the physical indications and physiological effects of a decompression.

604. Physical and physiological effects of a decompression

The seriousness of a decompression is determined by its potential to cause various physical and physiological problems. As we will see next, there are indicators we can observe that will let us know when a decompression has occurred. In addition to recognizing a decompression, we must understand what effects it has on our bodies. It is critical for aircrew members to recognize both the physical indications and physiological effects of a decompression.

Physical indications

Even though we conduct rapid decompressions in the hypobaric chamber, we cannot duplicate all the physical indications which can occur in an aircraft. Here you will learn about the physical effects a decompression can cause.

Explosive noise

The sudden release of pressure causes a loud noise. The compressed air in the cabin rapidly streams out of the cabin through the defect until the pressure equalizes. Although the noise created during a decompression can be produced by structural failure, it can also be created by the sudden change in pressure. When two different air masses make contact, it creates noise. The severity of the decompression determines the amount of noise.

Not all rapid decompressions make a big loud noise when the two air masses collide. Some create only a *swoosh* sound that may or may not be heard over the drone of aircraft engines. Although it is very likely noise may be present during a decompression, do not rely on it as the best indication of a decompression.

Flying debris

The violent rush of air out of the cabin may be strong enough to hurl loose equipment through the cabin. Items not secured move with the air mass as it moves from the high pressure area to the low pressure area. These items can include anything from pens, maps, charts, bags, to oxygen equipment; and depending upon the size and location of the opening, seated passengers as well. Also, stirred dust can impair the vision of all occupants.

Fogging

Air at any temperature holds water vapor. Cabin fog results when the air releases water vapor as the pressure decreases. When an RD occurs, the temperature and pressure are reduced; as a result, the water vapor condenses and forms fog. This fogging has occasionally been mistaken for smoke or fumes in multi-place aircraft, especially if there are no other indications of a slow decompression. Regardless of what it appears to be, aircrew must protect themselves by donning their oxygen equipment. The mist or fog formed by water vapor condensation tends to dissipate fairly quickly in small cabins, but it may take longer in multi-place aircraft.

Decreased temperature

Ambient temperature gets colder as altitude increases. Although cabin temperature is generally maintained at a comfortable level, it can drop rapidly when an RD happens. The wind blast increases the effects of cold temperatures at altitude. Cold temperatures and wind blast exposure can cause rapid cold injury to exposed skin (frostbite) and a rapid reduction of body temperature (hypothermia). Vision can also be affected by the flow of cold air into the eyes. The exhalation valves of oxygen masks may become obstructed because of possible ice formation.

Decreased pressure

A rapid drop in pressure can be expected when an RD occurs. Aircrew can recognize this pressure drop by feeling a popping or clicking effect in their middle ears, gas expansion in their GI tract, and possible rush of air from the lungs. The earlier they recognize a decompression, the sooner they can combat the physiological hazards.

Physiological effects

The following subparagraphs will explain the physiological effects of decompression. In other words, the effects we can feel in our bodies as a result of a decompression.

Gas expansion

As you may remember from volume 2, gases expand according to Boyle's law. Gas expansion affects semi-closed cavities such as the lungs, middle ear, and sinuses. Closed cavities, such as the GI tract and teeth, are also affected.

Lungs

Because of the relatively large volume of air normally contained in the lungs, the delicate nature of the pulmonary tissue, and the intricate system of alveolar airways for ventilation, the lungs are the most vulnerable to injury during a rapid decompression. Whenever a decompression is faster than the inherent capability of the lungs to decompress, positive pressure builds up in the lungs. If the escape of air from the lungs is blocked or seriously impeded, it is possible for a dangerously high pressure to build up and over distend the lungs and thorax.

No serious injuries have resulted from rapid decompressions with open airways, even while wearing an oxygen mask. Maintaining an open airway significantly reduces the chance of lung damage during a decompression. But, disastrous or fatal consequences can result if a person's airway is blocked, such as holding their breath. Under this condition, when the air in the lungs cannot escape, the lungs and thorax become over-expanded by the excessive pressure. This can cause actual tearing and rupture of the lung tissues and capillaries. The danger is that this air, now in the form of bubbles, could enter the systemic circulation or could be lodged in such vital organs as the heart or brain.

Ears and sinuses

Since the ears and sinuses vent off pressure automatically during ascent, they are not a major concern during decompressions. There is always a possibility of experiencing a blockage in those areas, but aircrew members and passengers in aircraft are more likely to experience discomfort or pain during a rapid descent after the decompression.

Gastrointestinal tract

GI tract problems are minimal when the cabin pressure remains below FL 250. Individuals develop discomfort and pain above FL 250 due to stomach and intestine gas expansion. The abdominal discomfort or pain during rapid decompressions is usually no more severe than that which might occur during a slower decompression. Nevertheless, abdominal distention can have some uncomfortable effects. The diaphragm can be displaced upward by the expansion of trapped gas in the stomach, retarding respiratory movements. If severe enough, it can also cause a reduction in blood pressure, shock, and unconsciousness. Usually, passing the excess gas will relieve this discomfort.

Decompression sickness

A pressurized cabin protects us against DCS. Typically, DCS does not occur until the cabin reaches altitudes above FL 180. DCS becomes significant when cabin altitude rises to at least FL 250 to FL 300. The longer the crew member is exposed to the unpressurized environment, the higher the incidence of DCS.

Hypoxia

Hypoxia is by far the most severe physiological hazard associated with a decompression. The TUC of aircrew members and passengers depends on the cabin's final altitude following a decompression. The most critical need is oxygen, especially if the cabin altitude was below 10,000 feet before the decompression and passengers were not breathing oxygen. According to Dalton's law, a reduction in ambient pressure decreases the partial pressure of oxygen in the inspired air. During an RD, the instantaneous exposure to a higher altitude results in a reversal of the pressure gradients in the alveoli. The partial pressure of oxygen in the alveoli is now less than the partial pressure in the blood and, in accordance with the law of gaseous diffusion, oxygen moves from the blood into the alveoli and is exhaled. Remember that your time of useful consciousness can be reduced by as much as one-third to one-half during a rapid decompression. At FL 300, if supplemental oxygen is not used within 30

seconds after the RD, a person can lose consciousness. Again, the need and timely use of supplemental oxygen cannot be overemphasized.

605. Precautionary and corrective procedures

What can aircrew members do to protect themselves before, during, and after a decompression? As an Aerospace Physiology instructor this is where you play a vital role. The answers are provided in this lesson. Decompressions usually occur with little or no warning; therefore, aircrew members must always be prepared.

Protective measures taken before a decompression

There are five protective measures aircrew members can adopt to face the possibility of a decompression: personal diet, a clean cabin, individual oxygen equipment, flight clothing, and actions by other aircrew members. The more informed each aircrew member is the more efficiently he or she will perform in adverse conditions resulting from a decompression.

Personal diet

GI tract gas expands about eight times at FL 400 if exposed to an unpressurized environment. Physical effects can range from mild pain to unconsciousness, depending on the location of the expanding gas. Although there are many variables such as the type of foods consumed and the activity level of the individual, etc., it is suggested aircrew members pay closer attention to what they eat approximately 8 to 12 hours before flight. What we have learned about gas expansion at altitude illustrates the importance of aircrew members eating healthy and avoiding gas-forming foods.

Clean cabin

Aircrew members should secure equipment when it is not in use. Equipment may include items as simple as pens, pencils, charts, checklists, to oxygen or personal equipment. Pens and pencils can become deadly projectiles during a decompression, and flight charts can block the pilot's view of aircraft flight instruments. A pilot has little time to worry about a chart blocking his or her view when a decompression occurs.

Individual oxygen equipment

The *emergency* use of oxygen equipment is covered under "*E*" in the PRICE check. Aircrew members must be familiar with equipment types, location, and operational limitations. They must understand the importance of quick action because TUC is reduced even more during decompressions at high altitudes. Aircrew members flying frequently on different types of aircraft must be familiar with each aircraft's oxygen equipment.

Flight clothing

An area that can sometimes be easily overlooked is flight clothing. Not only does flight clothing protect aircrew members from fire hazards aboard the aircraft, but it also protects an individual in cold environments. We need to remember that the ambient temperature at FL 350 is approximately –67° F (–35° C), and it is not uncommon for military aircraft to fly near or above this altitude. Therefore it is important to emphasize to the crew member the need to be prepared for cold temperatures not only during a crash landing in cold climates, but also for the possibility of a decompression at high altitude. Items which should be considered include but are not limited to the flight jacket, flight gloves, flyer's thermal underwear, and flyer's scarf.

Actions by other aircrew

Aircrews are quickly accounted for when they are in or near their assigned work stations. Moving about the aircraft may place them in additional danger during a decompression. This is due to the fact that they will not have immediate access to their personal oxygen equipment located at their designated flight stations. Aircrew may become unconscious due to hypoxia unless they are carrying portable equipment.

Aircrew also could be forced out of the aircraft depending on the size and location of the opening. Therefore, aircrew should secure themselves in place to avoid this danger while at their flight stations.

Actions during a decompression

Besides using precautionary procedures for the possibility of a decompression, we must consider what to do if it does happen. There are two aspects to keep in mind: securing yourself inside the aircraft and controlling your breathing.

Security

Properly using a lap belt minimizes physical injury resulting from impact with moving objects and being tossed about the cabin, and reduces the threat of being expelled, extracted, or being blown about the aircraft. Little danger of expulsion from aircraft exists when aircrew members are secured in their seats. As previously stated, most decompressions happen quickly, and expulsion is dependent on the size of the opening and where the person is located in relation to the opening.

Breath control

Lungs can tolerate the physiological effects of a decompression with little or no injuries. Decompressions usually happen quickly and prevent aircraft occupants from holding their breath, particularly during rapid decompressions. However, the possibility exists for someone to hold his or her breath during a slow decompression. The importance of maintaining an open airway must be stressed to both aircrew members and passengers. Closing the airway increases the chance of a pneumothorax.

Actions after a decompression

The actions taken by aircrew members and passengers following a decompression are extremely important. Aircrew members and passengers have complete control over three items: using and breathing 100 percent oxygen, checking equipment, and checking other occupants.

Oxygen

Oxygen comes in different storage containers and delivery systems for passengers. The pilot in command must ensure each crew member and passenger are briefed about the type, location, and use of onboard equipment. Oxygen equipment can include passenger oxygen kits (POK), emergency passenger oxygen system (EPOS), drop-down passenger oxygen masks, and emergency escape breathing devices.

Aircrews use portable low-pressure oxygen assemblies and masks. Remind aircrew members that oxygen pressure quickly decreases as activity increases. If using rechargeable oxygen assemblies, they need to know the location of recharge valves throughout the aircraft so they can refill them as necessary.

Check equipment

Once a decompression has occurred and aircrew members have donned their equipment, they must perform a PRICE check as well as an intercom check. After determining their own equipment is functioning properly, aircrew members should then help passengers with their equipment.

Check other aircrew

Aircrew members must accomplish an intercom check with one another after a decompression, alerting crew members if someone needs help or is incapacitated. Aircrew members can help passengers after the intercom check.

Immediate descend

Descending as quickly as possible is the final step in the recovery process. The pilot must descend to the lowest practical altitude (preferably FL 180, but no higher than FL 250) and ensure that all

occupants are using supplemental oxygen. If anyone does not have functioning oxygen equipment, the aircraft should descend to 13,000 feet. The pilot may be unable to descend immediately because of other aircraft in the area. Once the pilot informs the control tower of the emergency, the tower will clear a flight path, allowing the aircraft to descend to a lower altitude.

The tower also alerts the flight surgeon's office after the pilot has declared the in-flight emergency. The flight surgeon meets the aircraft and determines the crew members' conditions. Medical technicians transport aircrew and other active duty personnel to the nearest medical facility for treatment or observation if additional care is necessary. Civilian passengers are transported to the closest medical facility with a flight medical examiner.

Self-Test Questions

After you complete these questions, you may check your answers at the end of the unit.

604. Physical and physiological effects of a decompression

1. What are some physical indications of a decompression?

2. What creates the noise during a decompression?

3. What might happen to loose equipment in the cabin during a decompression?

4. What causes the fogging effect during a decompression?

5. What factors of a decompression determine cabin/cockpit temperature?

6. Why are the lungs potentially the most vulnerable part of the body during a decompression?

7. What significantly reduces the chance of lung damage during a decompression?

8. When are crew members or passengers likely to experience problems with ears and/or sinuses following a decompression?

9. The occurrence of decompression sickness after a decompression becomes significant if exposed to what altitude?

10. What effect can a rapid decompression have on your time of useful consciousness?

605. Precautionary and corrective procedures

1. What are the five factors that directly affect aircrew during a decompression?

2. How many times greater is expansion of gases in the gastrointestinal tract at FL 400?

3. What are the hazards of unsecured pens, pencils, charts, and checklists during a decompression?

4. If used properly, what can significantly minimize your chances of physical injury during a decompression?

5. What must be stressed to aircrew members and passengers in order to prevent lung damage during a decompression?

6. What three things do both aircrew members and passengers have control over following a decompression?

7. What should aircrew members do following a decompression?

8. To what altitude should an aircraft descend following a decompression if all occupants do not have supplemental oxygen?

Answers to Self-Test Questions

601

1. AFI 11–202, Volume 3.
2. A method of maintaining cabin (interior) pressure greater than ambient (exterior) pressure.
3. Compressor.
4. Between 7.5 psi and 8 psi. A higher psi would limit the structural life of the aircraft.
5. Controls the flow of air going through the cabin.
6. Non-return valves.
7. Ram air inlet valve.
8. Loss of pressurization.
9. When the aircraft exceeds its maximum pressure ratio and the discharge valve fails to open.
10. The air becomes so thin that it is impossible for the compressor to supply enough air to pressurize the cabin.
11. FL 800.
12. 600° F.
13. Maintenance deficiencies, defective parts, and human error.
14. When there is a loss of pressurization, fire, and smoke and/or fumes.
15. It protects from the ear and sinus blocks.
16. Because the pressurized cabin area requires increased structural weight and strength to maintain pressure.
17. Carbon dioxide, water vapor, and odors.
18. Heat produced trying to compress the air and drawing in enough air to maintain cabin pressure.
19. High altitude aircraft and spacecraft.
20. Because there is a limited supply of gases on board.

602

1. Isobaric and isobaric-differential.
2. The pressure outside the aircraft.
3. The difference between ambient pressure and cabin pressure.
4. 5,000 and 8,000 feet.
5. Between 300 and 500 feet per minute.
6. Military multi-place cargo and transport aircraft and most and civilian airliners.
7. Pressure differential.
8. A patient with decompression sickness.
9. The aircraft will rupture.
10. The cabin altitude varies with changing flight altitude, although not at the same rate.
11. Isobaric-differential found in most fighter aircrafts.
12. The cockpit remains at 8,000 feet until the pressure differential reaches 5.0 psi.
13. FL 230 is considered below the acute hypoxia zone and protects aircrew from DCS.
14. Threat of loss of pressurization.

603

1. Reduced cabin air inflow, pressure control system failure, and structural failure.
2. Engine flame out or compressor malfunction.
3. Massive cabin structure failure due to metal fatigue.
4. FL 250 or below.
5. Tenths of a second, one to three seconds.

6. A decrease in cabin pressure.
7. Middle ears pop or click and gas expansion in sinuses, GI tract, and teeth.
8. The speed at which cabin pressure and ambient pressure equalize.
9. Cabin altitude and decompression rate.
10. Cabin volume, size of the opening, flight altitude, pressure differential, and pressure ratio.
11. It influences the rate and severity of a decompression; the greater the differential, the more severe.
12. The relationship of ratio, volume, and size of the opening.

604

1. Noise, flying debris, fogging, decreased temperature, and decreased pressure.
2. The contact of two air masses.
3. Items not secured may be hurled through the cabin and out the opening.
4. It is caused when air releases water vapor and it condenses as the pressure decreases.
5. Ambient temperature and wind blast.
6. Because of the large volume of air, delicate nature of pulmonary tissue, and the intricate system of alveolar airways for ventilation.
7. Maintaining an open airway.
8. During a rapid descent after the decompression.
9. Cabin altitude of at least FL 250 to FL 300.
10. It can reduce it by one-third to one-half.

605

1. (1) Personal diet, (2) clean cabin, (3) individual oxygen equipment, (4) flight clothing, and (5) actions by other aircrew members.
2. About eight times.
3. Pens and pencils can become deadly projectiles. Charts and checklists can block the pilot’s view.
4. A lap belt.
5. The importance of maintaining an open airway.
6. Using/breathing 100 percent oxygen, checking equipment, and checking others.
7. Don equipment, perform PRICE check, perform intercom check, and help passengers with their equipment.
8. 13,000 feet.

Do the unit review exercises before going to the next unit.

Unit Review Exercises

Note to Student: Consider all choices carefully, select the *best* answer to each question, and *circle* the corresponding letter. When you have completed all unit review exercises, transfer your answers to ECI (AFIADL) Form 34, Field Scoring Answer Sheet.

Do not return your answer sheet to the Extension Course Program (A4L).

1. (601) What is the operational ceiling for an unpressurized aircraft?
   a. FL 180.
   b. FL 250.
   c. FL 300.
   d. FL 350.

2. (601) What pressurization system controller maintains the pressure within the cabin?
   a. Safety controller.
   b. Pressure controller.
   c. Conditioner controller.
   d. Compressor controller.

3. (601) What valve within the pressurization system is used to prevent the cabin pressure from exceeding its limits?
   a. Ram dump.
   b. Compressor.
   c. Safety valve.
   d. Pressure valve.

4. (601) The *most* important advantage of a pressurized cabin is to
   a. reduce the possibility of hypoxia.
   b. ensure passenger and crew comfort.
   c. reduce the possibility of decompression sickness.
   d. reduce the possibility of hypoxia and decompression sickness.

5. (601) What is the *greatest disadvantage* of a pressurization system?
   a. Maintenance cost and repair.
   b. Added structure and weight.
   c. Possibility of pressurization loss.
   d. Reduced aircraft performance and payload.

6. (602) What is the *minimum* aircraft cabin pressure to prevent hypoxia?
   a. 375 mm Hg.
   b. 472 mm Hg.
   c. 523 mm Hg.
   d. 760 mm Hg.

7. (602) In a single- or dual-place aircraft, what is the typical pressure differential between cabin and ambient altitudes when using an isobaric differential pressurization schedule?
   a. 4.5 psi.
   b. 5.0 psi.
   c. 6.0 psi.
   d. 8.0 psi

8. (602) What is the limiting factor of an isobaric pressurization schedule?
   a. Fuselage size.
   b. Pressure ratio.
   c. Temperature control.
   d. Pressure differential.

9. (603) What determines the effect of inflow air during a decompression?
   a. Pressure ratio.
   b. Size of the cabin.
   c. Size of the opening.
   d. Pressure differential.

10. (603) What is the *most* dependable characteristic of a slow decompression?
    a. Fogging.
    b. Flying debris.
    c. Temperature change.
    d. Decrease in cabin pressure.

11. (603) What is the *maximum* pressure differential the lungs can tolerate during a rapid decompression?
    a. 5 psi.
    b. 7 psi.
    c. 9 psi.
    d. 10 psi.

12. (604) Which areas of the body can be affected by gas expansion during a decompression?
    a. Lungs, middle ears, sinuses, joints, teeth.
    b. Joints, middle ear, sinuses, gastro-intestinal, teeth.
    c. Lungs, middle ears, sinuses, gastro-intestinal, teeth.
    d. Cranial, middle ears, sinuses, gastro-intestinal, teeth.

13. (604) Which is considered by far *the most* severe high-altitude decompression hazard?
    a. Hypoxia.
    b. Temperature.
    c. Decompression sickness.
    d. Gastro-intestinal problems.

14. (605) What is the approximate temperature at 35,000 feet?
    a. 67 °F.
    b. 76°F.
    c. –67°F.
    d. –76°F.

15. (605) What is the *preferred* and *maximum* altitude an aircraft should be taken to following a decompression if all occupants have supplemental oxygen?
    a. 10,000 and FL 180.
    b. 10,000 and FL 250.
    c. 13,000 and FL 180.
    d. FL 180 and FL 250.

16. (605) The pilot in command is responsible for ensuring each crew member and passenger is briefed on which of the following items pertaining to on board oxygen equipment?
    a. Purging procedures.
    b. Physiological reactions.
    c. Manufacturer specifications.
    d. Type, location, and use.

Please read the unit menu for unit 2 and continue ➔

Student Notes

Unit 2. Aircraft Emergency Escape

2–1. Parachutes and their Components 2–1
606. Personnel parachutes and components 2–2
607. Class IV parachute harness, torso harness, and release devices 2–5
608. Personnel parachute inspections and storage 2–10
2–2. Ejection Seat Systems and In-flight Egress 2–13
609. Ejection seat systems 2–13
610. In-flight egress procedures 2–17
2–3. Parachuting Fundamentals 2–21
611. Principles of parachuting 2–21
612. Parachute malfunctions and handling procedures 2–24
613. Parachute landing procedures 2–28
2–4. Survival Factors and Equipment 2–37
614. Psychology of survival 2–37
615. Survival and signaling equipment 2–42
2–5. Crash Survival 2–52
616. Preflight precautions 2–52
617. Crash forces and body positions 2–54
618. Post-crash environment and egress procedures 2–56

THE IMPORTANCE of personnel parachutes to the military began in World War I with the use of powered aircraft for attack and reconnaissance missions. During the war, parachutes were fastened to the outside of the aircraft, requiring the flyer to climb into the harness and drop from the airframe. This system was awkward and of little use when the aircraft was spinning or out of control which put the flyer at risk of entanglement with the aircraft.

An Army Air Service research team made improvements to this basic parachute and by early 1919, designed a back-style parachute capable of being deployed at will using a ripcord after the flyer left the aircraft. The first time this system saved someone occurred in 1922, when Lieutenant Harold R. Harris jumped from his disabled aircraft. During descent he had difficulty finding his ripcord and fell 2,000 feet before he located the ripcord and opened his parachute only 500 feet above ground level. Lieutenant Harris became the first person in aviation history to use a manually operated parachute and survive an emergency egress from a powered aircraft. Since his jump, innovative parachute designs allow today's aircrews to bailout or eject safely with little fear of injury.

The improved performance and capability of today's parachutes allow for their deployment at greater speeds and at both higher and lower altitudes. It is important to have a thorough knowledge about parachutes, ejection systems, and how they operate. Understanding the various systems and equipment used for egress provides you with greater insight into the human factors involved in aircraft escape during emergency situations or non-emergency situations.

2–1. Parachutes and their Components

The information in this section enables you to carry out a variety of duties that are essential to the 4M0X1 career field to include instructing classes on emergency egress and survival and conducting demonstrations for aircrew members and parachuting personnel. Aircrew can wear a parachute (personnel parachute), the parachute may be installed in the ejection seat, or stowed in the aircraft for

emergency egress. In this section we discuss personnel parachutes and their components, different types of harnesses, and parachute inspections.

606. Personnel parachutes and components

The USAF uses two basic styles of personnel parachutes: chest-style and back-style. The chest-style is used in very limited situations and therefore is not discussed in this volume. The back-style parachute is used in all ejection seats and consists of a lightweight material that adjusts easily to each user (fig. 2–1). This parachute contours to the body, increasing wearer's comfort and fit. The back-style parachute incorporates an altitude sensing device designed to deploy the parachute at a preset altitude. It also has a manual means of deploying the parachute; that gives the user the option of opening the parachute before the preset altitude, or provides a backup in case the automatic opening device fails. It offers the ability to attach accessories such as the survival kit. In this lesson we cover the three major components of the back-style parachute: the canopy, the pack, and the harness. We also discuss the different automatic ripcord releases that are essential parts of the complete parachute system.

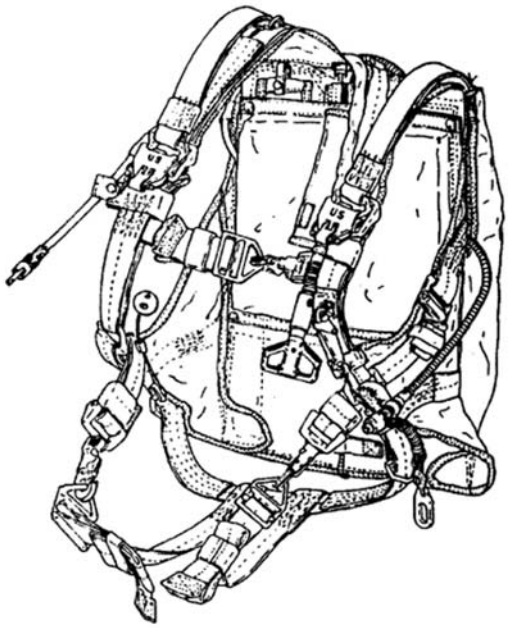

Figure 2–1. Back-style personnel parachute.

Parachute canopy

The C–9 canopy is used in the back-style parachute (fig. 2–2). The fabric used to construct the parachute canopy is a lightweight but strong *rip-stop* nylon material that is resistant to mildew. Although the material weighs only 1.1 ounces per square yard, it can support 1,500 pounds of direct tension. It has a flat circular shape of 28 feet in diameter, and has 28 suspension lines and 28 gores (panels). A gore is the material between two adjacent suspension lines extending from the upper lateral band to the lower lateral band. The upper and lower lateral bands are made of high strength nylon and sewn into the top portion of the canopy as reinforcement due to the high pressure created in this area of the canopy. Tape and stitching reinforce the lower lateral band.

The suspension lines form the framework of the canopy. Each line starts at one of four connector links attached to the risers and cross-connector straps, travels to the skirt or base of the canopy, channels through the canopy and comes out at the apex (center). From here, it travels back down the opposite side of the canopy to the skirt and opposite connector link. The lines are continuous, without knots or splices, through the canopy. Clove-hitch and half-hitch knots secure the lines to the links and

are further strengthened by about 2 inches of zigzag stitching. Attached to the apex is a pilot chute consisting of a centered coil spring covered by canopy vanes and cones. Pilot chute material is also made of 1.1-ounce, rip-stop nylon. The pilot chute attaches to the apex (vent) lines using a nylon bridle line with a two-inch loop on one end. A seven-inch loop secures the pilot chute to the apex lines at the opposite end. During parachute deployment, the pilot chute traps air and pulls the canopy from the parachute pack.

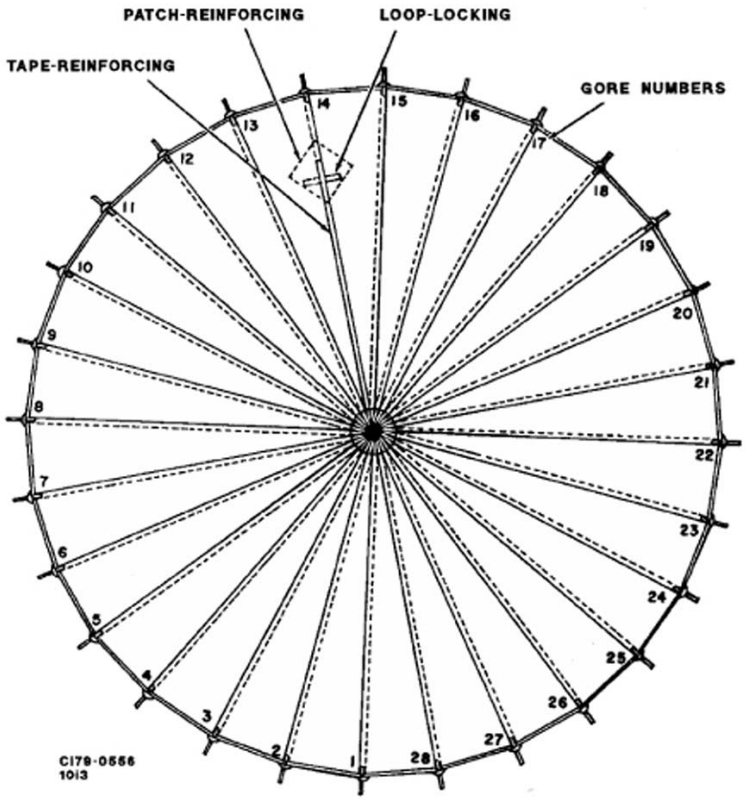

Figure 2–2. C–9 parachute canopy.

Parachute pack

The pack contains the folded canopy, pilot chute, and suspension lines. The pack holds these components in the proper sequence for deployment and protects the canopy during normal flight operations. The pack's interior is free from protrusions, snags and other obstructions that might damage the canopy or interfere with proper operation. The canopy and lines are stowed in an arrangement allowing rapid and complete opening during the first stage of deployment. Attachment of the pack to the harness in the proper position is vital to ensure the pack functions properly. The back style uses a quarter-deployment bag which holds one-fourth of the folded canopy. The suspension lines are stored in channels on the outside of the quarter-deployment bag, and the lower one-quarter of the canopy is stored in the bag. A webbing-locking loop, secured to the bottom of the canopy about 4 inches above the lower lateral band, closes the deployment bag. The quarter-deployment bag reduces malfunctions or damage and provides uniform parachute deployment. The bag keeps the suspension lines and canopy from interfering with each other. It also permits suspension line deployment before releasing the lower one-quarter of the canopy.

Parachute harness

The harness, with its straps and hardware, secures the parachute pack to the wearer's body. Proper harness fitting is an important factor in addition to structural design and canopy release mechanisms.

The harness is constructed of nylon webbing materials that support a person during descent and absorb the opening shock without causing injury. The parachute harness starts as a loop of webbing called the *sling.* Parachute suspension lines attach to both ends of the sling, much like a swing is attached to a tree. To prevent falling out of the sling, there are adjustable leg, back, and chest straps. The United States Air Force (USAF) Class IV harness is discussed in detail in the next lesson of this unit.

Automatic ripcord releases

Ripcord pins secure the parachute pack. Automatic ripcord releases pull the parachute ripcord pins so the parachute deploys from the pack. The releases operate only at preset pressure altitudes and/or after preselected time delays. Automatic ripcord releases are *always* preset for an altitude of approximately 14,000 feet. This is to avoid injury during opening shock which is more likely to occur above 14,000 feet. Ejecting below 14,000 feet activates the timing device immediately because the pressure altitude has been reached. The most common automatic ripcord releases are the Scot Release and FXC Model 11000.

Scot Release

The Scot Release is a cartridge-actuated release. The cartridge pulls the ripcord when it is activated. The release has an aneroid assembly controlling when the parachute ripcord pin is pulled. The aneroid assembly will delay pulling the ripcord and deploying the parachute if the arming cable is pulled above 15,000 feet. The Scot release pulls the ripcord pins as the person falls through a pressure altitude of 14,000 ±1,000 feet. Pulling the arming cable at an altitude of 14,000 ± 1,000 feet causes the firing mechanism to actuate. Once pulled, it allows the parachute to deploy. Pulling the arming cable at any altitude below 13,000 feet causes the release to fire and after the specified time delay, pulls the ripcord pin.

FXC Model 11000

This automatic opening device has a time-delay actuator. The actuator consists of an arming cable, arming cable housing, power cable, power cable housing, barometric aneroid mechanism and time-delay cartridge. It is a mechanically initiated, cartridge-activated, pyrotechnic device. It uses expanding gases produced by the fired cartridges to drive a piston that, in turn, pulls a cable attached to the parachute ripcord. This time-delayed actuator is used on the back style parachute assemblies. The 11000 deploys the parachute at a preset altitude of 14,000 feet, ± 500 feet.

Additional items

Additional items included in parachute assemblies are the Air Force Pamphlet (AFP) 64–15 *Survival and Emergency Uses of the Parachute* and the SRU-16/P *Minimum Survival Kit*. A copy of AFP 64–15 is a mandatory item in each personnel parachute. This pamphlet contains basic information for aircrew members should they find themselves in a survival situation. The pamphlet provides information and illustrations on the parachute, self aid, signal devices, personal protection, equipment and water and food procurement. Many aircrew members have attributed their survival to this manual.

The SRU–16/P Minimum Survival Kit is a major command (MAJCOM) option. The items in this kit may vary depending on the year it was manufactured. The kit is contained in a special retainer pocket inside the parachute pack and installed by a parachute rigger during repacking. In addition to an instruction sheet, the following items are standard in this kit:

10 matches	3 fire starters	2 striker strips	1 pocket knife
3 fish hooks	2 needles	1 compass	1 water bag

607. Class IV parachute harness, torso harness, and release devices

A properly fitted harness links the aircrew member to the parachute assembly and is essential to a safe exit and landing. As an aerospace physiology (AP) technician you need to know how the parachute harness operates as part of the overall emergency egress system in the aircraft. If assigned to High Altitude Reconnaissance Mission Support (HARMS) support at the Physiological Support Squadron (PSPTS), at Beale AFB, you will be involved with a variety of duties associated with the integration of the pilot into the U–2 aircraft and parachute/survival kit upload/download into and out of the aircraft. Other aerospace physiology (AP) technicians may teach the parachute familiarization training and can benefit from learning how a harness secures the parachute assembly to the body of the aircrew member.

Class IV parachute harness

In addition to parachute design and canopy releases, knowing about parachute harnesses and how to fit them is another important aspect we must consider. The back-style parachute uses the Class IV harness which consists of a lightweight, flexible, nylon-webbing framework mounted on a nylon vest with a sectional main sling (fig. 2–3). Parachute suspension lines attach to both ends of the risers using the links. This harness permanently attaches to the pack of back-style parachutes. Each harness is pre-fitted and adjusted to the wearer.

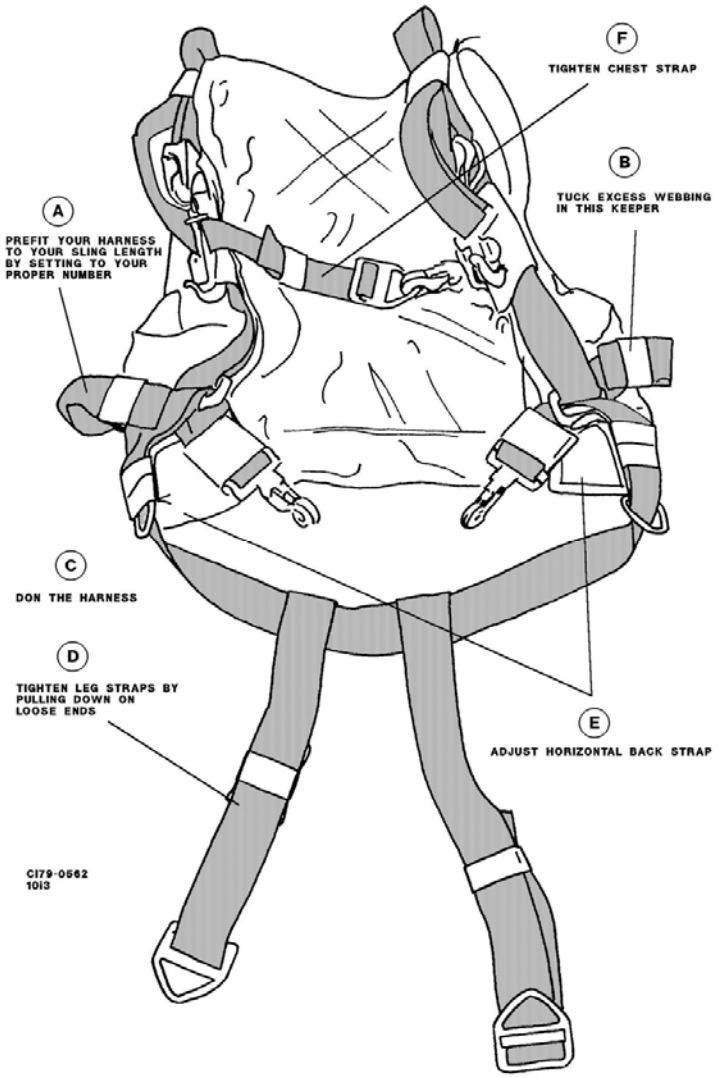

Figure 2–3. Class IV parachute harness.

There are three quick adjustment points (one for each leg and one for the chest). Two additional adjustments (secondary adjusters) are next to the hip links. The main sling webbing, passing through the secondary adjusters, is numbered from 1 through 5. A setting of 1 is the largest main sling adjustment and a setting of 5 is the smallest main sling adjustment. The number setting should be the same on both secondary adjusters. At this point the harness is now ready to be fitted. To better explain how to fit a harness, we will cover how to fit the back-style harness. To fit this type harness, follow these instructions:

1. Have the crewmember slip the harness over the shoulders and assume a forward leaning stance.
2. Adjust the sling adjustment webbing evenly on each side until the seat sling is snug against the buttocks.
3. Attach and tighten the leg straps.
4. Attach and tighten the chest strap.

Note: Be sure to stow all excess webbing ends into the elastic keepers.

Torso harness

The torso harness is a variation of the Class IV harness and is not permanently attached to the parachute pack. It is a single-unit assembly designed for wear by aircrew members outside the various aircraft in which the parachutes are installed or otherwise attached to the ejection seat. Aircrew members wearing the harness attach the parachute by mating the canopy release body assemblies to the parachute adapter assemblies. The parachute adapter assemblies are located on the parachute risers within the aircraft. The releases allow ease of parachute canopy jettisoning for landings in high winds or water.

The PCU–15/P and PCU–16/P torso harnesses are used in the F–15, and F–16 series aircrafts. They have two Koch canopy release body assemblies. The PCU–15 A/P has two Frost canopy release assemblies and is used in the T–6A series aircraft. The operation of the different canopy releases is discussed next.

Canopy releases

Parachute harnesses have two canopy releases. The purpose of the canopy release is to allow the users to jettison the parachute canopy once they have reached the ground or landed over water. It is important that users know how to operate the parachute canopy releases in order to avoid being dragged over the land or water after landing. The parachute is designed to get you to the ground, after that it can become your enemy if high winds are present. In the following subparagraphs you will learn about three types of manual releases and one type of automatic release.

PCU–4/P canopy release

These are two-motion releases that use a pop-out cable loop actuated latch arm (fig. 2–4). The safety cover unsnaps by pulling out and down. This action frees the cable loop stowed under the cover and acts as its own spring. The spring action of the cable loop allows it to pop into a prominent position for the next release motion. A sharp tug or jerk (not a steady pull) on the cable loop with your thumb causes the latch arm to swing out and down, releasing the parachute risers. The canopy release is in the closed position when the harness is retrieved for use.

The canopy will not accidentally release from the harness during a jump. The release is very strong and will withstand a 10,000 pound tension load before breaking and will withstand a 5,000 pound load without the slightest damage.

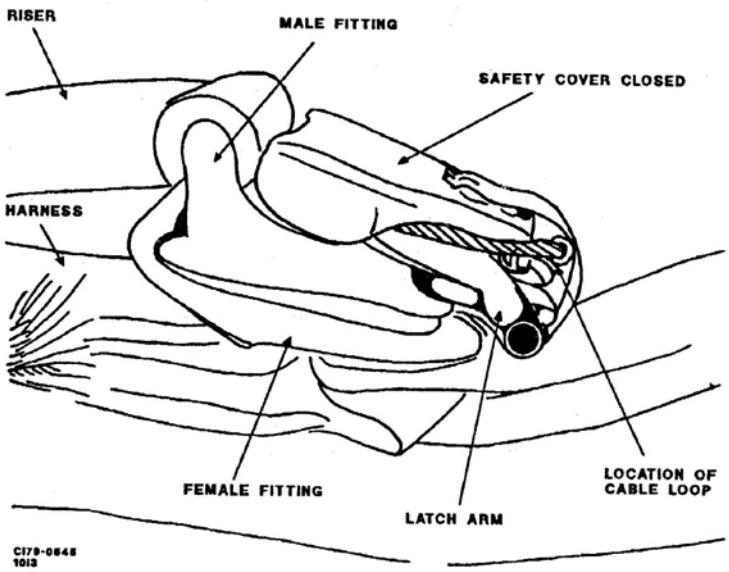

Figure 2–4. PCU–4/P canopy release.

Operating the canopy release is easier to do with your bare hands but it can be accomplished while wearing gloves also. The best method is to operate the right release with your right hand and the left release with your left hand. Because of the sharp, straight-out jerk required on the cable actuator it is harder to do when the arms are crossed over the chest.

Koch canopy release

The Koch canopy release is used on the PCU–15/P and PCU–16/P torso harnesses mentioned earlier. The release is operated by first inserting a finger under the locking lever of the release body assembly and raising the lever with an upward motion. Grasp the actuating lever with the finger tip and pull downward. This releases canopy from the harness (fig. 2–5). To attach the risers to the harness, reverse the above procedures.

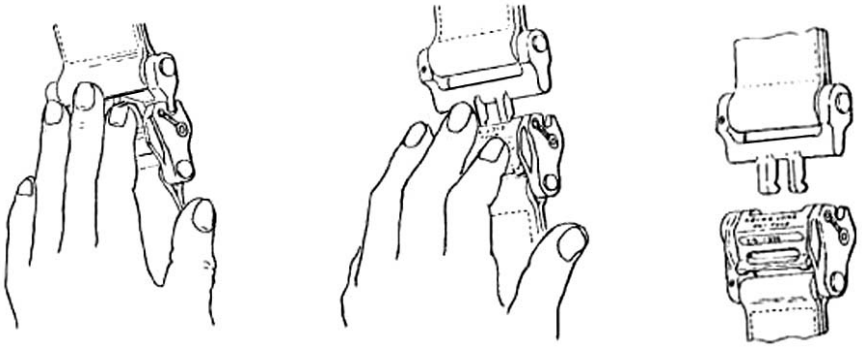

Figure 2–5. Koch canopy releases.

The *2nd generation* Koch release is designed to release the canopy under high drag forces. The simplified one hand cam-operating feature increases the aircrew member's chances of survival. A low opening force of less than 15 pounds enables downed aircrews to separate themselves from their parachute canopy under the most severe land and water drag conditions, protecting them from lethal injuries. The *2nd generation* Koch release is the same as the original, except the locking lever is larger and it makes it easier to access with the fingers.

Frost canopy release

The frost canopy releases are used exclusively on the PCU–15 A/P torso harness. This release mechanism is unlocked by rotating the release's safety latch handle approximately 45° from its normal position. Then move the slide toward the latch while applying enough force to separate the link and release assemblies. This operation can be carried out using either hand, with or without gloves.

The motion required to release the canopy can be applied by pinching the latch and slide between the thumb and doubled forefinger, or between the fingertips and the palm of the hand (fig. 2–6). To attach the risers to the harness rotate the safety latch 45°, and move the slide fully toward it. Push the link all the way into the slot in the release body. Release the slide and latch. They should return to their normal closed position.

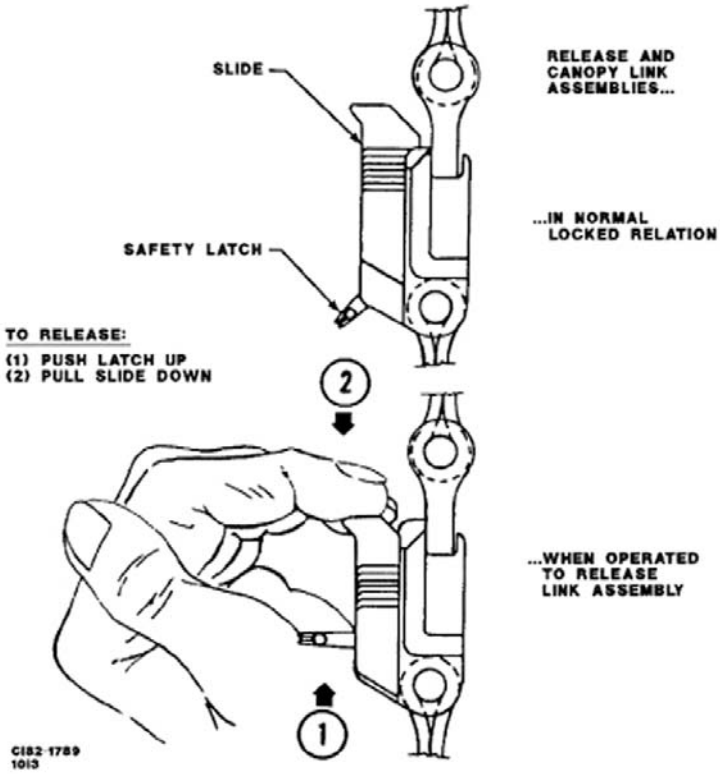

Figure 2–6. Frost canopy releases.

Manual operation of the canopy release devices is the primary mode of separating the harness from the risers. The following is an automatic release intended for use in conditions where aircrew land in seawater and are disabled or have insufficient time to manually activate the release.

Universal Water Activated Release System (UWARS)

The UWARS is designed to allow for the automatic release of the parachute canopy should the pilot become incapacitated during an ejection over water. Each parachute riser contains an UWARS unit with two sensing contacts (fig. 2–7). Upon immersion into seawater, the two sensing contacts, located on either side of the UWARS body, are connected through the conductivity of the seawater to complete the circuit. When the circuit is closed, the batteries charge the firing capacitor. Once the capacitor is fully charged, a rectifier switch is triggered and the output of the capacitor is released into the initiator. The initiator ballistic output is directed through the internal ports of the UWARS body toward the spring-loaded retractable pins connected to the male fitting. The pins are then retracted into the UWARS body, allowing the male release fitting to separate from the UWARS unit. This

entire sequence happens in 2.5 seconds after seawater submersion. The parachute risers and UWARS detach from the canopy release fitting, freeing the crew member from the parachute.

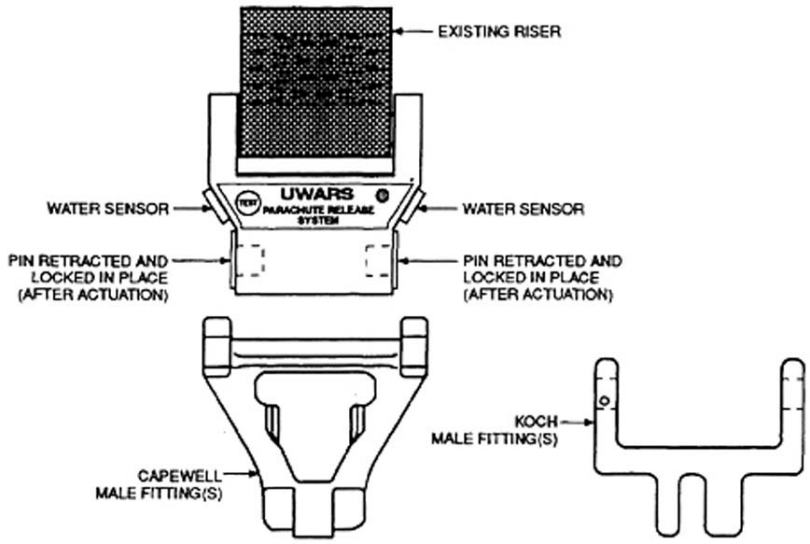

Figure 2–7. UWARS automatic canopy release.

The UWARS is intended to be a backup system for the manual release. It is totally independent of the manual release system and it does not affect the operation of the manual release or depend on the manual release for operation. The unit operates only in seawater so it remains inactive when exposed to humidity, rain, or salt spray.

Personnel lowering

Personnel lowering device (PLD) is an integral part of the personnel parachute for an aircrew member who, after bailing out or ejecting, lands in a tall tree or some other high place. This device permits safe lowering to the ground. The device line is 150-feet long tubular nylon with 2,300 pounds breaking strength. It is stowed in folds formed into elastic loops in the back pad of the parachute. The end of the line is folded twice and sewn to prevent disengagement of the device from the line. The final 25 feet of the line are yellow, indicating the individual is approaching the end of the line. On newer models, the line is colored sage-green, with black strips in the last 25 feet.

The device is ready for use when it is hooked to the chest strap V-ring on the parachute harness (fig. 2–8). On the back-style parachutes the free end of the line is routed one time through the parachute risers above the canopy releases on the parachute assembly. (Please note that for chest-style parachutes the free end is not routed through the parachute risers.) The snap hook on the free end is then connected to the O-ring. At this point the canopy can be released, one release at a time. Once this is completed you are suspended by the chest strap.

The aircrew member establishes a controlled rate of descent by continuously putting out an arm’s length of line from the back pad and feeding the line through the device. Do not release the lowering line at any time to avoid an uncontrolled descent which could result in injury. Another reason for maintaining a controlled descent is to prevent the line from overheating or twisting. The recommended descent rate for the PLD is 2 to 3 feet per second (fps), not to exceed 10 fps. To stop the descent put a slight holding pressure on the device.

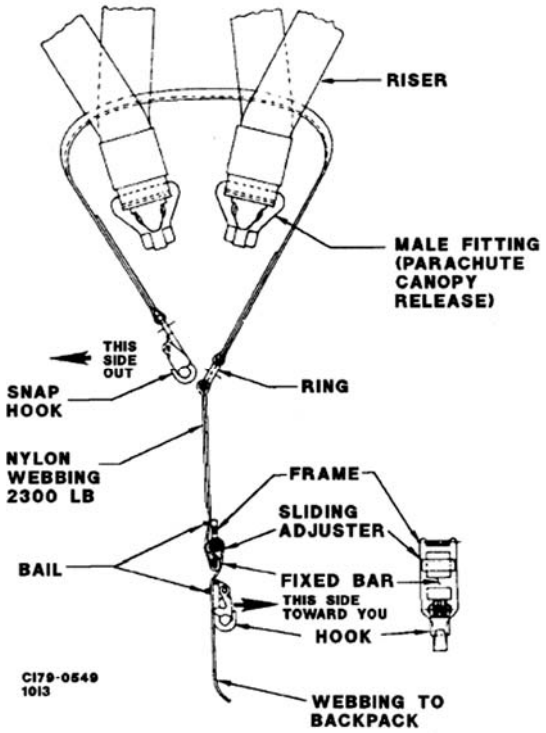

Figure 2–8. Personnel lowering device.

608. Personnel parachute inspections and storage

Unless stationed at Beale AFB and working with the U–2 aircraft, you may not be involved in parachute inspections. However, you need to be familiar with the types of inspections when you work with aircrew life support technicians in support of HARMS. While you may not have direct contact with aircrew member parachutes, you might be assigned to a unit that supports the deployment of parachutists as part of High Altitude Airdrop Mission Support (HAAMS) or has a jump mission. This lesson serves as an overview of when these inspections are conducted and what is inspected. To further your knowledge of this area, refer to TOs 14D3–11–1, *Operation, Inspection, Maintenance, and Packing Instructions for Emergency Personnel Recovery Parachutes* or 14D1–2–1, *Personnel Parachutes*.

Parachute inspections

There are three parachute inspections: (1) preflight, (2) routine and (3) complete. Each has its own specific procedures and justification for when it is accomplished. The importance of making sure a parachute will work when needed cannot be overemphasized.

The parachute assembly must be inspected prior to flight and at 30-day intervals (shorter intervals if necessary). Parachute riggers also perform a complete parachute assembly inspection at initial issue and a complete inspection and repack no less than once each year (one-year repack cycle).

Preflight

A parachute preflight inspection is conducted prior to the flight by the crew member who will use it and/or life support personnel. A similar inspection is conducted upon returning from flight. Some of the items inspected during preflight are: check the pressure of the emergency oxygen, check the snaps on the chest and leg straps, ripcord stowed, etc. It is the aircraft commander’s responsibility to ensure all parachutes on the aircraft, to include prepositioned parachutes, are inspected before flight.

Routine inspection

Life-support technicians accomplish this parachute inspection every 30 days. In addition to all the items inspected during preflight inspection, the technician performs additional checks such as a pull test on the ejector snaps, inspection of canopy releases for cleanliness and proper operation, just to name a few examples.

Complete inspection and repack

A complete inspection is required prior to issue. Each responsible field maintenance activity (parachute shop) unpacks the assembly to prolong parachute life and maintain its reliability. This inspection occurs at 180-day intervals. Necessary repairs are made after a thorough inspection is accomplished in accordance with (IAW) applicable technical order (TO) data. If hard usage or climatic conditions exists, warranting inspections at shorter intervals, the using activity's commander determines the shorter intervals.

Storage procedures

Parachute assemblies are stored in a dry, well-ventilated area. Specially constructed racks and bins protecting them from the sun rays are approved storage areas. Never place undue weight on a pack. While stored, parachutes should be inspected at regular intervals for deterioration or possible fungi or mold growth.

Self-Test Questions

After you complete these questions, you may check your answers at the end of the unit.

606. Personnel parachutes and components

1. Which parachute contours to the body, increasing wearer's comfort?

2. Name the three major components that make up the back-style parachute.

3. How many pounds of direct tension does the C–9 canopy nylon material support?

4. On a C–9 canopy, what is used to secure the pilot chute to the apex lines at the opposite end?

5. What three things does the parachute pack contain?

6. What device reduces malfunctions or damage and provide uniform parachute deployment?

7. What are two most common types of automatic ripcord releases?

8. What automatic ripcord release has an aneroid assembly controlling when the parachute ripcord pin is pulled?

9. At what preset altitude does the FXC Model 11000 deploy the parachute?

10. What additional item is mandatory in each personnel parachute?

11. What eight items are standard in a SRU–16/P Minimum Survival Kit?

607. Class IV parachute harness, torso harness, and release devices

1. What is an important factor in addition to structural design and canopy release mechanisms?

2. List the procedures to fit a back-style parachute.

3. Which torso harness assemblies use the Koch releases?

4. What is the purpose of the canopy release?

5. How much tension should the PCU–4/P release be able to withstand before breaking?

6. What is the best method for operating the PCU–4/P releases?

7. List the procedures for operating the Koch releases.

8. How far do you have to rotate the safety latch to attach the risers to the Frost canopy releases on the harness?

9. What does the UWARS consist of?

10. How long is the personnel lowering device line, what is it made out of and what is the breaking strength?

11. What is the recommended descent rate when using the personnel lowering device and what should it not exceed?

608. Personnel parachute inspections and storage

1. List the three parachute inspections.

2. Who performs the preflight inspection and who is responsible for ensuring it has been done?

3. What is performed to prolong the parachute life and maintain its reliability?

2–2. Ejection Seat Systems and In-flight Egress

A safe escape from a disabled aircraft becomes increasingly difficult as speed and gravitational (G)-forces increase. Seated aircrew members have difficulty escaping from an aircraft at +1.5 G and escape is nearly impossible above +2 to +3 G without ejection devices. In this section we cover different types of ejections seat systems and their characteristics. Then we discuss the factors to consider before an ejection and the basic procedures to follow for a safe ejection.

609. Ejection seat systems

Ejection from an aircraft may be the only alternative in case of an emergency. For the purpose of this lesson, we discuss the two types of ejection systems most commonly used in the USAF: the ballistic and rocket ejection seats.

Ballistic ejection systems

Ballistic ejection systems provide egress from the aircraft by means of propellant charge devices designed to overcome adverse G-force conditions. The rapid G-onset due to the high acceleration rate of ballistic systems requires the propellant charge to be as low as possible in order to prevent the system from exceeding human G-load tolerances.

For example, the B–52 aircraft employs an upward-firing ballistic ejection system for the pilot, co-pilot, and electronic warfare officer. In the event of a low altitude emergency such as a fire during take-off, the minimum ejection altitude for a level flight in these seats is zero based on 90 to 400 knots indicated airspeed (KIAS). The navigator and radar navigator positions are located side by side on the lower part of the aircraft cabin and are equipped with a downward ballistic ejection system because upward ejection is not possible due to the airframe structure. These downward-firing seats require a minimum of 250 feet for level flight based on 120 to 400 KIAS. Since human tolerance of negative G acceleration is lower than the tolerance of positive acceleration the downward ballistic ejection system presents an additional aircrew injury concern. The figures mentioned above are emergency minimums. The recommended ejection altitude for the B–52 is at or above 2,000 feet.

Rocket ejection systems

Most ejection seats are propelled by rocket systems that produce the higher trajectory necessary to clear the aircraft frame during high speed egress as well as during low speed and *zero-zero* (zero airspeed-zero altitude) ejection. Under this category we discuss the Advanced Concept Ejection Seat (ACES II) and the Martin Baker US16LA and US16T ejection seat systems.

Advanced Concept Ejection Seat

The ACES II is an escape system developed for high performance aircraft (fig. 2–9). Its increased execution capability improves aircrew survivability during ejection under adverse conditions throughout the aircraft flight envelope. The A–10, B–1B, B–2, F–15, F–16, F–22, and F–117 have the ACES II system installed; however, the configuration of this system may vary from aircraft to aircraft. For example, the B–1B has a restraint system that retracts crew member's arms and legs so they can safely pass through the overhead hatch opening.

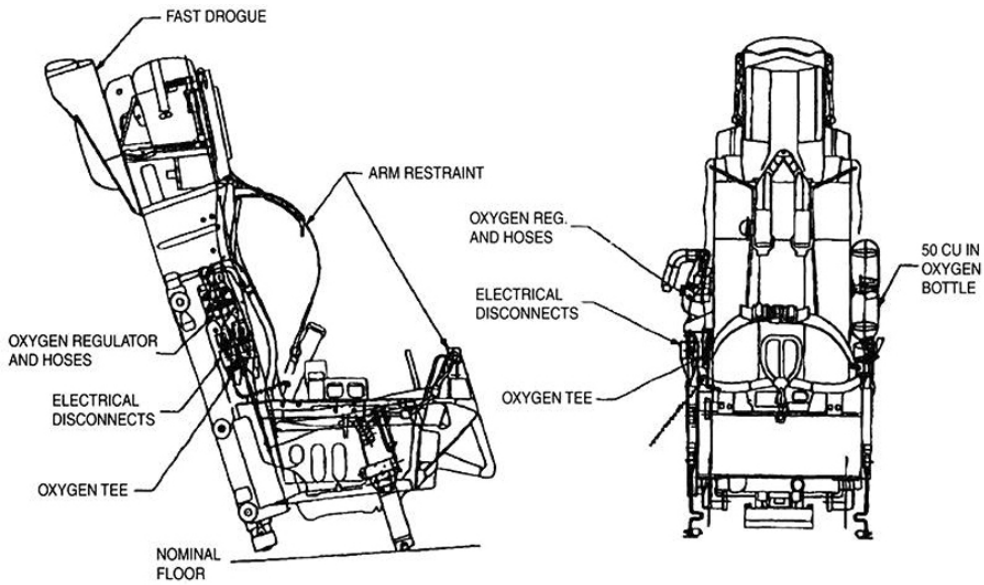

Figure 2–9. ACES II ejection seat system.

Automatic operation

The ACES II is configured for optimum performance for a 0 to 600 Knots Equivalent Air Speed (KEAS). Most models feature dual ejection sequence initiators (handles) located on either side of the seat; some other aircraft have a center-mounted handle located in the front of the seat. Pulling either control fires the dual initiator that activates the aircraft's sequencing system, which causes the shoulder harness to retract and the canopy to jettison. Pressure from the sequencing system ignites the rocket catapult; as this occurs, the catapult pressure starts the recovery sequencer power supply.

As the seat moves up the guide rails, a lanyard connected between the oxygen cylinder and the cockpit activates the emergency Oxygen (O_2) system. As the lower part of the seat approaches the top of the guide rails, a sequence start switch on the seat is turned on. As part of that sequence a gyro rotor and a vernier rocket combine with a pulley system to enable the seat to maintain the correct pitch thus keeping the pilot upright during the ejection; however, this is dependent on the attitude of the aircraft during this process. The thrust of a divergence rocket rolls the seat to impart a horizontal vector in order to avoid collision in multi-place and single-place aircraft.

At the same time, the pitot tubes are exposed to the air stream. These are hollow tubes through which raw air is forced into to measure static pressure. Pitot and static pressure inputs act on speed and altitude transducers to trigger an internal control switch setting. The recovery sequencer oversees the switches and selects the automatic operation mode appropriate for the environment. Once the seat

leaves the aircraft, the rest of the recovery sequence depends on the selection of one of three recovery modes.

The seat recovery sequencer has the option of selecting from three operating modes, shown in this table:

Mode	Sequence	Explanation
1	Low-speed (250 knots or less) Low-altitude (0 to 15,000 feet)	The parachute automatically deploys almost immediately after the seat leaves the aircraft.
2	High-speed (250 knots or more) Low-altitude (0 to 15,000 feet)	A drogue chute deploys first to slow the seat, followed by parachute deployment.
3	High-altitude (Higher than 15,000 feet)	The sequence of events is almost the same as mode 2. The main difference is the delay after drogue chute deployment. This delay lasts until mode 2 altitude and speed conditions are within acceptable limits. The delay between drogue chute deployment and man-seat separation allows the ejection seat to stabilize and decelerate during free fall. Man-seat separation and deployment of the personnel parachute occur after the crew module has stabilized and decelerated, and is within altitude requirements.

Manual operation

An aircrew member can accomplish manual deployment of the personnel parachute and man-seat separation if the recovery sequencer, mode setting, or any other part fails. Pulling the restraint emergency release handle, located on the right side of the seat, allows for manual man-seat separation and parachute deployment.

Martin Baker US16LA and US16T ejection seat systems

The Martin Baker US16LA and US16T are ejection seats that use a twin catapult, rocket-assisted ejection system. Each seat includes the following: seat assembly, seat height actuator, back plate, backrest, dual guide rails, leg restraint lines and garters, powered inertia retraction device (PIRD) straps, lap belts, emergency oxygen bottle, packed parachute (GQ 5000) and harness, back cushion and cover, and a seat survival kit (SSK). The manual ejection handle on the front crossbeam is connected to a dual initiator assembly under the front of the seat. The survival kit incorporates a ground-selectable automatic deployment device that allows the aircrew to deploy the pack onto a lowering line automatically or manually during parachute descent. The survival kit contains a compass, signal smoke, mirror, distress signal kit, first aid kit, radio, and radio beacon. Each seat is equipped with emergency oxygen that is operated manually by aircrew activation or automatically during ejection and prior to seat-pilot separation. This system provides a continuous flow of oxygen for 10 minutes. Pulling the back pad of the seat harness forward allows viewing the oxygen pressure.

Martin Baker US16LA ejection seat

The Martin Baker US16LA is the ejection seat used on the T–6A aircraft (fig. 2–10). The seat is capable of providing a safe escape from zero altitude and zero speed to up to 35,000 feet at air speed up to 370 KEAS. This lightweight, low speed ejection seat provides escape from zero altitude at zero airspeed in a near level attitude through the T–6A speed limit of 316 KIAS. The US16LA ejection seat is designed to improve pilot field of view with improved comfort and pilot efficiency. It provides integration with on-board oxygen generating systems (OBOGS), chemical defense and helmet mounted systems. The controller drogue deploys the stabilizing drogue that decelerates and stabilizes the ejection seat during the initial phase of the ejection sequence. The parachute container provides support for the pilot’s head during forward acceleration or wind blast; thus minimizing injury. This ejection seat uses a Frost release, also referred to as *quick release*.

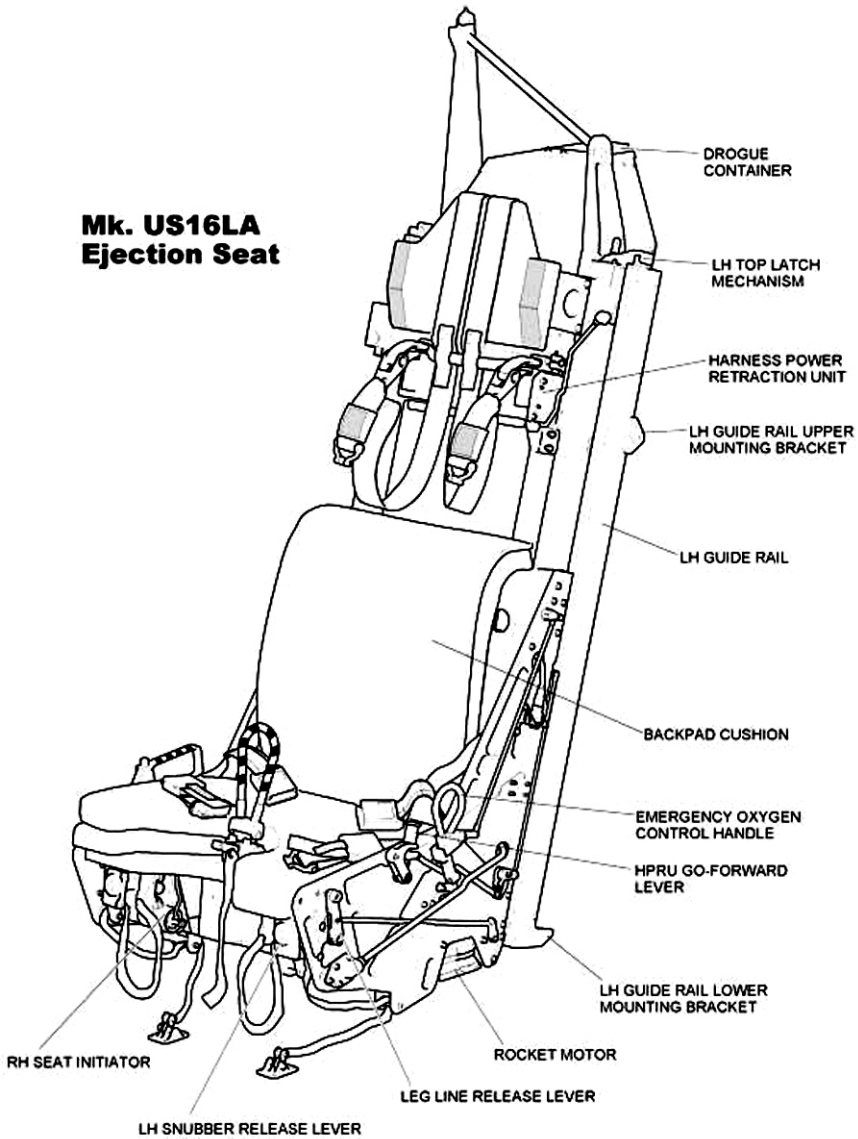

Figure 2–10. US16LA ejection seat system.

Martin Baker US16T ejection seat

The US16T–1 (front seat) and US16T–2 (back seat) ejections seat systems are scheduled to replace the Northrop F–5/T–38 ejection seat in the T–38C starting in FY09. The seat is capable of providing a safe escape from zero altitude and zero speed up to 50,000 feet at air speed up to 600 KEAS. These seats feature a lightweight catapult design and operate by cartridges with the aid of a rocket motor. The ejection seat gives safe escape for most values of the aircraft's height, velocity, attitude, and flight path within the envelope from zero height at zero velocity in a near level attitude and the limits of the aircraft's maximum speed and ceiling. This seat uses a 2nd generation Koch releases and has upper as well as lower leg garters. In contrast to the Northrop F–5/T–38 which uses a C–9 parachute canopy, this system also uses the GQ–5000 type parachute. The US16T–1 and –2 also incorporate a Safe/Armed lever that allows the aircrew member to exercise added positive control over the firing of the seat.

GQ–5000 parachute

The GQ–5000 parachute is used in the T–6A ejection system and will be in the T–38C's ejection system once upgraded with the US16T model ejection seat (fig. 2–11). The parachute assembly is comprised of the GQ–5000 aeroconical canopy, withdrawal line, suspension line stowage tray and forward and aft risers. These items are packed into a rigid metal container, the parachute head box, closed by a lid assembly and mounted to the top of the ejection seat.

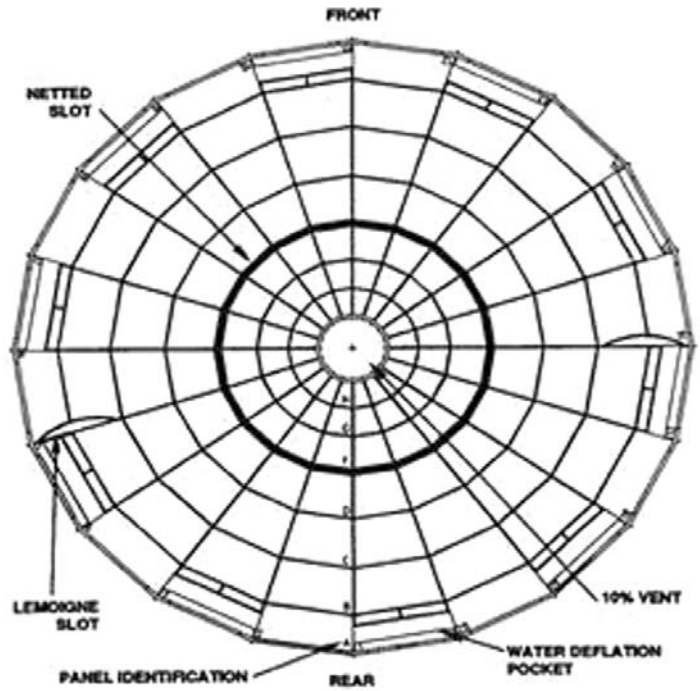

Figure 2–11. GQ-5000 parachute canopy.

The nylon aeroconical canopy is 21 feet in diameter when inflated. It is multi-colored (white, international orange, olive green and sand shade) nylon, and constructed of 20 gores (panels). It has been tested up to 29 G_z and supports up to 290 pounds (lbs). The gores terminate at the base of the canopy. Suspension lines are attached to the base of the canopy and descend to the risers. Each parachute riser terminates at one end in a detachable connector link that is attached to the aircrew restraint harness. This connector link is a quick release mechanism that enables canopy jettison.

The canopy is modified with water deflation pockets on alternate gores and suspension lines. It is also equipped with control toggles that open and close two 53-inch *Le-Moigne* slots to provide directional control. The *Le-Moigne* slots are located 162 degrees apart in gores 6 and 16 and are locked in the closed position. This ensures the parachute descends vertically on initial opening.

610. In-flight egress procedures

So far you have learned about some types of egress systems used in USAF aircraft. It is important to emphasize, however, that regardless of the type system, the aircrew must use it within its safe operating limits. In addition, the aircrew member must be ready to make the decision to eject before they board the aircraft. During the emergency is the wrong time and place to consider alternatives. Engine fires, battle damage, or some other critical situation can cause aircraft ejections.

Ejection considerations

When the aircrew member determines that a successful emergency crash landing or ditching is too dangerous, he or she must make the decision to eject. There are three factors that affect the success or

failure of an ejection: aircraft altitude, aircraft attitude, and air speed. The importance of these three to a successful ejection cannot be emphasized enough.

Altitude

The pilot's decision to eject comes all too often after the aircraft is below its optimum altitude. This alone is the major contributing factor in most unsuccessful ejections. To clarify, an unsuccessful ejection is one where any crew member sustains a fatal or incapacitating injury. A partially successful ejection is one where a crew member sustains minor or non-disabling injuries.

An aircrew can experience a lack of O_2, extreme cold temperatures, and critically high opening shock during an ejection at high altitude. Supplemental oxygen stored in the high-pressure emergency O_2 cylinder provides protection from the effects of a low pressure environment (high altitude). Adequate clothing combats the extreme cold to a certain degree. Free falling to a lower altitude reduces the effects of extreme cold temperatures and reduces parachute-opening shock to a lower G force. However, other problems may occur if the ejection occurs at too low an altitude. These problems include failure of proper man-seat separation, failure or partial deployment of the parachute, and similar failure or partial failure of other survival equipment.

As good as ejection seats and systems are, they have performance limitations. It is important for aircrew to know the safest altitude to eject according to their specific aircraft ejection system in order to have the highest possibility of a successful ejection.

Attitude

The second factor affecting the outcome of an ejection is aircraft attitude. The attitude of an aircraft during an ejection involves three factors: straight and level conditions, up or down vectors, and aircraft bank angle.

Straight and level flight, along with the time needed to deploy the parachute, represents the minimum for surviving a low-altitude ejection. Most systems provide enough upward momentum for the parachute to be opened above the altitude where the ejection took place.

Up or down vectors are critical in determining the success of an ejection. A climbing aircraft provides the optimum situation for an ejection. A diving aircraft presents the worse situation for ejecting at low altitudes. The best ejection system cannot overcome the downward vector if minimal ground clearance exists.

The aircraft's bank angle can drastically affect the altitude the ejection seat reaches. If the aircraft is in a bank of 90°, the effectiveness of the seat may be reduced by 100 percent and result in aircrew being fatally injured during ejection.

Most of the ejection seat systems we described earlier in the lesson have a *zero-zero* capability; zero airspeed and zero altitude. However, you need to understand their limitations. For example, is there a boarding weight limitation? The *Dash One* (–1) TO checklist lists the limitations for particular ejection seat systems. Consult these references and be familiar with various system limitations.

Airspeed

Aircraft speed is the third critical factor an aircrew must consider. Excessive aircraft speed can prevent or disrupt ejection seat separation from the aircraft. Excessive speed can also subject an aircrew to wind blast of such velocity that it causes broken and dislocated limbs.

If an aircrew member is faced with an ejection and excessive speed, he or she may improve the situation by performing what is known as the *zoom maneuver*. The zoom maneuver is designed to trade airspeed for altitude. A pilot can do this by raising the nose of the aircraft and putting it in a climb. This eventually reduces the airspeed and gives the pilot more altitude. This is very effective during critical phases of flight such as takeoff, landing, and low-altitude operations.

Ejection procedures

An aircrew must perform and complete a series or sequence of events before ejecting from a disabled aircraft. Procedures before ejection, body positioning for the ejection, procedures during and after an ejection, are explained next.

Procedures before ejection

These general procedures normally apply to ejection from most aircraft. Carry out the procedures in the following sequence (time and conditions permitting):

1. Transmit aircraft location and intent to eject (Mayday). Set beacon/transponder for continuous operation.
2. Check to ensure the lap belt, shoulder harness, and survival kit straps are drawn up tight. Users of the ACES II should only draw up the survival kit straps until they are snug.
3. Stow all loose equipment.
4. Tighten the helmet chin strap and O_2 mask.
5. Pull down and lock the visor assembly.
6. Activate emergency O_2 (if at high altitude and not done automatically).
7. Jettison the canopy and arm the seat.
8. Fire the seat.

Body position for the ejection

Correct body positioning during an ejection sequence helps reduce the chance of injury. Assuming a correct body position before an ejection is critical to reduce the chance of spinal, neck, and other injuries. The body position can be applied to several ejection seat types:

1. Sit erect and well back in the seat.
2. Ensure your arms are well back and inside the armrests.
3. Keep your head hard against the headrest.
4. Put your chin on your chest.
5. Place your knees together (for side-pull ejection seat style).
6. Position your feet according to aircraft's *Dash One*.

Some aircraft may employ the positive-locking spurs method of leg restraint. These exceptions emphasize the need to check the *Dash One* of the particular aircraft-type ejection system being taught.

Procedures during and after ejection

After the ejection has occurred, the priority is to get out of the seat and ensure the parachute's automatic opening device has been activated. Depending on the type of seat involved, training may require the aircrew to try to "beat" the automatic opening of the lap belt. The lap belt usually opens in the time it takes an aircrew member to think of doing so. This action however gets the aircrew into the habit of checking to make sure their lap belts have opened.

The possibility of man-and-seat or parachute-and-seat entanglement can be a problem. Man-seat separation begins soon after the lap belt opens in most seats. In some cases, parachute deployment extracts the aircrew from the seat. In other seats, a man-seat separator pushes the pilot from the seat. Still in others, or during a seat malfunction, their arms and legs must be used to vigorously force themselves out of their seat. In any event, man-seat separation must occur to assure proper parachute operation.

Self-Test Questions

After you complete these questions, you may check your answers at the end of the unit.

609. Ejection seat systems

1. What requires the propellant charge used on a ballistic system to be as low as possible?

2. Why does the navigator and radar navigator on a B–52 have a downward ejection seat?

3. Describe Mode 2 of the ACES II?

4. What device on the ACES II when pulled allows for manual man-seat separation and parachute deployment?

5. The US16LA provides safe ejection at zero altitude-zero airspeed up to how many feet and how many KEAS?

6. What action occurs when the controller drogue is deployed?

7. What is the GQ–5000 parachute assembly comprised of?

8. How is the GQ–5000 canopy modified?

610. In-flight egress procedures

1. What is the major contributing factor in most unsuccessful ejections?

2. What constitutes an unsuccessful ejection?

3. What constitutes a partially successful ejection?

4. In regards to up and down vectors, what provides the optimum situation for ejection?

5. How can aircrews reduce their chance of injury when faced with a high-speed ejection?

6. List the procedures that should be accomplished prior to ejecting if time and conditions permit.

7. List the procedures to get in the correct body position for ejecting.

8. What is the priority after ejecting?

2–3. Parachuting Fundamentals

Parachuting-related injuries and fatalities can result without proper training or knowledge. This section teaches you what aircrew members should do during an ejection or bailout to prevent an injury or a fatality. It also explains what to do if a parachute malfunctions so they can land safely. Since aircrews may not always have a choice in which type of terrain to land, procedures for landing in all types of terrain are also discussed.

611. Principles of parachuting

Each aircrew member is inherently responsible for his or her actions during an ejection or bailout. Some of the principles and procedures used in parachuting are discussed in this lesson. This guidance helps aircrews to prevent injuries and fatalities should they bail out from the aircraft.

Bailout procedures

When an aircrew member cannot ditch or crash-land the aircraft, his or her only recourse is to bail out. Remember that the final decision to bail out belongs to the aircraft commander. Each aircraft's *Dash One* –1) TO lists the emergency escape procedures. Consult the appropriate TOs for the applicable aircraft.

Escape from an aircraft

If escaping through a hatch in a cargo-type aircraft, it is best to exit head first. If possible, roll out (do not dive) from the rear edge or bottom of the hatch, facing forward. Bring your knees to your chest and wrap your arms around your knees in a cannonball position. This position presents the smallest possible drag area of your body and reduces the chances of you coming in contact with the aircraft fuselage.

When using the side doors to escape, exit from the rear edge of the door. If exiting from a personnel exit from the front edge, the airstream could slam you into the rear edge before you clear the airframe. Use your arms to push away from the fuselage and jump as far out as you can.

Actions after clearing the aircraft

Do not be in a hurry to pull the ripcord. You need time to clear the aircraft, regardless of how low the aircraft is. Of course, the time to clear the aircraft should be enough so the ripcord is not pulled within the aircraft at extremely low altitudes (2,000 feet or less). Time is not as critical at higher altitudes above 14,000 feet; the primary aircrew concern is concentrating on actuating the automatic release arming knob if the parachute is automatic.

It is vital that the jumper establishes a stable body position for when the parachute is deployed. If the body is spinning or flipping when the parachute is deployed, the chance of becoming entangled with the canopy or suspension lines increases. To avoid this he or she must adopt a *free fall* body position; which may vary depending on the situation. The next few subparagraphs explain the military free fall body position and spread eagle.

Military free fall

This body position is the most preferred because it is relatively simple and requires little or no practice for it to be effective. You will learn the procedures for an escape above and below 14,000 feet. All of these procedures are for use with the back-style parachute, unless otherwise noted. Follow these procedures for above 14,000 feet (fig. 2–12):

1. Tuck your chin on your chest. This will allow you to see the D-ring in case the parachute needs to be manually deployed. (Note: For the chest-style parachute, turn your head to the left or the right).
2. Place your legs together and slightly bend at the waist and knees. Keeping the legs together reduces the chance of having the parachute deploying between your legs.
3. Place your arms across your chest. Do not hold the ripcord in your hand. (Note: For the chest parachute, place your hands under the parachute pack.)

Figure 2–12. Military free-fall body position.

When jumping from below 14,000 feet, the only procedure that changes is where you place your hands. If using a back-style parachute, place your hands on the ripcord. If using a chest-style parachute, place your left forearm and hand under the pack with the left hand grasping the lower right corner. Place your right hand on the ripcord.

The military free-fall body position, while stable and relatively easy to accomplish, can result in body spinning. This free-fall phenomenon normally starts after the body reaches terminal velocity and/or when the body has assumed a back-down, head-low attitude in relation to the ground. The spin may be in a clockwise or counterclockwise direction and the onset could be either gradual or rapid.

A flat body spin can be dangerous and result in loss of consciousness and even serious injury. However, flight accident records rarely include reports of serious injury as a direct result of the spin. Therefore, the best policy is to respect the spin without panic. Fear could lead to the mistake of

pulling the ripcord at high altitudes. This mistake can subject a person to three hazards: hypoxia, cold temperatures, and/or excessive parachute opening forces. It is important to know a spin can occur and what corrective actions to take. That brings us to the second body position for free fall, the spread eagle.

The spread eagle

This position is commonly used by experienced free fall parachutists (fig. 2–13). This position can be used to break or slow down a spin; however, it is very difficult and would require practice and experience. Here is how to perform a spread eagle body position:

1. Arch your back and throw your head back.
2. Extend your arms horizontally, keeping elbows slightly bent, turn your palms down, spread your fingers, and cup your hands slightly.
3. Spread your legs about 45°, and bend your knees in a relaxed position.

Figure 2–13. Spread-eagle body position.

Parachute deployment

It is essential for an aircrew member to know how to operate the aircraft systems he or she is responsible for and how to operate his or her parachute. When an emergency requires the aircrew member to eject or bailout, the parachute becomes the aircrew member's primary means to get back to the ground safely. It is vital that you, as well as the aircrew members you instruct, know how to use it. The following subparagraphs will give you the information needed to ensure the parachute is ready to be used.

If there is not an automatic device, the best rule to follow is to pull the ripcord *below* 14,000 feet. If the parachute has an automatic device, pull it just prior to leaving the aircraft (non-ejection seat aircraft only). If in the military free-fall body position, pull the ripcord with both hands if it is a back parachute. Guide or help your right hand with your left hand to pull the handle. Keep your hands close to your body. Therefore, when pulling the ripcord, it is best to pull towards your legs and not off to the side of your body.

If in the spread-eagle body position, pull the ripcord with your right hand and bring your left hand up around your head. This will reduce the chances of becoming unstable when your right hand is brought in.

As you may remember the parachute has a pilot chute attached to the apex of the canopy by a bridle line. When the ripcord is pulled or the automatic release device pulls the pins holding the pack closed, a spring in the pilot chute forces it out of the pack. It opens, acting as an anchor. As the person falls away from it, the pilot chute draws the canopy and suspension lines from the pack. When this action is completed, the canopy begins to inflate.

The deployment and opening forces are felt one to two seconds after the ripcord is pulled. There are two forces involved in canopy deployment and opening. One is called *snatch force*, the other *opening shock*. Both forces occur so close together they are thought to be one.

The snatch force is less severe than opening shock but is usually the one most remembered by the user. The force is produced at the instant the suspension lines are fully extended. At this point, the pilot chute has completed its job of assisting the withdrawal of the canopy and lines from the pack. While the jumper continues to fall, the canopy has decelerated and is traveling much more slowly than the jumper. At this time there is no slack and the falling body must accelerate the canopy back to the body's speed. This requires force that is transmitted from your body, through the harness, to the canopy.

Opening shock is the force produced by the aerodynamic inflation of the canopy as it reduces your speed to a slow descent. The force varies with the person's weight, altitude, and speed.

612. Parachute malfunctions and handling procedures

Once the crew member has made it successfully out of the aircraft and the parachute has opened, does not mean that they are completely safe. There is always the possibility of something going wrong, like for example, a malfunction of the canopy.

Checking the canopy

The first thing that needs to be done is to check the condition of the canopy. Look up and check the canopy as soon as the parachute opens by placing your hands on the rear risers and pushing forward. As the body rotates back, it gives you a good look at the canopy. A normal canopy should be without tears or holes. You should also have two sets of risers: two front risers (left and right) and two rear risers (left and right). The risers should be separated and not tacked together. If they are tacked together, slide your hands forcefully between the risers to break the tacking. It is possible for the canopy to open and not be in its intended shape. There are several kinds of malfunctions. The procedures below explain what to do for each one of them.

Partial inversion

A partial inversion occurs when one part of the canopy gets crossed over the rest of the canopy. It makes the skirt of the parachute form a figure eight when viewed from below. At the crossover point of the figure eight, one skirt band is underneath. To correct this partial inversion, pull down on the suspension lines on the lower skirt band so the inversion slips out. If you cannot tell which part of the skirt is lower, pull on the suspension lines attached to the smaller lobe of the figure eight. To avoid being entangled with the lines, be careful not to pull down below your legs. After pulling the lines down, release them sharply. This may be done several times. You should pay close attention to the canopy because it can produce friction damage to the canopy (fig. 2–14). If the above technique does not correct the problem, use your hook-blade knife (on the right front riser) to cut the lines causing the malfunction. Be careful not to cut the riser webbing and ***never*** cut more than four suspension lines.

Figure 2–14. Partial inversion.

Full inversion

In this situation the entire canopy has turned inside out. This is easily noticed because the pilot chute will be visible inside the center of the canopy. This can be a front-to-rear inversion (the red loops for the four-line jettison will be on the set of front risers) or a side-to-side (risers crossed over the head). With either one, the canopy will still function normally. The four-line jettison (explained later in this lesson) should still be activated.

Line(s) over

This occurs when one or more suspension lines are looped over the canopy. It looks similar to a partial inversion but the figure eight is not closed up. The danger with this malfunction is that the friction created by the nylon line rubbing the nylon canopy may produce heat and literally burn holes in the canopy. The rate of descent and oscillation will both increase. To correct this problem, find the line(s) and try to slip them over to the side of the canopy. If this is not possible, you may have to cut the line(s). As we mentioned before, do not cut more than four lines; if other lines are already broken, make sure you do not exceed four lines cut (fig. 2–15).

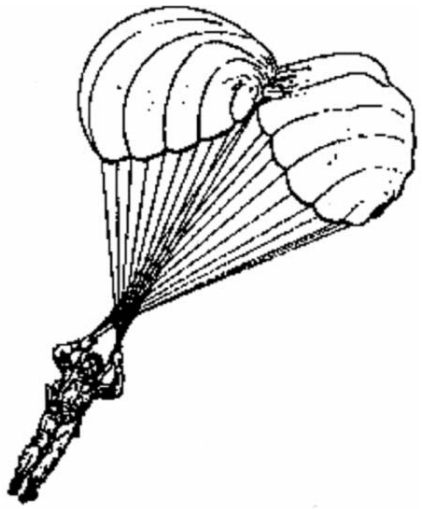

Figure 2–15. Line over.

Blown panel, tears, and broken suspension lines

Usually these conditions are caused by excessive opening forces; also, friction during the deployment sequence can cause this malfunction. There are no specific corrective procedures for these conditions. If any of the parachute lines have been damaged or broken, do not perform the four-line jettison.

Twisted risers

The parachute suspension lines often twist during opening. Rotation of the body or the canopy during deployment causes the twist, but it is not a cause for concern. Normally, the twists will correct themselves. Reach up and spread the risers apart to start spinning out of the twists (fig. 2–16). To speed up the spin, kick your legs, like pedaling a bicycle, in the direction of the spin.

Figure 2–16. Twisted risers.

Streamer

This is the most serious parachute malfunction. For some reason the parachute canopy does not inflate. The crewmember can try pulling the canopy down and releasing it back into the air stream or vigorously working the risers apart in an attempt to get some air under the canopy skirt. At this point all other bailout procedures obviously take the back seat in order to correct a streamer. A partially inflated canopy however, may be survivable.

Oscillation

This is not a canopy malfunction, but rather a pendulum-like swing caused primarily by the uneven spilling of air from under the canopy. Sometimes oscillation occurs when there is a difference in wind direction and velocity at various altitudes. Pull down on the two risers toward the rising half of a swing near the top of the swing, relaxing the tension. Pull near the bottom center of the swing until the swinging slows down after relaxing the tension. Taking up a slip (described under *turning and steering* below) temporarily dampens an oscillation. Do not be alarmed if the canopy flutters during severe oscillation. Oscillation is generally not a problem at altitude. The primary danger of oscillation is the increased speed at which it may cause you to hit the ground.

Turning and steering

Visually locate the jettisoning (releasing) lanyards installed on each rear riser strap. The lanyards are about arm's length up the risers and are identified by a red loop on the inside surface of each rear riser. In an ACES II ejection seat they will be just above eye level. Locate the red loop after the parachute opens and stabilizes. Pull both lanyards down toward your feet in order to activate the suspension line release. It may be necessary to give a second sharp tug (both sides) to unlock the four suspension lines. Releasing these four lines will cause a large lobe or scallop to form in the rear-center position of the canopy skirt (fig. 2–17). The releasing of the four lines is what is called a *four-line jettison modification*. The lobe formed in the canopy provides a means to maneuver the canopy and significantly reduces oscillations.

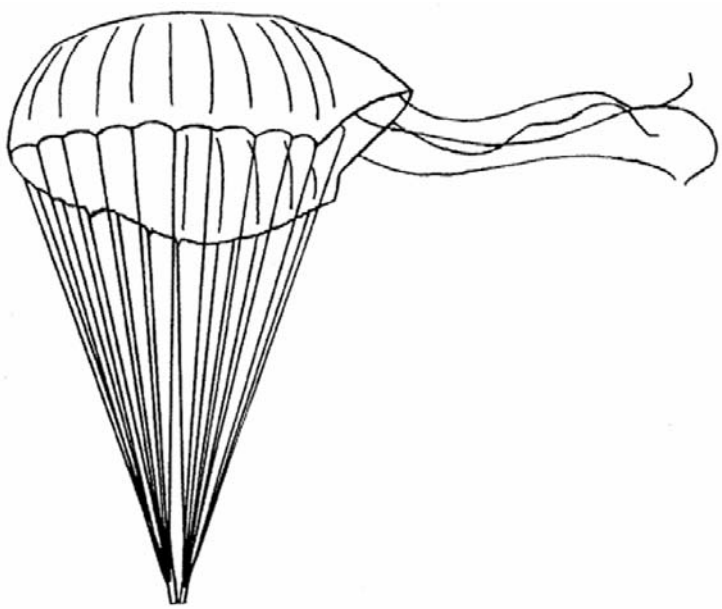

Figure 2–17. Canopy after four-line jettison.

The *four-line jettisoning system* can be used at any altitude. The device reduces oscillations and provides turning and steering capability at approximately 30° per second for the parachute canopy. However, ***never*** attempt these procedures when:

- There is a malfunction such as a broken suspension line, or a line or suspension line over the canopy. Do not modify the parachute if suspension lines are cut to correct malfunctions.
- You are below 200 feet above ground level (AGL).
- It is dark, unless you can make a definite determination that the canopy and suspension lines have not been damaged during the ejection and parachute opening sequence, and the ground can be seen. Exercise extreme care even if you are particularly skilled or have practiced this technique.

Note: For the GQ–5000 parachute the red steering toggles open the Le-Moigne slots to allow air in and maneuver the canopy; therefore, a four line jettison modification is not performed and no lines are released in order to steer the canopy (fig. 2–18).

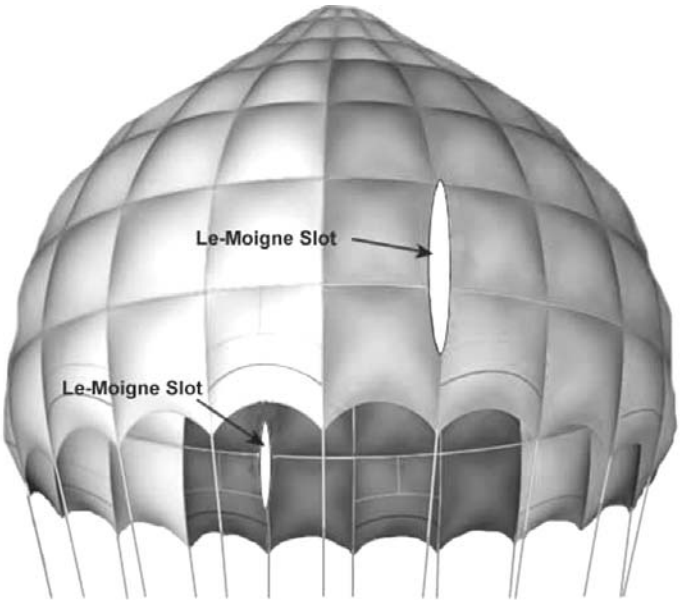

Figure 2–18. Le-Moigne slots in GQ–5000 canopy.

Grasp the lanyard loop and pull down to turn the canopy: the right loop for right turns and the left loop for left turns. Release the tension on the lanyard when the turn approaches the desired direction. If pulling on the lanyard loops does not provide enough leverage, release the loops and grasp the proper riser to accomplish the desired turn. If the four-line jettison fails, there is an alternate method for releasing those same four lines. Locate the inner two suspension lines on each rear riser (1, 2, 27, and 28). Pull down each riser and cut them one at a time using your hook blade knife.

Some parachutes for emergency escape may not be steerable. You can perform limited maneuverability by doing a *slip* (move sideways) in any direction. You can slip by pulling down an arm's length on the two risers facing the direction you want to move. It is difficult to judge when and how much to slip, so do not attempt this unless it is absolutely necessary to avoid an obstacle. Never perform a slip below 200 feet AGL. Note: in the GQ–5000 parachute the cross strap connecting the risers will not allow you to perform a slip.

Preparing to land

With the four-line jettison activated the descent rate slows down and the canopy inherently glides in still air in the direction you are facing at about 5 to 7 miles per hour (4 to 6 knots). Use this drift to your advantage when maneuvering toward a suitable landing area by either increasing or counteracting the drift caused by the prevailing winds. Always give yourself time to turn the canopy to face into the wind for a landing. Do this before 200 feet AGL to avoid an awkward landing attitude. This approach permits canopy glide to counteract the wind to some degree. It also reduces the chance of landing injuries that are more likely to occur in a downwind landing.

It is important to note that when turned into the wind, the canopy has a tendency to go to the path of least resistance; the canopy will want to turn and go with the wind. Be aware of the canopy position and make needed corrections to stay in the wind.

613. Parachute landing procedures

The landscape constantly changes as aircrews fly. Unfortunately, they cannot choose the terrain when forced to leave their aircraft. Here we discuss some of the less desirable landing areas and the specific techniques to help overcome this disadvantage. Post-bailout procedures, ground, power, or telephone

line landings, tree landings, night landings, water landings, and landing in winds over land or water are also discussed.

Regardless of the particular landing situation, there are general post-bailout procedures to follow after the canopy has been deployed, as explained in this table:

Step	***Procedure***
1	Check the canopy.
2	Raise visor.
3	Remove and discard oxygen mask.
4	Deploy survival kit.
5	Inflate life preserver unit
6	Pull four-line jettison lanyards.
7	Prepare for landing.

Again, these are general procedures and must be done as time and conditions allow it prior to preparing for your particular landing environment. The following landing positions assume that the above procedures have been accomplished. Do them in the order presented, with the exception of the water landing, which is explained later.

Ground landing

Keep your eyes on the horizon. Do not look straight down at the ground because it will interfere with your ability to judge distance and create the illusion of ground rush. A proper body position is required to perform a successful parachute landing fall (explained next).

Turn your parachute into the wind and keep it there at 200 feet AGL. Alter this direction only to avoid obstacles (i.e., trees, power lines, aircraft fireball). Place your feet and knees together with the balls of your feet pointed towards the ground. Place your right hand over the right release and your left hand over the left release with your elbows locked. This position keeps the elbows from striking the ground and tightens your stomach muscles.

While maintaining the proper body position, it is important to avoid becoming stiff or too tight, however, maintaining a moderate muscular tension in the legs helps to absorb a significant portion of the landing impact. A moderate degree of tension allows the muscle to withstand a much harder impact than a relaxed one. Keep your eyes on the horizon. Looking down causes jumpers to anticipate the landing either by pulling their feet up or reaching for the ground and can result in a hard landing with the high probability of injury.

Parachute landing fall

Because of the descent rate when hitting the ground, a jumper needs to distribute that force to different parts of his or her body. This way the entire force is taken in segments rather than just on the lower extremities. The five points of contact for the parachute landing fall (PLF) are the *balls of the feet*, *side of one leg*, *thigh*, *hip*, and *the back of the shoulder*. These are all muscular parts of the body and can absorb the impact of a parachute landing.

Begin a momentum shift to the right or left (depending on drift direction) once the balls of your feet contact the ground. Drive one knee into the other in the direction of the PLF to accomplish the shift. Drive your left knee into your right knee for a right PLF and vice versa for a left PLF. This action exposes the second and third points of contact to the ground. Remember to keep your arms in, body moderately tense, and feet and knees together. Begin an upper body rotation once the third point of contact has hit the ground. (This is *not* a twisting of the hips or bending at the waist.)

Tuck your chin in toward your chest and turn it to the opposite direction of the PLF; looking down your body’s centerline at the left or right heel aids in upper body rotation. This action will rotate your

upper body and exposes your hip and lateral muscles of the back to the ground. Allow the momentum of the PLF to complete the follow through.

The follow through is a 90° rotation on the fifth point of contact, bringing your feet toward the canopy. The completed PLF leaves you in a position facing the canopy, allowing you to get to your feet quickly and deflate the canopy if necessary.

In order for you to perform a good PLF, it is important to practice from a low platform (about 4 feet high) until proficient. Practice front, back, and side PLFs until they become effortless. An hour or two of training may save you the pain of a broken limb. A broken limb could make a survival situation much more difficult.

Power lines landing

When it is not possible to avoid power or telephone lines, make your body as streamlined as possible. The following body position provides the best protection (fig. 2–19):

1. Turn your head to the side, either the left or right.
2. Place your hands over your head with palms flat against the inside of the front risers.
3. Keep your feet and knees together and toes pointed downward to avoid straddling a line.

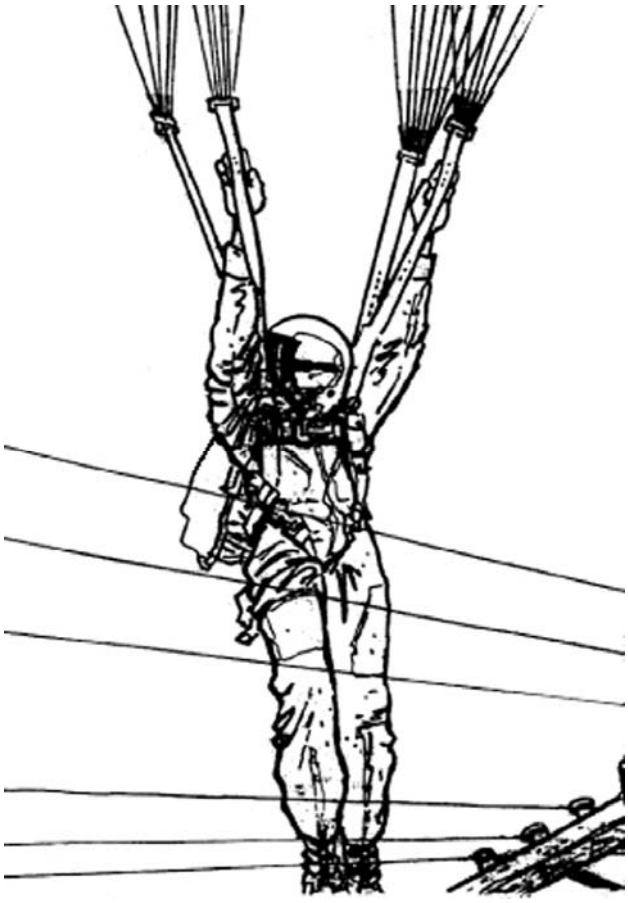

Figure 2–19. Power lines landing body position.

If time permits, jettison the survival kit, when applicable, to prevent possible hang up of the kit on the lines. Because of the likelihood you would be able to pass through the lines, be ready to perform a PLF.

Tree landing

Landing over trees can present serious hazards to the survivor. Branches can break bones, cause lacerations, or cause the parachute to suspend the crewmember above the ground. Normal bailout procedures have to be slightly modified (fig. 2–20) if landing over trees.

Figure 2–20. Tree landing body position.

1. Lower helmet visors.
2. At about 200 feet above the trees, turn the canopy to face into the wind.
3. Keep your feet and legs together.
4. Position your elbows and forearms together in front of your chest. Tuck your chin in toward your chest. Next, place your thumbs along each side of the lower edge of your jawbone with your palms positioned over your face. Keep your fingers together over your nose and mouth, and the outside of the visors. Be sure to protect the underside of your chin and throat.
5. Do not try to stop or slow the descent through trees by grabbing limbs. Be prepared for a PLF in case the canopy does not hang up in a tree.
6. Do not be in a hurry to get down after a canopy hang up. Take a moment and evaluate the situation.
7. Use the PLD (if available) to lower yourself from the tree if necessary.

Night landing

The ground is normally visible at night, but your judgment of the distance may be poor. If it is dark and you cannot see the ground or the horizon, prepare for landing as soon as the parachute opens. Immediately prepare for contact at anytime, but do not anticipate the landing. Statistics show fewer injuries occur during night bailouts because people usually do not tense up for the unexpected.

Water landing

Water landing is very similar to ground landing. The main concern is to be familiar with how to don and operate the life preserver unit (LPU). Air Force personnel use life preservers for emergencies on flights over water. The preservers provide enough buoyancy to support downed aircrew after bailout over water or ditching. Figure 2–21 shows the underarm style LPU 10/P. It is mechanically inflated by a 28 gram carbon dioxide (CO_2) cylinder and has an oral inflation valve in case the mechanical system fails. The two inflated cells are connected with hook and pile tape (Velcro) straps.

Figure 2–21. Water landing body position.

Just because you are landing over water does not mean that you should not be prepared to perform a PLF. The depth of rivers, streams, and other small bodies of water cannot be judged during parachute descent. It is safer to assume the water is shallow and treat the landing as a normal ground landing. Nothing is lost by taking this precaution. The following instructions cover general water landing procedures. Take the following actions after the parachute opens at the preset altitude:

1. Check the canopy.
2. Put visor up and lock it.
3. Discard the O_2 mask.
4. Deploy the survival kit.

5. Activate the LPU (several attempts may be required; if it fails, inflate orally before entering the water; connect the inflated cells together as applicable).
6. Pull the four-line jettison lanyards.
7. Immediately after your feet touch the water, activate the canopy releases. Altitude is difficult to determine in any water landing. Do not release the canopy until your feet have indeed touched the water.

It is possible after a water landing to become entangled with the parachute canopy; try to stay calm and do not kick your feet or thrash around. You can breathe through the canopy fabric, so there is no reason to panic. Keep your legs together at all times to avoid entanglement. If the canopy itself falls over you, find a main seam, which is where one of the suspension lines runs through the canopy from one side to the other. As you work hand over hand, follow that seam backwards, pulling the canopy over your head from rear to front. You will either come to the skirt (outside edge of the canopy) or to the apex (center point of the canopy). If you come to the center, simply find another main seam and follow it to the skirt.

If you become entangled with the suspension lines; you may use the hook-blade knife attached to the right-front riser. Gravity drops the pocket down to the right canopy release when the canopy inflates. A sharp pull will remove the knife from the pocket for emergency use. Use the knife to cut suspension lines to free your body from the entanglement.

Use the preceding procedures day or night after bailing out over water. These procedures should be implemented over land where the chance exists of drifting over water or where position is uncertain.

Landing in winds over land or water

Execute all normal landing procedures and release one or both riser groups by operating the canopy releases immediately after surface impact. On many parachutes activating just one release should be enough to *spill* the canopy. This is not so in the chest-style or parachutes equipped with a cross-connector strap; in these cases, both releases must be activated to release the canopy. If you cannot react fast enough and find yourself being dragged, here are the ways to avoid injury and release the canopy safely.

Dragged over land

If being dragged on your stomach over the ground:

1. Reach high and grab all four risers.
2. Push down on one set and lift up on the other; at the same time turn over on your back.
3. Spread your legs and keep your head up.
4. Dig your heels into the ground
5. Slide your hands down the risers until they come to the canopy releases and activate the releases.

If being dragged on your back, accomplish steps number 3, 4, and 5.

Dragged in the water

If being dragged face down in the water:

1. Hold your head and face out of the water.
2. Spread your legs.
3. Activate the canopy releases.

If being dragged on your back:

1. Spread your legs.
2. Sit up.

3. Place your chin on your chest.
4. Activate the canopy releases.

Self-Test Questions

After you complete these questions, you may check your answers at the end of the unit.

611. Principles of parachuting

1. Who makes the final decision to bail out of an aircraft?

2. What is the best way to escape through a hatch at altitude?

3. What is the primary concern if bailing out above 14,000 feet?

4. Why is it important that the body be stable when the parachute is opened?

5. Why is the military free-fall body position preferred over the spread-eagle body position?

6. What is the only difference in the military free-fall body position below 14,000 feet as compared to above 14,000 feet?

7. What is the problem with the military free-fall body position? When can it occur?

8. What can a person be subjected to if the ripcord is pulled at high altitude?

9. For what can you use the spread-eagle body position?

10. How should the ripcord known as the D-ring be pulled when in the military free-fall body position using a back-style parachute?

11. Out of the two forces involved in parachute deployment, which force is felt first, and what causes it?

12. What are the three variables that affect the opening shock?

612. Parachute malfunctions and handling procedures

1. What should your first action be after your parachute has opened?

2. Describe the procedures for checking the canopy?

3. What are the possible canopy malfunctions?

4. If a malfunction cannot be corrected, what is the maximum amount of suspension lines you may cut?

5. What are the two ways in which a full inversion may occur, and how can you tell?

6. What can be done to correct twisted risers?

7. What is the most serious canopy malfunction?

8. What causes the parachute canopy oscillation, and what is its primary danger?

9. What device serves to reduce oscillation and provides steering capabilities?

10. What are the situations where you would not activate the four-line jettison?

11. When using the alternate method of activating the four-line jettison, which suspension lines should be cut?

12. What will the canopy have a tendency to do after being turned into the wind?

613. Parachute landing procedures

1. Why should you not look down during a ground landing?

2. Under what circumstances will you turn the canopy off the wind?

3. What is the proper body position for a ground landing?

4. What are the five points of contact for a PLF?

5. How do you shift the momentum of your landing when the balls of your feet hit the ground?

6. If time permits, what should be done before entering power lines to avoid entanglement?

7. What is the correct body position for a tree landing?

8. During a night bailout/egress, what should you do after the parachute has opened, and you cannot see the ground?

9. What are the procedures for being dragged on your stomach over land?

10. What are the procedures for being dragged on your stomach over water?

2–4. Survival Factors and Equipment

Air Force aircrews may be exposed to survival situations at any place and time, with others or alone. Therefore, the need to train aircrews in proper survival techniques and increase their awareness of problems encountered in survival situations is of paramount importance. AP technicians are basically concerned with the presentation of survival considerations requiring immediate attention following successful escape from a disabled aircraft. The survival subjects covered in this section are short term in nature; they do not replace instruction presented in other survival training environments. Attention is initially focused on the psychological and physiological factors of survival, followed by some of the survival equipment available to aircrew.

614. Psychology of survival

A survivor's *will to survive* is affected by both psychological and physiological factors; the combined effects of these factors vary from person to person. The most common psychological reactions and physiological needs experienced by downed aircrews are covered next.

A pilot once spent more than 18 hours in an area where the temperature varied from minus –20° to –30° F. According to those who rescued him, he was prepared to survive indefinitely despite an injured leg and a torn index finger. In another situation, it appears a pilot had parachuted safely, set up an effective camp, started a campfire, and then committed suicide. What was the difference between the first pilot's success and the second pilot's failure? It may have been the equipment, the survival knowledge, or it could have been attitude.

The survivor's attitude is the most important element of the will to survive. Almost anything is possible with the proper attitude. The desire to live is sometimes based on the feelings toward another person or thing. Strengthening the will to survive is an essential part of any emergency. Post-egress survival conditions require mental and physical preparation for all types of situations. The psychological aspect (mental preparation) of survival is the most critical factor of the two. Mental attitudes have a considerable bearing on increasing or decreasing survival chances.

Psychological factors

A person's psychological state is an important factor having direct bearing on success or failure in a survival episode. Maintaining an even, positive psychological state or outlook depends on the individual's ability to cope with the following factors of initial shock - finding oneself in a survival situation following the stress of ejection, bailout, or crash landing:

- Isolation
- Insecurity
- Depression
- Frustration
- Loss of self-esteem.
- Loss of self-determination

Depending on the situation, a survivor may depend more on *emotional reactions* than on calm, careful analysis of potential danger. Potential dangers include the enemy, weather, terrain, nature of the in-flight emergency, etc. Whether a survivor panics from fear or uses it as a stimulant for greater sharpness depends more on the survivor's reaction to the situation than on the situation itself. Although there are many reactions to stress, anxiety and fear are the most common.

Anxiety

Anxiety is a universal human reaction. Its presence can be felt when changes occur affecting an individual's safety, plans, or methods of living. Anxiety is generally experienced when someone perceives something bad is about to happen. The expression of *butterflies in the stomach* is a common description of anxiety. Anxiety creates feelings of uneasiness, general discomfort, worry, or

depression. Anxiety and fear differ mainly in intensity. Anxiety is a milder reaction, and its specific cause may not be readily apparent.

Fear

Fear is a strong reaction to a specific known cause. Fear can save a life or lose one. Some people are at their best when scared. Many downed aircrews have been surprised at how well they remembered their training when faced with survival emergencies. They have also been surprised at their strength and how quickly they thought and reacted. The experience gave them confidence in themselves. On the other hand, some people become paralyzed when faced with the simplest survival situation. Some are able to snap themselves out of it before it is too late. However, others are not as fortunate. When fantasy distorts moderate danger into a major catastrophe or vice versa, behavior can become abnormal.

One or more of the following signs or symptoms may occur in those who are afraid; they may also appear because of factors other than fear.

- Quickening of pulse and trembling.
- Dilation of pupils.
- Increased muscular tension and fatigue.
- Perspiration on palms of hands, soles of feet, and armpits.
- Dryness of mouth and throat and higher voice pitch.
- Feelings of ‘butterflies in the stomach’, faintness, and nausea.

Accompanying these physical symptoms are the following common psychological symptoms:

- Irritability, increased hostility.
- Talkativeness in early stages, leading to speechlessness.
- Confusion, forgetfulness, and inability to concentrate.
- Feelings of unreality, panic, or stupor.

Coping with fear

Many people throughout history have coped successfully with the most strenuous situations. They found support in previous training and experience as they adapted to fear. Survivors must act to control fear; they cannot run away from it. Understanding fear, admitting that fear exists, and accepting fear as a reality are important factors in controlling fear.

The next list contains recommendations for coping with fear:

1. Develop confidence. An aircrew member should take advantage of training opportunities that increase the capability to survive by staying physically and mentally fit, and knowing how to use his or her equipment.
2. Be prepared. Be properly equipped and clothed at all times.
3. Keep informed. Listen carefully and pay attention to all briefings.
4. Keep busy. Prevent hunger, thirst, fatigue, idleness, and ignorance about the situation; they increase fear.
5. Know how fellow aircrew members react to fear. Learn to live, work, plan, and help each other as a team.
6. Keep spiritually fit.
7. Cultivate good survival attitudes. Learn to tolerate discomforts. Keep the mind on the overall goal - to survive.

8. Cultivate mutual support. Teamwork reduces fear, while making the efforts of every person more effective.
9. Exercise leadership.
10. Practice discipline. Attitudes and habits developed in training carry over in other situations.
11. Lead by example. Calm behavior and demonstrating control reduces fear and inspires courage.

Fear is a normal reaction to danger. Fear can kill or it can save lives. Some individuals have overcome fear and faced torture and death calmly because of strong religious, moral, or patriotic values. Understanding and controlling it through training, knowledge, and effective group action can overcome fear.

Physiological factors in survival

Despite the importance of overcoming psychological problems in survival situations, the best attitude may not be enough to ensure a successful survival episode. Physiological problems may prevent successful handling of a survival episode and require definitive attention. The following important physiological stresses must be recognized and dealt with appropriately by aircrew members in survival situations.

Pain

Pain, like fever, is a warning signal. It calls attention to an injury to some part of the body. Pain is discomforting, but is not in itself harmful or dangerous. Pain can be controlled, and survival must take priority over pain during extreme situations. Survivors must understand two facts about pain: (1) survivors can move in order to live despite pain and (2) the effects of pain can be reduced by:

- Concentrating on necessities like thinking, planning, and keeping busy.
- Recognizing it as a discomfort to be tolerated.
- Understanding its source and nature.
- Developing confidence and self-respect.

Survivors can tolerate almost anything when the goals of personal safety, life, and honor are highly valued.

Hunger

Survivors commonly experience feelings of hunger and semi-starvation but can go considerable lengths of time without food or experiencing hunger pains. A person can go without food for about two weeks or even longer in some cases. Research shows no evidence of either permanent damage or any decrease in mental efficiency from short periods of total fasting. To reduce the stresses brought on by hunger, make an early effort to find and consume food. A considerable amount of edible sources (which survivors may not initially regard as food) may be available under survival conditions. Hunger can be detrimental to your chances of survival so you must act to obtain food to fill this basic survival need.

Thirst

The lack of water and its accompanying problems of thirst and dehydration are among the most critical problems facing survivors. Thirst can be tolerated for short periods of time if the will to carry on, supported by calm, purposeful activity, is strong. Although thirst indicates the body’s need for water, it does not indicate how much water is needed. Prevention of thirst and the more debilitating dehydration is possible if survivors drink plenty of water any time it is available, especially when eating. The need for water must be satisfied. You can only go without water for approximately 72 hours.

Cold and heat

The average body temperature is 98.6° F. Victims have survived with body temperatures as low as 20° below normal. However, consciousness is clouded and thinking numbed at a much smaller drop. An increase of 6° to 8° above normal for any prolonged period can prove fatal. Any deviation from normal temperature, even as little as 1° to 2°, reduces efficiency.

Fatigue

Survivors will likely have to cope with fatigue and the accompanying strain and reduced efficiency. Be aware of the dangers of overexertion. In some cases, such strain and reduced efficiency can be experienced as a result of other stresses such a cold, heat, dehydration, hunger, and even fear. Available reserves of energy can be called upon when needed when a survivor becomes fatigued.

Personal protection

In addition to the psychological and physiological aspects of survival there are some physical aspects one must consider that could greatly increase the chances of survival. Knowing the basics about personal protection is a key factor in any survival situation. The means for providing personal protection are many and varied. They include such basic concepts as clothing, to how to build a shelter or make a fire. While these individual items may not be necessary in all situations they may be absolutely essential in some environments.

Clothing

People have worn clothing for protection since they first put on animal skins, feathers, or other coverings. When people go outside, they generally do not think about one of the most important survival-oriented assets: clothing. Clothing is often taken for granted. People tend to neglect those things that should be most familiar to them. Clothing is important to staying alive, especially if food, water, shelter, and fire are limited or unobtainable. It also provides protection from physical injuries caused by vegetation, terrain features, and animals and insects such as bites or stings.

Clothing is made from a variety of materials, such as nylon, wool, cotton, and many other natural and synthetic materials. The type of material used has a significant effect on protection. Potential survivors must be aware of both the environmental conditions and the effectiveness of these different materials. This awareness allows aircrew to select the best type of clothing for a particular region.

In addition to selecting the best type of clothing, an aircrew must know how to use and care for the clothing. We don't mean the normal everyday care, but care for survival. The acronym COLDER is used as an aid for remembering how to use and take care of clothing during a survival situation. The basic principles are translated as shown here:

Letter	Meaning
C	Keep clothing **C**lean.
O	Avoid **O**verheating.
L	Wear clothing **L**oose and in **L**ayers.
D	Keep clothing **D**ry.
E	**E**xamine clothing for defects or wear.
R	Keep clothing **R**epaired.

Shelter

Shelter is anything that can protect a survivor from environmental hazards. Some site selection factors must be considered before getting too preoccupied with finding shelter. Air Force Regulation (AFR) 64–4, *Survival Training*, gives detailed techniques and procedures for constructing various types of shelters. For our discussion we will only cover what to take in consideration when deciding to build a shelter. The location and type of shelter built by survivors will vary with each survival situation.

There are many factors to consider when selecting a site to include but not limited to: amount of time and energy required to set up an adequate camp; weather conditions; presence of life; type of terrain; and the time of day.

Weather

Weather conditions are a key consideration when selecting a shelter site. Major factors influencing the choice of shelter type and site selection are dependent on climatic temperature, wind, and precipitation.

Life forms

Consider all life forms when selecting a campsite and shelter type. *Human* life form may mean the enemy or other groups the survivor does not wish to be detected by. Poisonous plants (poison ivy, poison oak, etc.) must be avoided. Large and small animals can also be a problem, especially if the shelter is near their trails or water holes. Insect life can cause personal discomfort, disease, and injury. Mosquitoes, bees, wasps, and even ants can be major problems. Some species vigorously defend their territories with painful stings or bites. Knowing what types of reptiles are present such as poisonous snakes and whether or not they pose a threat is also important.

Terrain

Terrain hazards may not be as apparent as weather and animal hazards. Although they can be many times more dangerous. Four factors must be considered when selecting a shelter site:

- Select an area near water, food, fuel, and a signal or recovery site.
- Select a safe area with natural protection from environmental hazards.
- Have sufficient materials available to construct the shelter.
- Select an area that is both large enough and level enough for the survivor to lie down. (Personal comfort is an important fundamental for survivors to consider.)

If possible, try to find a shelter needing little or no work to be adequate. Rock overhangs, caves, large crevices, fallen logs, or snow banks can all be modified to provide adequate shelter. Ensure natural shelters are structurally sound and not already inhabited.

Time of day

Late afternoon may not be the best time to look for a site to meet that day's shelter requirements. Waiting until the last minute could force the use of poor materials in unfavorable conditions. Constantly think of ways to satisfy needs for protection from environmental hazards.

Fire

The need for a fire is high on the priorities list. Fire provides warmth, light, means for cooking and water purification, signaling, and a method for drying clothes. The body uses fewer calories for heat and consequently requires less food when a fire is used for warmth. Simply sitting by a fire can be a morale booster. Smoke from a fire can discourage insects and is a very effective signal.

Fuel, heat, and oxygen are the three essential elements for successful fire building. These combined elements are referred to as the *fire triangle*. Decide the purpose of the fire, such as cooking or signaling, and prepare all the stages accordingly. Patience is required to be successful in building a fire.

The fuels used for building fires normally fall into three groups, according to size and flash point: tinder, kindling, and fuel. *Tinder* is any small material with a low flash point. It is easily ignited with minimum heat, or even a spark. *Kindling* is the next larger type of fuel material. It should also have a high combustion point. It is added to or arranged over the tinder so it ignites when the flame from the tinder reaches it. Kindling is used to bring the burning temperature up to the point where larger and

less combustible *fuel* material can be used. Unlike tinder or kindling, *fuel* does not have to be kept completely dry as long as there is enough kindling to raise the fuel to a combustible temperature. The type of fuel used determines the amount of heat, smoke and light the fire produces.

Decide the type of fire required after the fuel sources have been gathered. Carefully select the location of the fire. Place all materials together and arrange them by size after the site is selected. The method used to light the fire depends on the fire starter available. If possible, become skilled at starting fires with more primitive means, such as friction or a sparking device, before the need arises. Preparation, practice, and patience are the keys to successful fire building.

Sustenance

Except for the water you drink and the O_2 you breathe, the body's needs are met through food intake. Maintaining a proper diet at all times is extremely important. A sound body stands a much better chance of surviving. Much more energy is expended in survival situations than in the course of a normal everyday job and life. For example, a person at rest, sitting in a warm shelter, may consume anywhere from 20 to 100 calories per hour. In contrast, that same person expends a greater amount of energy taking evasive action through thick undergrowth with a heavy pack.

Survivors should be able to find something to eat wherever they are. Rations placed in survival kits provide some of the sustenance needed during survival emergencies. Survivors must live off the land if rations are not available. Survivors must make every effort to procure food and overcome food aversions to increase the chances of survival.

As we mentioned before, a person can go without food for about two weeks and in some cases longer; however, a person can go without water for about 72 hours. Nearly every survival account details the survivor's need for water. Water may be the first and most important need in temperate, tropical, or dry climates. The priority of finding water must be emphasized over obtaining food since you can go without food longer than without water. The average adult normally requires 2 to 3 quarts of water daily at an ambient temperature of about 68° F. Water loss through sweat can increase to as much as 3.5 quarts per hour during exposure to very high temperatures. Water loss at this increased rate can deplete the body fluids in a short time. Failure to replace body fluids ultimately results in death.

615. Survival and signaling equipment

The US Air Force uses several types of survival kits. These kits are packed for either individual or aircrew use in a container most adaptable to the aircraft and the environment where the flight operations will be conducted. Unless directed otherwise by MAJCOM commanders, the mandatory components for all individual survival kits are:

1. Life raft, one-person.
2. Compass, lensatic.
3. Signal flare(s) MK–13 or MK–124.
4. Mirror MK–3 (available in two sizes).
5. Signal kit, foliage-penetrating personnel distress-type A/P 25S–5A.
6. First-aid kit.
7. Radio set.

TO 14S1–3–51, *Operations and Maintenance Instructions for Survival Kit Components and Container Assembly*, outlines the mandatory items installed in each container plus the optional items MAJCOM or base-level authority may make mandatory. Additional or optional items are chosen because of their potential usefulness. Desirable and "nice to have" components should not be given consideration because they only tend to cause kit over packing and possible kit failure. Consider only the following when choosing items:

- Signaling devices.
- Life-sustaining and protection items.
- Escape and evasion items.

Survival kits come in various configurations, depending on the geographical location and climate. Only a few of the common items used in survival kits are discussed because there are so many kinds of components. The items discussed in this lesson may or may not be a part of the survival kits used on the aircraft in your geographical region. However, there is one common element in the kits regardless of geographical location: Air Force Tactics, Techniques, and Procedures (AFTTP) (I) 3–2.26, *Survival, Evasion, and Recovery.* This publication is designed to give you virtually all the information needed to aid in survival and rescue efforts regardless of geographic location or climatic condition.

Life raft, one-person

The life raft (fig. 2–22) is a pneumatic boat-shaped raft to fit one person. It has a single flotation tube made of rubberized nylon material. It has an inflatable floor and canopy which is orally inflated after the raft is boarded. Two inflation tubes are provided for this purpose. The inflated canopy can also be used to increase the raft's height under heavy sea conditions. A beacon and distress light are stowed in inside pockets.

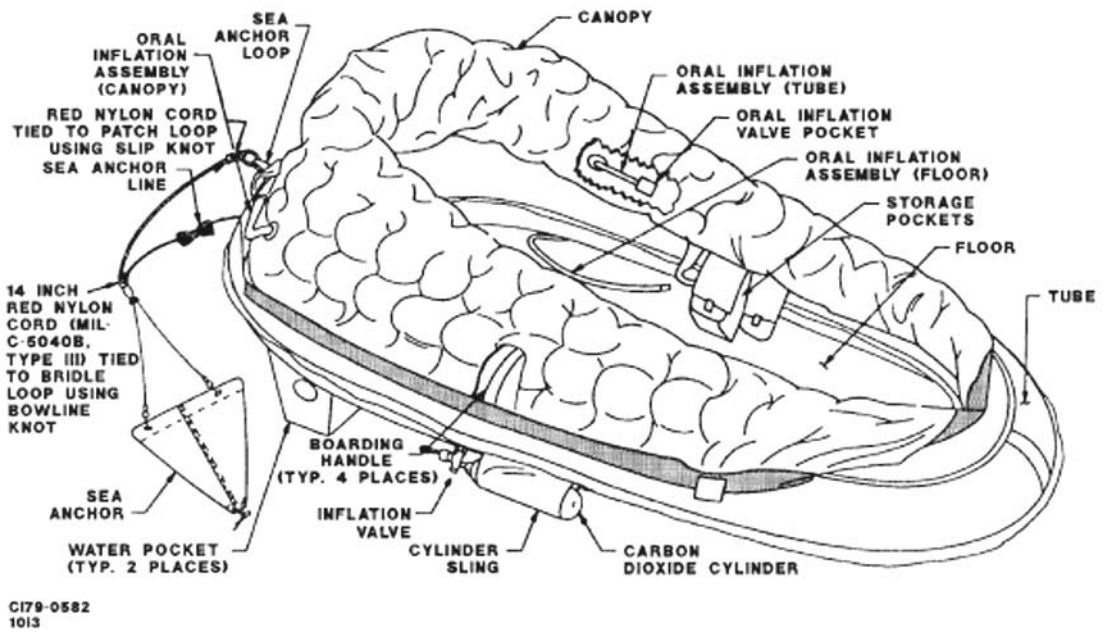

Figure 2–22. One-person life raft.

All aircrews receive training on how to operate and board the raft so they are familiar and better prepared if needed. The raft is recovered by pulling on the life raft lanyard attached to the kit or seat pan, and boarded from the small end. There are four boarding handles to help you board. Releasing one side of the survival kit from the parachute harness may make it easier to board the raft.

Retrieve the survival kit attached to the harness after boarding the raft. Retrieve the equipment container by pulling in the drop lanyard. Do not remove the harness because this equipment could get lost if the raft capsizes. Retain the harness because it may also be used in the rescue recovery operation. Loosen the parachute straps for immediate comfort. Prepare your signaling devices so you are ready to assist in the rescue.

Compass

The magnetic compass is the most commonly used and simplest instrument for measuring directions and angles in the field. The lensatic compass (fig. 2–23) is the standard military magnetic compass. Special features for night use include luminous markings, a bezel ring, and two luminous sighting dots. The floating compass should rotate freely when the compass is opened and the sights are raised. Always hold the compass level and firm when sighting on an object. There are several techniques for holding a compass and sighting. One way is to align the sighting slot with the hairline on the front sight in the cover and the target. The most important use of the compass is for vectoring (directing) rescue aircraft to your position. Reference TO 14S1–3–51 and AFTTP (I) 3–2.26 for complete information on using a compass.

Figure 2–23. Lensatic compass.

First-aid kit

This kit is designed to provide immediate first-aid supplies during escape and evasion situations. First-aid kits may contain toilet articles, minimal nourishment, and other minor accessories along with basic first-aid items.

Signaling equipment

Several different types of signaling devices are included in survival kits. They range from mirrors, whistles, and strobes to pyrotechnics, beacons, and radio sets. The beacons and radio sets discussed next are the most commonly used signaling devices available.

Beacon

The AN/URT–33 series beacon sets are packed in parachutes, survival kits and life raft accessory kits. They are designed to be a first alert device in non-hostile environments by automatically notifying rescue forces. They are sealed units, preset by the manufacturer to transmit at 243.0 megahertz (MHz) (guard) frequency, and to transmit only an emergency tone. They do not transmit or receive voice signals. These beacons are a *line of sight* (LOS) transmitter; therefore, the signal is disrupted by trees, dense foliage, canyons, buildings, or any type of large obstacle. Also, if the unit is submerged under water it will not transmit a receivable signal.

The URT–33 beacon (fig. 2–24) is equipped with an instruction plate, OFF/ON switch, and telescopic antenna. A flexible antenna can also be attached. A plastic plug is inserted in the beacon to prevent premature activation of the beacon. This plug is pulled out as the parachute canopy deploys. The URT–33C features a timed mode for transmission. The beacon transmits for 10 (+2) minutes when

timed mode is selected. The beacon uses light-emitting diodes (LED) to indicate transmitting or timed out status. To operate in continuous transmit mode, use a small screwdriver to turn the mode switch so the triangle mark is aligned with the CONT mark on the switch plate. The beacon then transmits continuously until turned off or the battery dies, which is approximately 15 hours.

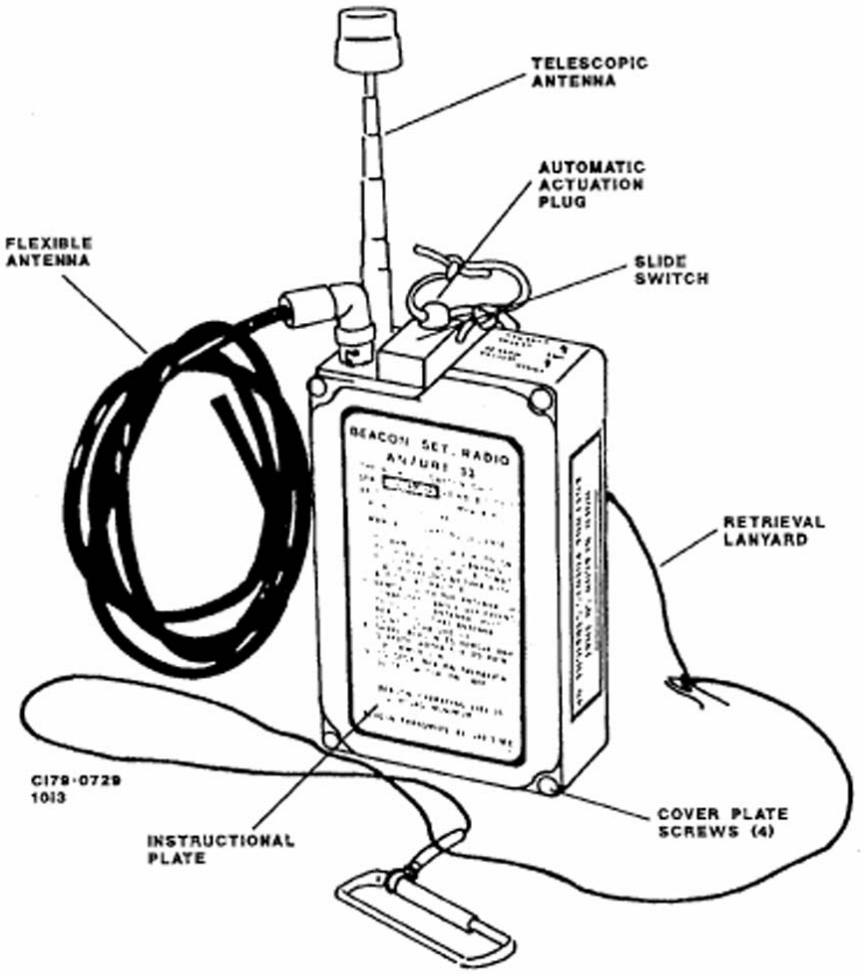

Figure 2–24. AN/URT–33 beacon.

Survival radio

This equipment provides immediate, readily recognizable communication from the downed aircrew to the rescue personnel. The AN/PRC–90 radio set (fig. 2–25) is a dual-channel, waterproof, self-powered, personal, emergency rescue transceiver. It provides two fixed operating frequencies: 243.0 MHz (guard) and 282.8 MHz (alternate). The PRC-90 also transmits an emergency signal tone. It incorporates a combination flexible and telescopic antenna, battery, and miniature earphone to permit quiet operation.

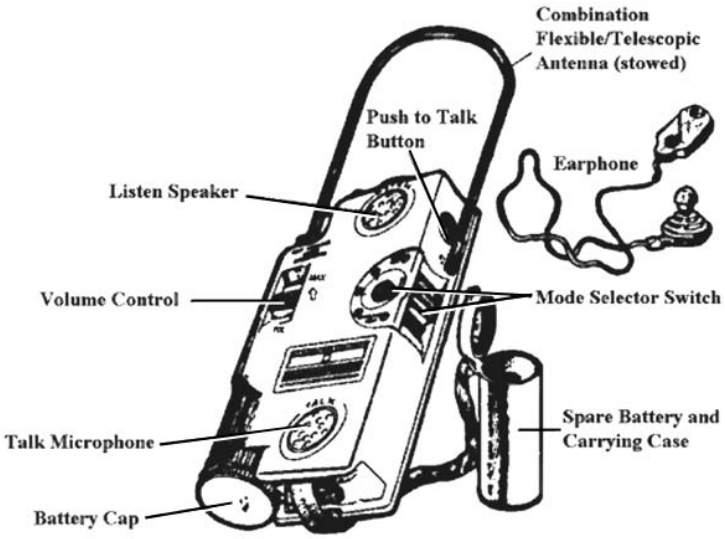

Figure 2–25. PRC–90 survival radio.

The PRC–90 is also an LOS communication device. Therefore, it must be operated in a clear area, free of trees, hills, or other major obstructions whenever possible. Hold the radio with the antenna essentially vertical and ensure it is fully extended. An automatic direction finder (ADF) is incorporated within the design of the radio and gives a range of 50 nautical miles to an aircraft operating at 10,000 feet.

The AN/PRC–112 radio (fig. 2–26) represents a major improvement over the PRC–90 in both function and capability. There are several different models, but for the purpose of our discussion, we focus on the AN/PRC–112B1 and the applicable equipment which is referred to as the HOOK–112 system. This is a combat survival radio with global positioning system (GPS) and interrogation functions. The B1 radio, in conjunction with the equipment in the HOOK–112 system, assists air and ground personnel in locating downed aircrew members. This radio has data and voice communication capabilities and it has a low radio frequency to reduce the risk of transmissions being intercepted.

Figure 2–26. PRC–112 survival radio.

The B1 radio unit has all the radio functions of the original 112 radio (voice, beacon, and direction measuring equipment (DME), plus the GPS and text messaging capabilities. It also has five different frequencies depending on the mode selected (Beacon, DME Transponder, GPS Transponder, etc). In the DME mode of the radio function an airborne interrogator will “ping” the radio using the radio’s identification (ID) code. The radio responds automatically with ranging pulses that give the airborne interrogator bearing and distance to the survivor.

The GPS functions are similar to a handheld GPS unit but with two added features: first, it can transmit its position to an airborne interrogator aboard search and rescue aircraft or through airborne relays, such as unmanned aerial vehicles, and secondly it can transmit and receive text messages. Both the GPS and the message information are encrypted before transmission to prevent the enemy from learning about the survivor’s location and status. These features reduce search time and threat to recovery crews.

MK–13 and MK–124 signal flares

The MK–13 is a hand-actuated, combination day-night distress signal. It consists of a divided metal tube closed at each end with a soldered cap. Each end is equipped with a pull ring and is protected with a plastic or paper safety cap. The day end (smoke) of the MK–13 is indicated by an orange, smooth-lip, plastic cap, and the circumference of the flare is smooth. It contains an orange smoke mixture designed for daylight signaling. The opposite end (fig. 2–27) is covered by a red plastic cap with bumps around the flare to help identify it in the dark. It contains a pyrotechnic composition (similar to a railroad flare) designed for night signaling. A cord with a metal ring is also attached to the actuation pull ring. Either end of the signal burns for approximately 18 seconds. The smoke signal can be seen for a distance of 7 miles on a clear day. The flare signal is visible at night up to 30 miles (from altitude). Protect the hands with flight gloves or other covering during activation. The MK–124 is similar to the MK–13. However, the flare or smoke is activated by a mousetrap-type igniter, accessible when the cap is removed from the end to be ignited.

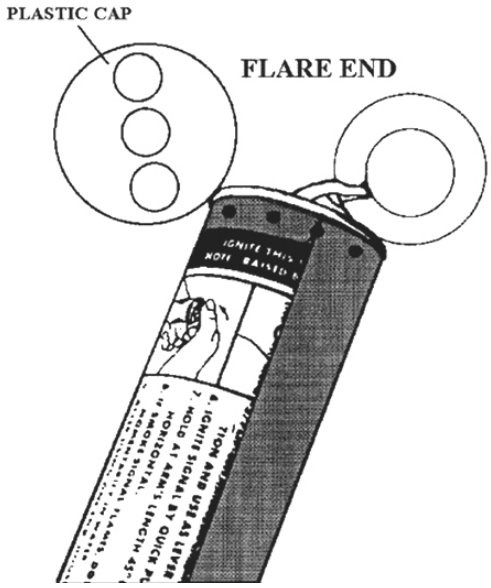

Figure 2–27. MK–13 flare - night end.

Signal kit (gyro jet)

The foliage-penetrating personal distress signaling kit, A/P25S–5A (fig. 2–28), consists of a hand-held launcher, seven signal cartridges, and an instruction card. The signal cartridges are normally red flares, but they may be green or white as well. The foliage-penetrating action is produced by a rocket

motor that stabilizes the cartridge while in flight and a delay fuse that ignites the flare when it reaches altitude. To activate the signal kit:

- Fit a single cartridge into the launcher.
- Hold it at arm's length at a 45° angle, aim the flare into the wind, and turn your head away.
- Pull the trigger down the slot and release.

Use flight gloves or other covering to protect your hands during cartridge activation. The foliage-penetrating signal attains an altitude of 700 to 1,250 feet and burns for approximately nine seconds.

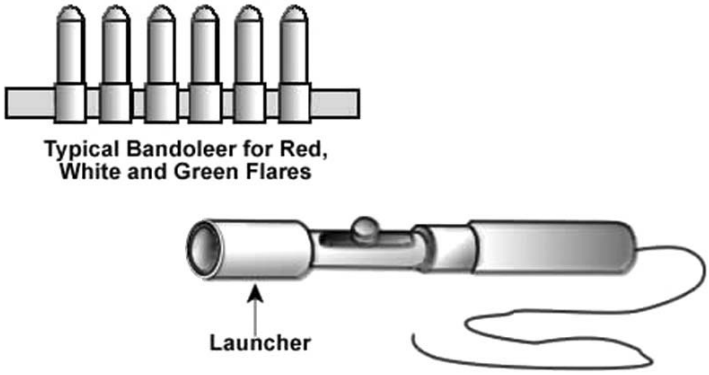

Figure 2–28. Personal distress kit.

Signal mirror

The signal mirror is the most underrated signaling device in the survival kit. It is underrated because it is virtually self sufficient, requires no batteries, and if broken provides for numerous signaling devices. It is the most valuable mean of visual signaling during daytime. A mirror flash has been visible up to 100 miles under ideal conditions; the mirror also works on overcast days. Most kits include a MK–3 signal mirror. The MA–23, buoyant signal mirror, is another mirror that is virtually unbreakable. It is 2 × 3 inches, weighs .75 ounce, and offers a removable, non-glare vinyl shield to prevent scratching and inadvertent flashing. It provides a brighter reflection than the MK–3. The signal mirror's obvious use is to signal an aircraft. It also can be used to inspect your body for insect bites, cuts, or other wounds.

Whistle

The green plastic whistle packed in kits or containers has a retention cord of 30 to 36 inches. A whistle can be invaluable in a survival situation. The piercing sound of a whistle can travel for miles over water. This is especially important at night or if the day is foggy. Blowing the whistle on land helps separated aircrew members locate one another. Blowing a whistle can also scare off dangerous animals.

Strobe lights

The SDU–5/E strobe light (fig. 2–29) equips aircrews with a high-intensity visual distress signal for use during night rescue. It is a lightweight, compact, battery-operated portable unit. The case has a push-on-/push-off type switch to permit one-handed operation. A flash guard is available as an accessory to the unit. The flash guard helps to concentrate the light to the end of the beacon rather than off to the side. This is very useful in keeping people on the ground from seeing the flashes of light. The strobe light is simple to operate. To turn it on, push the switch in until you hear a click, then release. The light begins flashing within a few seconds. To turn it off, push in the switch, and then release.

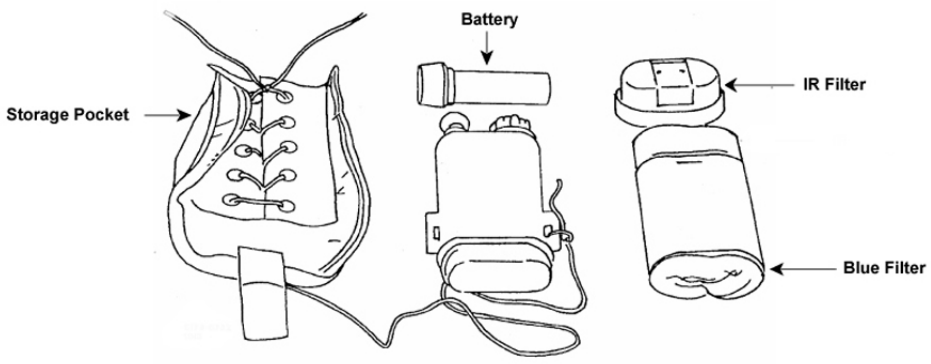

Figure 2–29. SDU–5/E strobe light.

The latest version of the strobe light is the MS–2000. It is a hand-size military strobe light. Some of the features of this strobe light are a built in blue and an infrared filter cover, operated by two "AA" batteries. It provides 250,000 peak lumens, has a flash rate 40 – 60 per minute and is water proof up to 50 feet. It has a 1-mile visibility minimum and has been tested up to 6 miles on a clear night. The battery life has 8 hours minimum, 18 hours intermittent.

To operate the MS–2000, press down on thumb switch while sliding forward until it clicks in the ON position. The light will begin its cycle within a few seconds. Lift and rotate infra-red away from lens, if desired. Extend green outer case to expose the flash guard (blue filter), this helps to distinguish the light flash from small arms fire and it prevents illuminating side flash. The lens cover is also used at night with night vision goggles (NVGs).

Self-Test Questions

After you complete these questions, you may check your answers at the end of the unit.

614. Psychology of survival

1. What is the most important element of a person's will to survive?

2. What aspect of survival is the most critical?

3. What are the two most common emotional reactions to stress in a survival situation?

4. When is anxiety experienced?

5. Name four physical symptoms of fear.

6. What are three ways of developing confidence in survival abilities?

7. List four ways of coping with fear.

8. What are two factors of pain a survivor needs to know?

9. What are the four ways in which pain can be reduced?

10. How long can you survive without food?

11. How much deviation from normal body temperature reduces your efficiency?

12. Fatigue can be experienced as a result of what other stresses?

13. What areas of concern regarding clothing are covered by using the COLDER principle?

14. What is the definition of shelter?

15. What factors dealing with weather should be considered when building a shelter?

16. What are the three elements needed for a fire?

17. What is placed on top of tinder so the flames can ignite it?

18. Why should more emphasis be placed on procuring water than food?

615. Survival and signaling equipment

1. Unless directed otherwise, what are the mandatory components for all individual survival kits?

2. When choosing items to add to a kit, what three areas should be considered?

3. What items are stored within pockets on the one-person life raft?

4. Once you enter the water, how is the life raft recovered?

5. What is the most commonly used instrument for measuring direction and angles in the field?

6. What are the specific features on a lensatic compass for night use?

7. What are the most commonly used signaling devices available in survival kits?

8. What frequency does the AN/URT–33 beacon transmit over?

9. What is the expected battery life of the AN/URT beacon when operating in the continuous mode?

10. What are the two voice frequencies offered on the PRC–90 survival radio?

11. What are some of the added features in the PRC–112B1 radio?

12. Why must the survival radio be used in a clear area free of trees, hills, or major obstructions?

13. How can you identify the night end of a MK–13 distress signal?

14. What is the approximate burn time for either end of the MK–13 distress signal?

15. What are the maximum viewing distances for the day and night end of the MK–13 distress signal?

16. What items make up the foliage penetrating personal distress kit?

17. What are the procedures for firing the personal distress kit flare?

18. What signaling device is the most valuable means for daytime signaling?

19. What are the three ways the whistle can be used in a survival situation?

20. What is the intended use for the SDU–5/E strobe light?

2–5. Crash Survival

Whether we are on official business or leisure, we all have the need to fly at one time or another. Flying is safer than any other mode of transportation; however, accidents do happen. Aircrews and passengers alike need to have an idea of what to do to increase their chances of survival when they are involved in an accident. This section provides information on what aircrews and passengers should do if they are faced with an aircraft about to make a crash landing. The discussion is divided into three parts: precautions before flying, surviving a crash, and post-crash hazards.

616. Preflight precautions

This lesson discusses information to help aircrews survive a crash. You will learn some basic steps for increasing aircrew survivability and the actions to take before and during a crash. Aircraft crashes and the hazards faced after the crash are covered in a subsequent lesson.

Aircrew must know what to expect and what to do in order to survive a *survivable* crash. One way is to become familiar with the different escape procedures for various aircraft, military and civilian. Consider the following crash event:

> A British Airtours Boeing 737 at Manchester International Airport in England experienced an engine failure during takeoff. A warning bell sounded and the captain abandoned the takeoff 9 seconds after the engine failed. The aircraft came to a smooth stop and the rescue services arrived promptly, but 54 people had already died. In this accident, a fire broke out and quickly found its way into the passenger cabin. Although 78 passengers and four crewmembers safely escaped the aircraft the others perished after inhaling the toxic smoke produced by the fire.

The preceding accident shows how many people survived the initial impact, but unfortunately did not survive afterwards. It is possible they lacked the knowledge of post-crash hazards, proper evacuation procedures, or the imminent dangers of smoke inhalation. However, anyone can be educated on how to survive in similar circumstances. Impact shock, flying debris, aircraft breakup, fire, smoke, fumes, and explosion are some of the many hazards faced during aircraft crashes. Take the time to understand and consider each, for they are the primary causes of fatalities and injuries. Not all aircraft crashes are 100 percent survivable; still, some are more survivable than others. In any case, preparing to fly before boarding and taking the time to read the emergency/safety instruction card, are all ways to increase the chances of *surviving a survivable crash.*

Know where the exits are

Always know where the exits are. Take the time to learn aircraft exit locations and fix them in your mind. If sitting nearby or next to an exit take the time to read about how the specific exit operates

(fig. 2–30). Mentally count the number of seat rows from your seat (fore and aft) to the nearest exits. Visibility is low in smoke-filled cabins, so you will have to crawl on your hands and knees and follow the floor lights to get to an exit on most commercial aircraft. Count the number of rows while crawling towards the exit if the floor lights are not visible. It took about one minute and 10 seconds to open the front-right starboard door in the Manchester accident, delaying evacuation. Opening the right over-wing exit was also delayed because the instructions were not clear to the nearest passenger. The passenger said the arm rest of the seat next to the door interfered with the opening and removal of the 40-pound door. Knowing how to operate and use these exits is to your advantage; you may save many lives, including your own. Furthermore, the flight attendant may be unavailable or injured. Check outside the exit before opening it and do not open the exit if there is a fire outside. A fire inside the aircraft depletes O_2 and sends temperatures soaring. Find another exit if the line at one exit is moving slowly; do not push your way through.

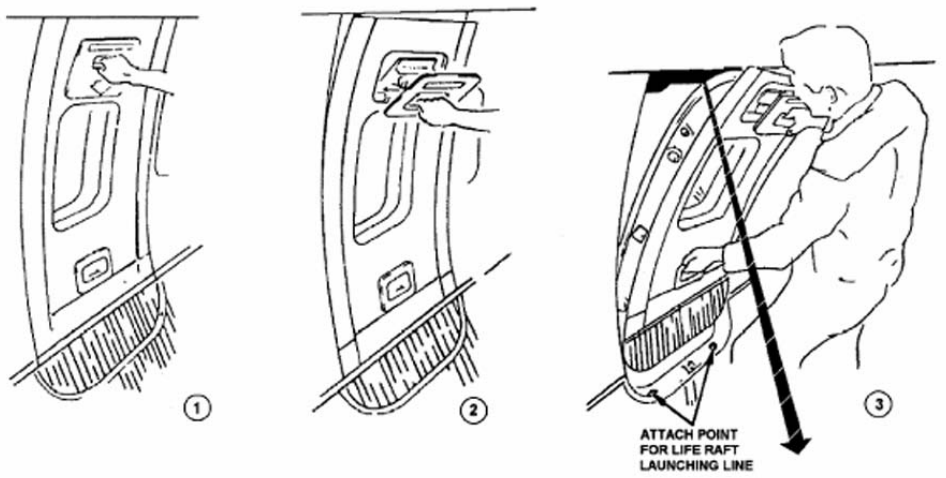

Figure 2–30. Aircraft exit operation.

Dress to survive

People dress for comfort when they fly. Being comfortable sometimes means wearing clothes that could be hazardous in an aircraft fire. Clothing is made of both natural and artificial fibers. Natural fibers include cellulosic fibers such as cotton and linen, and protein fibers such as silk, wool, cashmere, or animal hair fibers. Artificial fibers are either regenerated fibers or synthetic fibers. Rayon is a major regenerated fiber made from dissolved cellulose and is similar to cotton. Acrylics, thermoplastic fibers (nylon), and polyester are the major fully synthetic fibers. The different burning qualities of each fiber or textile should be taken in consideration when choosing what to wear when flying.

All these materials burn, ablate (burn away or vaporize), or intumesce (swell/bubble up), but at different temperatures. Natural cellulosic and protein fibers are best because they do not melt. Wool is the best of these natural fibers because it does not readily support combustion, burns more slowly, and is easier to extinguish than cotton. Although cotton burns, it does not stick to the skin. Most artificial fibers burn and melt. Nylon against a polyester or cotton shirt quickly burns. However, the combination of nylon and polyester becomes limp or shrinks if it is not in direct contact with a burning outer cover. As the fabric contracts the heat it retains causes a burn injury without actually burning.

Artificial fibers have a lower ignition point than natural fibers. The burning and melting of these fibers over the skin would have to be surgically removed. Aircrew members should not wear clothes made of these synthetic fibers when they fly. Clothing can be tested by holding a match to a swatch of

the fabric to see what happens. Also, be sure to wear a full covering of clothing when flying. Wearing shorts or short-sleeved shirts increases your vulnerability to burns.

Weather and terrain are other factors to consider. Nature supplies us with rain, snow, sleet, cold, heat, etc. The environment provides its own surprises with rugged terrain, jagged rocks, steep cliffs, and more. Some people may not consider the weather at their destination or the terrain they fly over. Some dress for comfort and fashion; but flying in a fashionable way may not be in their best interest. Wear long sleeves and pants to shield you from possible flames and heat. Wear loose fitting clothes because tight fitting clothes allow heat to transfer through to the skin. Wear multiple layers of clothing that offer more protection than a single piece. If that seems silly, take a jacket to wear during take-offs and landings. An outer garment provides added protection if the worst happens.

High-heel shoes and sandals are the worst foot covering. The sandal, with its open areas, offers virtually no protection. Do not remove your shoes when flying. Shoes help protect the feet from fire or hot metal during a crash or fire. However, consider removing high-heeled shoes to keep from twisting or breaking an ankle during the rush to the exit. Another good reason to not wear high heels is to avoid puncturing of the escape slide.

Aircrew members must keep their *flight clothing* in good repair and free from oil and dirt. They must also wear it properly (especially during take-off and landing). The sleeves should be rolled down all the way, the collar up to protect the neck, and the zippers closed. Gloves should be on and the boots laced tight. The flight jacket should be worn or kept close when removed. The flight jacket gives added protection for the upper body. Aircrew members should wear a helmet if they have one. All of this life-saving gear does no good if it is not used to the best advantage.

The *Nomex* flight suit and gloves are flame-resistant that can withstand temperatures between 700° and 800° F. However, *Nomex* is not immune to fire; and at that temperature it begins to char and burn. *Nomex* helps give the aircrew member extra time, possibly enough to make the difference between survival and death.

Seat selection

Selecting a seat within an aircraft may or may not be your choice. However, it is important to know how your location within the aircraft decreases or increases your chances of survival. Statistics are inconclusive for identifying the safest seating area, but experts agree that the best seat for surviving the initial impact is in the rear of the aircraft. It makes sense to sit as far away from the impact point as possible. However, a seat near or over the wing where four window exits (two on each side) are normally located, provides an excellent position for exiting the aircraft once it stops. Also, aisle seats enable quick movement into the aisle to prepare to exit.

Referring back to the Manchester accident, about 50 passengers stated they had a difficult time getting out of the aircraft. One passenger said a lady with ‘bad joints’ who could not walk quickly, delayed the evacuation. Probably if everyone had prepared for the possibility of a crash, they would have done a better job during and after the emergency.

Listen to the attendant

Pay close attention to the emergency procedures briefing before each aircraft flight. Even experienced flyers should pull out the safety instruction card and follow along. Aircraft safety exits are often different from one aircraft to the next. According to a National Transportation Safety Board (NTSB) study of actual B–747 evacuations, 55 percent of the passengers who did not read the safety instruction card received injuries. Conversely, only 16 percent of those who read the card were injured. The few minutes required to read the card could help prevent injuries or even save a life.

617. Crash forces and body positions

We discussed some general characteristics about aircraft crashes and some ideas on increasing survival chances. If a crash takes place you should remain calm and follow any instructions the

aircrew or attendants give about preparing for the crash. Once the aircraft is on the ground and no longer moving, there are other steps you can take to help everyone involved (aircrew and passengers) get to safety. Let us take a look at how to prepare for the crash itself.

Dealing with rapid deceleration and impact

The rapid deceleration of forward movement and accompanying impact shock generate G-force stress on all aboard. These are the initial forces that must be dealt with when the aircraft impacts the ground and comes to a stop.

G-forces

During a crash considerable G-forces can be generated and act upon the body. Tolerance depends on body positioning, use of safety equipment, and elapsed time. In the 1950s, Colonel John Stapp pioneered research into the effects of acceleration and deceleration forces at the White Sands Missile Range. He demonstrated that people could survive a forward deceleration of 35 Gs without serious injury. His work paved the way for increased aircraft safety measures and equipment design capable of surviving the same forces a person could survive. Additional research shows the human body can survive a 25 G stress without injury. In fact, a properly restrained individual can theoretically survive a forward impact from 150 miles per hour (MPH) (the normal landing speed of an airliner) to a dead stop in .25 second.

Impact shock

The impact shock of the sudden deceleration from 150 MPH to a dead stop in .25 second is another factor to consider. The airframe twists and buckles, dislodging passenger seats which could block the aisles and exits. The typical airline seat withstands a forward velocity of just 9 Gs; however, the seat could fail at 5 Gs or less in a vertical impact. The NTSB statistics indicated seat failure cause 47 percent of passenger injuries. Better seat design could reduce this figure but doing so adds weight, meaning increased fuel usage which, in turn, increases operational costs.

Baggage from the overhead storage compartments or under the seats can end up flying about the cabin. This loose baggage and other flying debris can block exits, cause injury, or even knock someone unconscious. Following the initial impact the *secondary impact* occurs; this is the ‘rebound’ effect which causes the head to slam back against the headrest. The impact of these forces can be minimized by properly positioning the body for the crash.

Body positioning for the crash

Proper body positioning in preparation for impact is an important survival element. The human body is surprisingly tough and can withstand great stress for short periods of time. When faced with a crash situation, always review the safety card and follow the flight attendant’s instructions. Position the belt across your hips (not on your stomach) and tighten the seat belt as tight as possible to help keep you secured on your seat during deceleration. Assume the proper brace position to help prevent serious injury.

On commercial flights, passengers face towards the front of the aircraft. However, the aircrew and passengers in military aircrafts may face forward, backwards, or even sit sideways. Prior to impact everyone should assume the proper *bracing position* according to their seat location. When facing forward, put your head on your knees and grasp your ankles with your hands. When facing towards the rear of the aircraft sit up with your arms folded across your chest or place your hands under your buttocks. This hand position keeps your hands and arms from flailing about and becoming injured (fig. 2–31). Use the rear facing position when sitting on seats facing sideways.

Whatever the position, assume it as tightly as possible. Prepare not only for the initial impact but also for the secondary impact and final stop. These forces act as a whiplash effect and can cause a great deal of personal damage. The brace positions help in reducing injuries when done correctly.

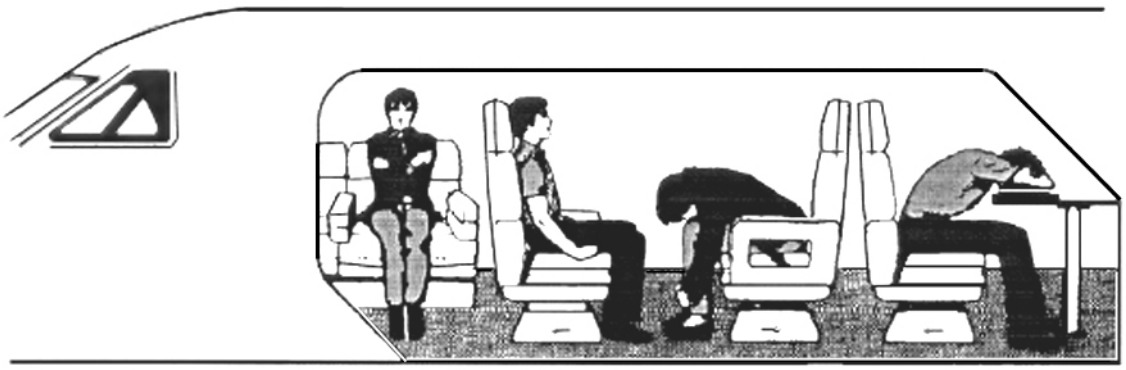

Figure 2–31. Brace position for sitting backwards.

618. Post-crash environment and egress procedures

Aircraft accidents are discussed in order to provide valuable information should an accident occur. This lesson covers the causes of aircraft accidents, what happens during the crash, and the post-crash hazards that survivors may face.

Aircraft accidents

Many conditions can keep the aircraft, the aircrew, and passengers from arriving at their destination: engine failure, structural damage, flight controls malfunction, onboard fire, rapid decompression, bird strike, and weather, among others.

There are many different *causes* of aircraft accidents. Problems with aircraft control surfaces are one of the most common causes of accidents. Poor weather conditions can cover the control surfaces with snow or ice or interfere with the wing's ability to lift the aircraft. The control surfaces may not be properly set. Any of these conditions can cause an aircraft to lose its lift or control at anytime, potentially leading to a crash. Put very simply, this problem creates a situation where the aircraft is unable to fly. The *first* and *last five minutes* of a flight are considered the *most critical times* because of the importance of control surfaces. Aircraft control surfaces undergo considerable change during these periods, more so than any other time during flight. Wing surfaces are also critical. Other potential causes include:

- Poor runway conditions from lack of maintenance at remote sites.
- Landing gear not extending.
- Landing gear malfunctions at touchdown.
- Improperly fastened cargo (cargo shifts can throw the aircraft off balance).
- Engine disintegration at take-off, causing a high-speed abort.
- In-flight emergencies: fire or smoke, loss of hydraulics, decompression, etc.

Any of these events could make an aircraft a less than acceptable flying machine. Always prepare for any eventuality whenever flying, including a crash and its aftermath.

What happens during a crash

Many events occur very rapidly and almost simultaneously in a crash. For example, overhead baggage compartments open easily when the aircraft hits a pocket of turbulence. Everything unsecured continues traveling in the same general direction as the aircraft quickly decelerates. As the aircraft slides to a stop, the fuselage buckles and twists, forcing storage bins to open and spill their contents. Carry-on bags and other personal effects may be tossed about the cabin. Both civilian airliners and military aircraft have loose objects inside. These same crash forces may dislodge the seats and seat tracks can rip loose as the aircraft careens along its path. As the seats move with their

occupants they can injure or even crush people in the process. The stowed tray tables can become another problem. The simple latches can easily move, causing tables to open and block the pathway. These are just a few examples of events occurring during a crash. The results of a crash may include some or all of these: aircraft breakup, fire, smoke and fumes, and explosions with massive fires. We look at each one of these in the remainder of this lesson.

Aircraft breakup

No two aircraft, even of the same type, break up the same way. Predicting how a specific aircraft will impact is impossible. It can hit tail or nose first. The tail has a tendency to break off in many large aircraft. The tires could blow during take-off or landing or a wing could touch the ground due to ice, snow, or wind. If a wing hits first, the aircraft could cartwheel, throwing everything outward.

An aircraft landing on its belly can force baggage into the cabin and dislodge seats, possibly blocking the exits. A fire can enter the cabin environment if the cargo breaks loose and splits open the fuselage. The weight of C–5A, C–17, or C–130 (high-winged aircraft) wings could break open the fuselage and spill fuel everywhere.

In many accidents, spilled fuel ignites when the engines scrape against the ground and break off. Hydraulic lines may break and leak fluid on the floor, making it very hazardous to walk. The cabin usually splits in one of several areas when it ruptures: behind the cockpit, just forward of or just behind the wing spar, or at the tail. The rupture creates jagged pieces of metal that can easily cause injury.

Post-crash hazards

The danger is not over once impact and aircraft breakups occur. The post-crash environment can be very dangerous and threaten survival. Being knowledgeable about the threats faced at this stage can increase survival chances. The major post-crash hazards are fire, explosions and accompanying fires, smoke, and toxic fumes.

Fire

Although the public may believe most commercial aircraft accidents have fatalities, only 15 percent of the accidents actually involve the death of one or more persons. However, the chance of survival decreases significantly if there is a fire. Fire is a significant threat in any crash. Most aircraft store fuel in their wings. Thousands of gallons of fuel can spill when a wing (or fuel cell) ruptures. Fire becomes the most prevalent part of the accident when a spark from a skidding aircraft, flames from an engine breaking off, or any source of ignition is added. A fire will probably not occur if the aircraft fuel remains contained. Many airliners store fuel in their wings and belly, making the fuel tanks vulnerable to impact damage. Military cargo aircraft such as the C–5A, C–17, and C–130 for example all have wings mounted high on their fuselage. These aircraft have a much lower chance of a fire when involved in a minor accident.

Another factor to deal with is the *superheated air* that can come with the fire, creating a *firestorm* inside an open cabin. The aircraft acts as a chimney in this situation, and the fire consumes the cabin air. This fire can reach speeds exceeding 30 MPH and create temperatures exceeding 300° F. The human respiratory system can tolerate a maximum temperature of 390° F for a very limited period. The firestorm can reach its peak within two minutes during an aircraft fire. Inhaled hot air can singe the throat and lungs, causing loss of consciousness and then death from other means. Statistics show fire accounts for 40 percent of all crash injuries and 20 percent of the deaths.

Explosions and accompanying fires

An explosion or massive fire can occur because the fuel can spontaneously ignite as the aircraft impacts the ground (or very shortly thereafter). The hazards are obvious. Explosions cause a pressure change. A large pressure change can cause unconsciousness, lung damage, burst eardrums, etc. Any one or all of these effects make survival even tougher. A massive fire is not much better, but it may

give survivors more time to escape the aircraft than an explosion does because the pressure change and immediate physical damage are not present.

The fire begins moving into the cabin after it ignites. There it feeds off spilled fuel, engine oil, hydraulic fluid, and cabin interior. These materials add secondary, tertiary, and other peaks to the fire as they burn. Smoke comes with the flames. The smoke is white at first and then a black acrid smoke begins to build up, stinging the eyes and decreasing visibility. The fire draws air in like a furnace as it continues to burn, igniting still more objects and burning hotter. Then, a sudden burst of flames or *flashover* occurs. These flames ignite all the gases collected inside the cabin and uses up all available O_2 causing the fire to roar through the cabin at speeds up to 68 fps.

The flashover is caused by the collection of gases at the roof of the cabin reaching their spontaneous ignition temperature. The flames spread rapidly and can bounce to other combustible materials, producing a rapid and widespread extension of the fire; in other words, the fire envelops everything. Some researchers believe there are as few as two minutes before flashover occurs, inhibiting survival. Others say the time is far less.

Other post-crash hazards

Aircraft breakup and fire are not the only major problems in an aircraft crash. Other dangers in a crash relate to post-crash fires. They include:

- Smoke.
- Spreading flames.
- Toxic fumes from combustible products.
- Asphyxiation due to the rapid depletion of available O_2.
- Superheated air or gases (beyond maximum survivable temperatures).

Asphyxiation, a complete lack of O_2, causes death within a few minutes. With less than normal O_2 concentrations, there is a loss of muscle control, followed by a gradual loss of consciousness. This low level of O_2 also affects the brain causing faulty judgment, thus impairing the ability to escape.

Superheated air has been cited as the principal cause of fire-related fatalities. The heated gases cause heat, chemical, and anoxic damage as they enter the respiratory system. The damage includes mental and physical disturbances occurring as a result of hypoxia. Each of these, alone or in combination, occurs shortly after exposure to the fire and later smoke and fumes. Some investigators believe that up to 80 percent of the passengers who die by fire succumb first to smoke and gases from burning cabin materials, rather than burning instantly.

The effects of all these factors combined far outweighs any of the five individual factors. How much time is available to escape depends on such things as aircraft size. For example, two or more minutes might be available in a large commercial aircraft before being overwhelmed by high temperatures, depleted O_2, and lethal concentrations of toxic smoke and fumes. While the aircrew and passengers of a smaller aircraft may succumb in a matter of seconds.

Smoke

Everyone recognizes the hazards of smoke and fumes, especially in confined areas such as an aircraft cabin. Where there is fire there is smoke and fumes. Once they enter the cabin, flames feed on anything that burns. The smoke becomes so thick a hand is not visible in front of the face. Smoke can obscure exits and aisles or even items blocking the exits. It also causes tearing of the eyes from the particles in the air.

Toxic fumes

Combined with smoke, toxic fumes are the most dangerous byproducts of fire. Aircraft fire fumes can contain toxic gases such as *sulfur dioxide, hydrogen sulfide, hydrogen cyanide, hydrogen fluoride,*

hydrogen chloride acrolein, *carbon monoxide*, and *carbon dioxide*. These gases come from the burning of the materials used to make the cabin interiors. The resulting fumes from these smoldering or burning materials can be lethal. The table below contains some of the most commonly used materials in both commercial and military aircraft. It shows several toxic gases produced by such materials:

Material	Carbon Monoxide	Hydrogen Chloride	Cyanide	Other
Nylon	✓			
Wool	✓		✓	
Polyvinyl Chloride (PVC)	✓	✓		
Polyvinyl Flouride (PVF)	✓			Hydrogen Flouride
Urethane	✓		✓	
Urethane (flame retardant)	✓	✓	✓	
Acrylonitrile/butadine/styrene (ABS)	✓		✓	
Polysulfone	✓			Sulfur Dioxide
Rubber	✓			Sulfur Dioxide
Propylene	✓			
Polycarbonate	✓			

A typical 300-seat jet contains about 1,800 to 2,000 pounds of urethane foam. The burning foam gives off *hydrogen cyanide*. Hydrogen cyanide causes increased breathing, which, in turn, causes the rapid inhalation of any other harmful gases present. This gas is 20 times more toxic than carbon monoxide and prevents body tissue from using O_2, thus decreasing the survival rate.

Many aircraft contain a lot of plastic. Burning plastic gives off a very dense, sooty, thick black smoke, and it creates *hydrogen sulfide*. This gas smells like rotten eggs. It causes headache, nausea, confusion, and weakness leading to unconsciousness. Death may come soon after from breathing other gases. Plastic also gives off *hydrogen fluoride* and *hydrogen chloride*. The former is so strong that it can etch glass when combined with water; it is not good for the eyes either. The latter forms *hydrochloric acid* when combined with water (eye tears) and moist bronchial membranes, causing cloudy vision and obstructive damage to the lungs.

Sulfur dioxide is another membrane-irritating gas; it comes from burning natural and synthetic rubber. This gas is pungent, heavy, and extremely toxic to humans. Sulfur dioxide forms sulfuric acid when it contacts moisture, causing extreme irritation of the eyes and the lungs' mucous membrane. Wood creates a gas called *acrolein*. It has a tear-producing effect, which can allow other gases to injure the eyes and lungs.

Carbon monoxide and *carbon dioxide* are other gases associated with any fire. Carbon monoxide (CO) has an insidious effect and is the more lethal of the two. It impairs O_2 transport and uptake, thus affecting judgment and physiomotor control. High doses of CO can cause death. CO_2 is not toxic, but it does stimulate respiration when inhaled. Increased respiration increases the intake of other more toxic gases.

There are other substances to consider in military aircraft. Military aircraft routinely transport various supplies such as O_2 bottles, nitrogen (N_2), CO_2 tanks, liquid oxygen containers, or other non-hazardous cargo along with passengers. All these items may burn when they come in contact with an ignition source; therefore, it is important to be aware of these potential hazards.

What to do when the aircraft stops

Do not wait for the aircrew or flight attendants to give instructions once the aircraft comes to a stop. Recall the aircraft emergency procedures for the situation and take action. After the impact, the

occupants may be upright, on their side, upside down, or in any other awkward position. Storage lockers, carry-on baggage, and broken seats may be scattered throughout the cabin. The first thing to do is stay calm! Check the cabin area. Activate the lap belt release if it is still secured. It is a good idea to practice releasing the lap belt before takeoff, particularly if you are using a new type of restraint for the first time. Untangle yourself and move toward the nearest exit. Do not stand up if there is smoke, rather get low and stay low. Try not to breathe the fumes; they could impair your ability of getting to the exit. If the resulting opening from broken or torn fuselage is nearer than the planned exit, you may use it. Every second is vital to survival. Decreasing the time inside the broken aircraft improves chances of survival.

Using emergency exits

Exiting the aircraft may not be as simple as the safety instruction card or TO makes it look. Knowing where the exits are is only half the battle; knowing how to open the exit and use the emergency escape device is also critical. Primarily aircrew members and passengers rely on one another and are relied upon during a crash to successfully evacuate the aircraft. Both may be required to open an exit, deploy an escape slide, don a life vest, or use an O_2 mask during an emergency. Study the safety instruction card and learn how to use all exits and resources. The Manchester accident is a good example of exits causing a problem; a problem that possibly added to the passenger death total.

Knowing how to evacuate an aircraft during an emergency contributes to everyone’s safety, both the aircrew and passengers. The emergency or safety instruction card provides detailed information on what to do in the event of an emergency landing. Be sure to read the card, look over the exits, and mentally review how they work. Ask the loadmaster or crew chief how the exits actually work.

Exit doors are heavy and bulky, so push hard to open them. The escape slide is pre-flighted just before leaving the gate and is activated when the door is opened. Look for a handle or lanyard to inflate the slide if it does not inflate automatically. Jump into the slide, versus sitting on the edge and pushing off, to save time and lives.

There are usually alternate ways of exiting an aircraft besides the standard emergency. Civilian aircraft have standard over-the-wing exits and/or tail stairs (fig. 2–32). The wing window exits normally open inward. The small but bulky exit must be manhandled. Try to stow it in the row fore or aft of the exit row so it does not fall into the aisle and block someone else’s escape. Step over and through the over-the-wing exit to get onto the wing. If a path of arrows leading downward is visible, follow it. Slide down the flaps if they are down. Find an undamaged flap portion nearest the ground and drop to safety if it is not down or the wing is damaged. Be careful of the height, especially if the landing gear is extended. There could be a drop of 8 to 10 feet to reach the ground, so use caution. If time permits, help others exit the aircraft so they do not get hurt. Again, read the emergency card, ask questions, and as soon as possible, look at the exit or exits and determine the best escape plan.

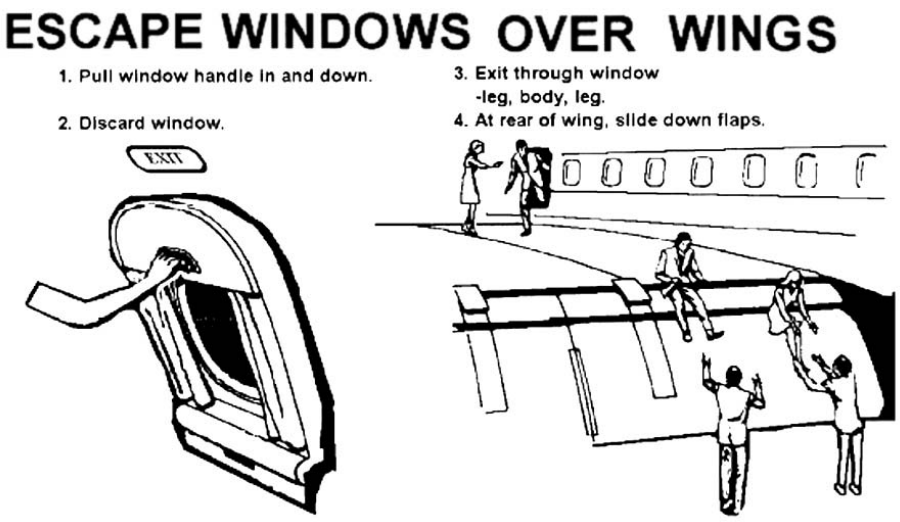

Figure 2–32. Over-the-wing exits.

Look for another way out if the *exit is blocked* by debris. The passengers will have to move it before they could evacuate. Listen for the aircrew's commands if confused, disoriented, or unable to see another exit. If there is a gaping hole in the fuselage, use it. Do not push through the line at an exit if it is moving slowly; just try to find another exit.

Check outside the aircraft before opening exits and do not open exits if there is a fire outside. The fire could race inside, deplete O_2, and send temperatures soaring. The cabin wall itself is the first line of defense when a fire is sweeping up alongside the aircraft. However, it does not offer a lot of protection. The plastic windows melt in seconds when exposed to direct flame. The thin aluminum aircraft skin can also melt when exposed to fire. Fire can enter the cabin within 10 to 40 seconds, depending on the thickness of the aircraft skin. The fire feeds on plastic storage bins, seats, and anything else that will burn once flames penetrate the cabin. Move as quickly as possible, at least 500 yards away and upwind from the aircraft, once outside the aircraft. Put a safe distance between you and any fire, potential fire, or explosion.

Assisting passengers and crew

The first concern of duty passengers or paying customers is personal safety. Everyone must also be aware of others' safety. Passengers with physical handicaps or limitations (broken arm and/or leg, blind, traveling with a baby, etc.) need help egressing. If there are international personnel on the aircraft they might have difficulty understanding evacuation procedures so it is important to assist them if at all possible. Passengers should know the number of seat rows, fore and aft, to the nearest exit. Most importantly, read the emergency instruction card and plan an escape route.

The aircrew has more responsibility than a general passenger. The aircrew must know the number of people on board the aircraft and who needs help egressing. The aircrew must know how to deal with panic, fear, and confusion that could result before or after the crash.

The early entry of smoke and flames into the cabin in the Manchester incident caused panic. Some of the passengers collapsed, others simply scrambled. The aisles and exits became blocked with passengers trying to get out. Two of the escape exits did not operate properly. Most of the survivors of this accident stated the delay in exiting was due to the crush of passengers. Aircrew hands are full when panic and confusion are combined with smoke and fumes.

People tend to regress when it comes to surviving a crash. Often, they do not remember the safety briefing before takeoff or the instructions on the safety card. Many passengers would want to exit through the same door they entered. Post-crash accident investigations have discovered people piled

up at the exits. Speculation is that the passengers either regressed or followed the crowd. They then succumbed to the smoke and fumes before reaching another exit.

People also look for guidance or someone to take charge of the situation. The flight engineers, loadmasters, and/or flight attendants are trained to take charge in an emergency situation. However, people will follow any person that demonstrates authority. Yet, disorientation, smoke, shock, and injury can cause people to do the first thing they think of: *follow the crowd*. They may think that since everyone else is heading in one direction they also should go the same way.

Crew members have positions of authority and should instill confidence in their actions and directions. Passengers who know what to do are a resource for an aircrew; they can help direct people to the nearest exit and to safety. People die in most survivable accidents because they lack mental preparation to do what is necessary to save lives.

Water landings

Aircraft, military or civilian, seldom make emergency water landings. However, aircrafts are equipped for such an event. Seat cushions serve as flotation devices and emergency escape slides detach from the aircraft and function as life rafts. Some commercial aircraft even have additional life rafts on board. Additional elements must be considered during water landings. High-winged aircraft tend to sink quickly. Low-winged aircraft (wings empty of fuel) may stay afloat longer, giving additional time to exit safely.

Once again, follow the aircrew's directions if the aircraft must ditch. Remember to remove shoes so the raft is not punctured. Put the life preserver on, but do not activate the lanyards until told to do so. An inflated life jacket takes up space, making it difficult for others to move around. Move to the opened exit. Cargo and baggage may make the aircraft lower at the rear, putting the rear exit at or below the water line. Do not open the door if this is the case.

Special features on military aircraft

Much of the preceding discussion can be applied to both civilian and military aircraft. However, by their very nature, military aircraft serve different purposes and have features that may not be found on civilian aircraft. AP technicians must become familiar with the special features of any military aircraft they fly or travel in. Escape devices and protective breathing equipment are two important features.

Escape devices

The escape rope, escape reel (fig. 2–33), and rope ladder are distinctive features on military aircraft. Each device helps egress the aircraft, especially from locations high in the airframe. Fully extend the rope before use. If it is not extended, the excess rope comes loose when weight is put on it and the user may quickly fall to the ground. Climbing down the rope versus sliding down it decreases the chance of rope burn. The escape reel, also found at the hinged windows, allows a slow descent to the ground.

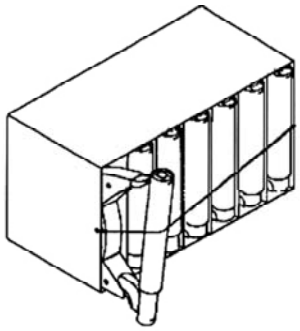

ESCAPE DESCENT REEL STOWAGE (TYPICAL)

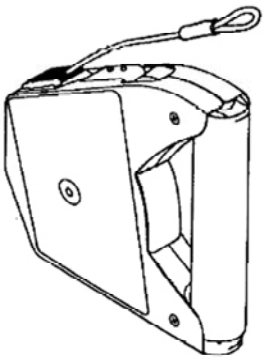

Figure 2–33. Escape reel.

Fully extend the rope ladder, just like the escape rope, before use. Some military aircraft also have escape slides, which work exactly like those found on commercial aircraft. The large gaping hole in the fuselage is one last escape route not to be overlooked. Most aircraft break up when they impact the ground, and that large opening could be one that saves lives.

Protective breathing equipment

Military aircraft have emergency oxygen systems for both aircrew and passengers. Two of the systems found in cargo type aircraft are the emergency passenger oxygen system (EPOS) and the protective breathing equipment (PBE). These devices protect you from inhaling smoke and fumes that may incapacitate you during an in-flight fire or evacuation after a crash. Refer to the oxygen section in Volume 3 for more information about these systems. Use the oxygen systems available or even cover your nose and mouth with damp cloth to avoid inhaling smoke and toxic fumes.

Self-Test Questions

After you complete these questions, you may check your answers at the end of the unit.

616. Preflight precautions

1. What are the hazards people can face during an aircraft crash?

2. What should you do if seated near an exit?

3. What two types of fibers are our clothes usually made of?

4. What makes the difference on how clothing materials burn?

5. Why is wool the best type of fiber to wear?

6. What is the danger of wearing a combination of polyester and nylon?

7. What type fibers have a much lower ignition point?

8. Why should you wear loose fitting clothing versus tight?

9. What are the two hazards with wearing high heels?

10. Describe the proper way to wear flight clothing.

11. How does *Nomex* help the wearer in the event of a fire?

12. Where is the best seat for surviving the initial impact of a crash?

617. Crash forces and body positions

1. What are the initial forces that must be dealt with when the aircraft hits the ground and comes to a stop?

2. According to research, how many G forces can the human body survive without injury?

3. What kind of forward impact a properly restrained individual can theoretically survive?

4. An airline seat could fail at what force in a vertical impact?

5. What percentage of the passenger injuries during a crash are caused by seat failure?

6. Define secondary impact.

7. What is the proper brace position for a passenger facing forward?

8. What is the proper brace position for a passenger facing towards the rear of the aircraft?

618. Post-crash environment and egress procedures

1. What is the most frequent cause of aircraft accidents?

2. Why are the first and last five minutes of flight the most critical time of any flight?

3. List four other causes of aircraft crashes besides the critical first and last five minutes?

4. What happens to anything unsecured in the event of a crash?

5. What are the problems with seats and stowed tray tables on an aircraft during a crash?

6. When there is an accident and fuel spills, what causes the spilled fuel to ignite?

7. What determines whether an aircraft will catch fire after crashing?

8. Why are commercial aircraft more susceptible to post-crash fire than military?

9. What comes with a post-crash fire that should be of great concern?

10. What is the percentage of injuries and deaths caused from superheated air?

11. What are the hazards of the pressure change created by an explosion following a crash?

12. What causes flashover?

13. What is the greatest danger with flashover?

14. List the hazards associated with post-crash fires.

15. What are the hazards of superheated air?

16. Up to what percentage of deaths are caused by smoke and gases from burning cabin materials?

17. Besides inhaling, what is another hazard of smoke?

18. Where do the gases produced in an aircraft fire come from?

19. What material within an aircraft produces hydrogen cyanide when burned?

20. What are the symptoms caused by the gases produced by burning plastic?

21. How does *sulfur dioxide* affects a person when it comes in contact with moisture?

22. Why is carbon monoxide more dangerous than carbon dioxide?

23. What are the actions you should take after the aircraft comes to a stop?

24. When is the escape slide usually activated in an emergency exit?

25. If using an over-the-wing exit, what are some options for safely getting to the ground?

26. What is the hazard of opening an exit with a fire outside the aircraft?

27. Depending on the thickness of the aircraft skin, within what time frame could fire enter the cabin from the outside?

28. What added responsibilities are put on aircrew members when escaping from an aircraft?

29. What is the tendency of passengers when trying to exit the aircraft after a crash?

30. What will people tend to do when there is no one to take charge and lead people out of a crash?

31. In water landings, what is the difference in high-winged versus low-winged aircraft?

32. Why should you wait to activate life preserver units after a crash landing in the water?

33. Why should you fully extend the escape rope before using it?

34. Why is supplemental oxygen system provided in most military aircrafts?

Answers to Self-Test Questions

606

1. Back-style parachute.
2. Canopy, pack, and harness.
3. 1,500 lbs.
4. A 7-inch loop.
5. Canopy, pilot chute and suspension lines.
6. Quarter-deployment bag.
7. Scot and FXC Model 11000.

8. Scot Release.
9. 14,000 ft +/– 500 ft.
10. AFP 64–15.
11. 10 matches, 3 fire starters, 2 striker strips, 1 pocket knife, 2 safety pins, 2 needles, 1 compass, 3 fish hooks, and 1 water bag.

607

1. Proper fitting of the harness.
2. Have crewmember slip harness over shoulders and assume forward leaning stance; adjust sling webbing evenly on each side until snug; attach and tighten leg straps; attach and tighten chest strap.
3. PCU–15/P and PCU–16/P harness assemblies.
4. To allow the users to jettison the canopy once they have reached the ground or water.
5. 10,000 lbs.
6. Operate the right release with your right hand and the left release with your left hand.
7. Insert a finger under the locking lever of the release body assembly and raise the lever with an upward motion, grasp the actuating lever with the finger tip and pull downward.
8. 45 degrees.
9. Of a unit with two sensing contacts on each parachute riser.
10. 150 ft long tubular nylon with 2,300 lbs breaking strength.
11. 2–3 fps and should not exceed 10 fps.

608

1. Preflight, routine and complete.
2. By each crew member who uses a personnel parachute and/or life support personnel.
3. Unpacking the assemblies.

609

1. To prevent the body from exceeding human G load tolerances.
2. Upward ejection is not possible due to airframe structure.
3. High speed (above 250 knots) low altitude (0 – 15,000 feet)) ejection. A drogue chute deploys first to slow seat, then parachute deployment.
4. Restraint emergency release handle.
5. 35,000 feet and 370 KEAS.
6. Decelerates and stabilizes ejection seat during initial phase of ejection sequence.
7. Aeroconical canopy, withdrawal line, suspension line stowage tray, and forward and aft risers.
8. Water deflation pockets on alternate gores and suspension lines.

610

1. Pilot decision to eject comes after aircraft is below its optimum altitude.
2. Crew member receives fatal or incapacitating injuries.
3. Crew member receives minor, non-disabling injuries.
4. Climbing aircraft.
5. Perform the zoom maneuver.
6. (1) Transmit aircraft location and intent to eject (Mayday). Set beacon for continuous operation.
   (2) Stow all loose equipment.
   (3) Ensure the lap belt, shoulder harness, and survival kit straps are drawn up tight. (Note: ACES II system survival kit straps are only snug.)
   (4) Tighten helmet chin strap and O_2 mask.
   (5) Pull down and lock the visor assembly.

(6) Activate emergency O_2 (if at high altitude and not done automatically).
(7) Jettison the canopy and arm the seat.
(8) Fire the seat.

7. (1) Sit erect and well back in the seat.
   (2) Ensure the arms are well back and inside the armrests.
   (3) Keep the head hard against the headrest.
   (4) Put the chin on the chest.
   (5) Place the knees together (for side-pull ejection seat style).
   (6) Position your feet according to the aircraft's *Dash One*.
8. Get out of the seat and ensure the parachute's automatic opening device has been activated.

611

1. Aircraft commander.
2. Head first, out the rear or bottom of hatch, facing forward, bring knees to chest, arms wrapped around knees in a cannonball position.
3. Activating the automatic release arming knob.
4. To reduce the chances of becoming entangled with the parachute canopy and suspension lines.
5. It is relatively simple and requires little or no practice for it to be effective.
6. Where the hands are placed.
7. Possibility of spinning once the body reaches terminal velocity or body assumes a back-down, head-low position.
8. Hypoxia, cold temperatures, and excessive parachute opening forces.
9. To break or slow down a spin.
10. With both hands pulling down towards the legs.
11. Snatch, when the suspension lines are pulled tight.
12. Person's weight, altitude, and speed.

612

1. Check the condition of the canopy.
2. Place hands on rear risers, push forward, look up at the canopy.
3. Partial inversion; full inversion; blown panels, tears, or broken suspension lines; twisted risers; streamers.
4. Maximum of 4 lines.
5. (1) Front to rear - Four-line jettison lanyards on set of front risers. (2) Side to side - Risers crossed over head.
6. Pull risers apart, kick legs in the direction of the spin (bicycle the feet).
7. Streamer.
8. Uneven spilling of air from under the canopy; the increased speed at which a person can hit the ground.
9. Four-line jettison.
10. There is a malfunction, you are below 200 feet, it is dark and you cannot determine condition of canopy.
11. Suspension line numbers 1, 2, 27, and 28.
12. Turn with the wind.

613

1. It will interfere with the ability to judge distance, gives illusion of ground rush.
2. To avoid obstacles.
3. Eyes on the horizon, feet and knees together, balls of the feet pointed towards the ground, hands over releases.
4. Balls of the feet, side of one leg, thigh, hip, lateral muscles in the back.

5. Drive one knee into the other in the direction of the PLF.
6. Jettison the survival kit.
7. Visor down, feet and knees together, elbows and forearms together in front of chest. Chin tucked in toward chest. Thumbs along each side of the lower edge of the jawbone with palms over face. Fingers closed over nose and mouth, on outside of the visor.
8. Prepare to land.
9. Grab all four risers, push down on one set and lift up on the other. Turn on to back. Spread legs, keep head up, slide hands down risers to releases, and activate both releases.
10. Hold head and face out of the water, spread legs, and activate releases.

614

1. Attitude.
2. Psychological.
3. Anxiety and fear.
4. When an individual perceives something bad is about to happen.
5. (1) Perspiration of palms of hands, soles of feet, and armpits.
   (2) Dryness of mouth and throat and higher voice pitch.
   (3) Increased muscular tension and fatigue.
   (4) Feelings of butterflies in the stomach, faintness, and nausea.
   (5) Quickening f pulse and trebling.
   (6) Dilation of pupils.
6. (1) Take advantage of training opportunities.
   (2) Stay physically and mentally fit.
   (3) Know equipment and how to use it.
7. Any four of the following:
   (1) Develop confidence.
   (2) Be prepared.
   (3) Keep informed.
   (4) Keep busy.
   (5) Know how fellow aircrews react to fear.
   (6) Learn to live, work, plan, and help each other as a team.
   (7) Keep spiritually fit.
   (8) Cultivate good survival attitudes.
   (9) Cultivate mutual support.
   (10) Exercise leadership.
   (11) Practice discipline.
   (12) Lead by example.
8. (1) Survivors can move in order to live despite pain.
   (2) The effects of pain can be reduced.
9. (1) Concentrate on necessities.
   (2) Recognize it as a discomfort to be tolerated.
   (3) Understand its source and nature.
   (4) Develop confidence and self respect.
10. For about two weeks.
11. 1 to 2°.
12. Cold and heat, dehydration, hunger, and fear.

13. C-cleanliness, O-avoid overheating, L-wear loose and layered, D-keep clothing dry, E-examine clothing for defects and wear, and R-keep clothing repaired.
14. Anything that will protect a survivor from environmental hazards.
15. Temperature, wind, and precipitation.
16. Fuel, heat, and oxygen.
17. Kindling.
18. You can live longer without food than you can without water.

615

1. (1) Life raft, one person.
   (2) Compass, lensatic.
   (3) Signal flares.
   (4) Mirror MK–3.
   (5) First aid kit.
   (6) Signal kit, foliage penetrating personnel distress.
   (7) Radio.
2. (1) Signal devices, (2) life sustaining and protection items, and (3) escape and evasion items.
3. Beacon and distress light.
4. By pulling on the lanyard attached to the seat kit or seat pan.
5. Magnetic compass.
6. Luminous markings, bezel ring, and two luminous sight dots.
7. Beacon and radio sets.
8. 243.0 MHz.
9. Approximately 15 hours.
10. 243.0 and 282.8 MHz.
11. A GPS, text messaging capabilities, and five different frequencies.
12. Because the radio is a line-of-sight communication device.
13. Red cap with bumps, bumps around the flare, string and washer on the pull ring.
14. 18 seconds.
15. Day, 7 miles clear day; night, 30 miles from altitude.
16. Hand-held launcher, seven signal flares, and instruction card.
17. (1) Fit flare into launcher.
    (2) Hold arms length at 45° angle, into the wind, turn head away.
    (3) Pull trigger down and release.
18. Signal mirror.
19. (1) Signal for help, (2) locate other crew members, and (3) scare off dangerous animals.
20. High intensity visual distress signal for use during night rescue.

616

1. Impact shock, flying debris, aircraft breakup, fire, smoke, fumes, and explosion.
2. Read how the specific exit operates.
3. Natural and artificial.
4. Each burns at a different temperature.
5. Does not readily support combustion, burns more slowly, and is easier to extinguish than cotton.
6. Material becomes limp or shrinks if it is not in direct contact with a burning outer cover. As it contracts, the heat that it retains causes burn injuries.
7. Artificial.

8. Allows heat to transfer through the material and not the skin.
9. Sprain/break an ankle or puncture the escape slide.
10. Sleeves rolled down all of the way, collar up, zippers closed, gloves on, boots tightly laced, and jacket on or kept close.
11. Helps to give more time/protection to get out of a fire.
12. Rear of aircraft.

617

1. Rapid deceleration of forward movement, impact shock G-forces.
2. 25 Gs.
3. 150 MPH to a dead stop in .25 seconds.
4. 5 Gs or less.
5. 47 percent.
6. The rebound occurring when the head slams against the head rest.
7. Head on the knees, grasping ankles with hands.
8. Sit up with arms across chest or under buttocks.

618

1. Aircraft control surface problems.
2. Aircraft control surfaces undergo considerable changes during this time, more often than any other time.
3. Any four of the following:
   (1) Poor runway conditions from lack of maintenance at remote sites.
   (2) Landing gear not extending.
   (3) Landing gear malfunctions at touchdown.
   (4) Improperly fastened cargo (cargo shifts can throw the aircraft off balance).
   (5) Engine disintegration at takeoff causing a high-speed abort.
   (6) In-flight emergency: fire or smoke, loss of hydraulics, decompression, etc.
4. It continues to travel in the same direction and speed as the aircraft.
5. Seats are ripped from their tracks, tray tables drop down blocking pathway.
6. Engines scrapping the ground and breaking off.
7. Whether the fuel onboard is contained or spilled.
8. Commercial aircraft store fuel in wings and belly, making them more vulnerable to impact damage.
9. Superheated air.
10. 40 percent of all crash injuries and 20 percent of deaths.
11. Loss of consciousness, lung damage, eardrums burst.
12. Gases at the roof of the cabin reach their spontaneous ignition temperature.
13. Flames spread rapidly, can bounce to other combustible material, and produce a rapid and widespread extension of the fire.
14. (1) Smoke.
    (2) Spreading flames.
    (3) Toxic fumes from combustible products.
    (4) Asphyxiation due to the rapid depletion of available O_2.
    (5) Superheated air or gasses (beyond maximum survivable temperatures).
15. Causes heat, chemical, and anoxic damage to the respiratory system.
16. 80 percent.
17. Obscures exits, aisles, and items blocking the exit.
18. From the burning materials used to make the cabin interior.

19. Urethane foam.
20. Headache, nausea, confusion, and weakness leading to unconsciousness.
21. Causing extreme irritation in the eyes and lungs' membranes.
22. Carbon monoxide impairs oxygen transport and uptake, carbon dioxide is not toxic.
23. Stay calm, check cabin area, activate the lap belt release, and execute emergency procedures.
24. Automatically when the door is opened.
25. Follow arrows if able to, slide down the flaps if they are down.
26. Fire could race inside, deplete oxygen, and send temperatures soaring.
27. 10 to 40 seconds.
28. They must know how many people are on board and those who need assistance.
29. They would want to exit the same door they came in.
30. Follow the crowd.
31. High-winged aircraft sink faster than low-winged aircraft.
32. Takes up space in the cabin, making it difficult to get around.
33. The excess rope comes loose when weight is put on it and user may fall to the ground.
34. To combat toxic fumes.

Unit Review Exercises

Note to Student: Consider all choices carefully, select the *best* answer to each question, and *circle* the corresponding letter. When you have completed all unit review exercises, transfer your answers to ECI (AFIADL) Form 34, Field Scoring Answer Sheet.

Do not return your answer sheet to the Extension Course Program (A4L).

17. (606) What are the three *major* components of the back-style personnel parachute?
    a. Canopy, pack, and harness.
    b. Canopy, pack, and pilot chute.
    c. Canopy, pilot chute, and harness.
    d. Suspension lines, canopy, and pilot chute.

18. (606) The primary purpose of the automatic ripcord release being preset at a specific pressure altitude is to
    a. have a backup system to the manual release.
    b. avoid injury during opening shock at high altitude.
    c. ensure uniform opening of all parachutes upon ejection.
    d. ensure the cartridge pulls the ripcord when it is activated.

19. (606) The Scot model ripcord release is designed to deploy the parachute at a preset altitude of
    a. 10,000 $\pm$ 500 feet.
    b. 10,000 $\pm$ 1,000 feet.
    c. 14,000 $\pm$ 1,000 feet.
    d. 25,000 $\pm$ 500 feet.

20. (607) What are the three quick adjustment points in the Class IV parachute harness?
    a. Two for the legs and one for the chest.
    b. Two for the hips and one for the chest.
    c. One for the legs, one for the hips, and one for the chest.
    d. One for the legs, one for the back, and one for the chest.

21. (607) When is the UWARS designed to operate?
    a. 2.5 seconds after being submerged in any type of water.
    b. 2.0 seconds after being submerged in any type of water.
    c. 2.5 seconds after being submerged in sea water only.
    d. 2.0 seconds after being submerged in sea water only.

22. (607) How many feet per second is the *maximum* recommended descent rate for the PLD?
    a. 3.
    b. 5.
    c. 10.
    d. 15.

23. (608) The three types of parachute inspections are routine, complete, and
    a. annual.
    b. 180 day.
    c. preflight.
    d. post-flight.

24. (608) How often are routine parachute inspections conducted?
    a. Every 30 days.
    b. Every 60 days.
    c. Every 90 days.
    d. After each flight.

25. (609) Which *best* describes Mode 1 of the ACES II?
    a. Low speed (250 knots or less), low altitude (0 to 15,000 feet).
    b. Low speed (300 knots or less), low altitude (0 to 10,000 feet).
    c. High speed (250 knots or less), low altitude (0 to 15,000 feet).
    d. High speed (250 knots or less), high altitude (0 to 15,000 feet).

26. (609) Which mode of the ACES II is much like Mode 2 but is used for high altitude ejection?
    a. 1.
    b. 3.
    c. 4.
    d. 5.

27. (609) What type of ejection system is used in the US 16LA (T–6A) and US 16T (T–38) ejection seats?
    a. Rocket ejection system.
    b. Ballistic ejection system.
    c. Automatic ejection system.
    d. Crew module ejection system.

28. (609) What type of parachute is used for emergency egress in the US 16LA (T–6A) and US 16T (T–38) ejection seats?
    a. C–9 canopy.
    b. T–10 series parachute canopy.
    c. GQ–5000 aeroconical canopy.
    d. MC–6 personnel parachute canopy.

29. (610) The three factors that affect the success or failure of an ejection are aircraft
    a. altitude, attitude, and heading.
    b. airspeed, altitude, and attitude.
    c. airspeed, altitude, and temperature.
    d. altitude, attitude, and number on board.

30. (610) What is the benefit of maintaining a correct body position during an ejection sequence?
    a. Stabilizes the ejection seat.
    b. Ensures man-seat separation.
    c. Decreases the opening shock.
    d. Helps reduce the chance of injury.

31. (611) Where would you look to find emergency escape procedures for a particular aircraft?
    a. AFP 64–15.
    b. AFI 11–202.
    c. Aircraft dash one.
    d. Aircraft dash four.

32. (611) The proper way to escape through a side door of an aircraft is to leave from the
    a. rear edge of the door, use arms to push away, and jump as far up.
    b. rear edge of the door, use arms to push away, and jump as far out.
    c. front edge of the door, use arms to push away, and jump as far up.
    d. front edge of the door, use arms to push away, and jump as far out.

33. (611) The three hazards of opening a parachute at high altitudes are hypoxia
    a. disorientation and excessive opening forces.
    b. cold temperatures and excessive opening forces.
    c. cold temperatures and moderate opening forces.
    d. cold temperatures and decompression sickness.

34. (611) In non-ejection seat aircraft, when should you pull the ripcord on a parachute with an automatic device?
    a. Right after leaving the aircraft.
    b. Before reaching 200 feet AGL.
    c. After descending 200 feet MSL.
    d. Just prior to leaving the aircraft.

35. (611) Which device acts as an anchor for deploying the parachute?
    a. D-ring.
    b. Pilot chute.
    c. Suspension lines.
    d. Automatic opening device.

36. (611) What parachute opening force is produced by the inflation of the canopy?
    a. Pull force.
    b. Negative Gs.
    c. Snatch force.
    d. Opening shock.

37. (612) Your parachute has a full inversion if the
    a. canopy is in a figure eight.
    b. pilot chute can be seen inside the center of the canopy.
    c. pilot chute can be seen outside the center of the canopy.
    d. canopy is inflated but there are suspension lines over the top.

38. (612) What is the *primary* danger of oscillation in a parachute?
    a. Canopy collapsing.
    b. There is no danger.
    c. Increased speed hitting the ground.
    d. Poor body position when hitting the ground.

39. (612) What is the turning capacity, in degrees per second, of the parachute canopy with the four-line jettison activated?
    a. 25.
    b. 30.
    c. 35.
    d. 40.

40. (612) What kind of forward drift is produced when the four-line jettison is activated?
    a. 1 to 3 knots.
    b. 4 to 6 knots.
    c. 5 to 7 knots.
    d. 6 to 9 knots.

41. (613) Which *best* describes a proper body position for power line landing?
    a. Head turned to the side, palms flat against the front risers, feet and knees together.
    b. Head turned to the side, hands over visors, feet and knees together, toes pointed down.
    c. Eyes on the horizon, palms flat against the front risers, feet and knees together, toes pointed down.
    d. Head turned to the side, palms flat against the front risers, feet and knees together, toes pointed down.

42. (613) If landing over water, when should you inflate the life preserver unit?
    a. Before entering the water.
    b. After your feet touch the water.
    c. Before discarding the oxygen mask.
    d. After activating the four-line jettison.

43. (614) Which is *not* a psychological factor of a survival situation?
    a. Location.
    b. Insecurity.
    c. Frustration.
    d. Depression.

44. (614) Which symptom is *not* a psychological symptom of fear?
    a. Panic.
    b. Nausea.
    c. Forgetfulness.
    d. Irritability, increased hostility.

45. (614) Which factor is *not* an important factor in controlling fear?
    a. Ignore fear.
    b. Understand fear.
    c. Admit fear exists.
    d. Accept fear as a reality.

46. (614) How long can a person typically survive without water?
    a. 24 hours.
    b. 48 hours.
    c. 72 hours.
    d. 1 to 2 weeks.

47. (614) What are the three groups of fuels used for a fire?
    a. Heat, fuel, and kindling.
    b. Oxygen, wood, and heat.
    c. Tinder, kindling, and fuel.
    d. Tinder, kindling, and wood.

48. (615) What is the *most* important use for a magnetic compass in a survival situation?
    a. Vectoring.
    b. Traveling.
    c. Night navigation.
    d. Measuring direction.

49. (615) What is the operating range, in nautical miles, of the PRC–90 survival radio, for an aircraft flying at 10,000 feet?
    a. 50.
    b. 55.
    c. 60.
    d. 65.

50. (615) Which describes the day end of a MK–13, distress signal?
    a. Red smooth plastic cap, bumps around the flare.
    b. Orange smooth plastic cap, smooth around the flare.
    c. Red plastic cap with bumps, bumps around the flare.
    d. Orange plastic cap with bumps, string and washer on pull ring.

51. (615) What is the *maximum* altitude and burn time for the personal distress kit flare?
    a. 1,200 feet, 9 seconds.
    b. 1,250 feet, 9 seconds.
    c. 1,200 feet, 15 seconds.
    d. 1,200 feet, 15 seconds.

52. (616) What should you do prior to take-off to increase your chances of surviving an aircraft crash in which you may need to exit a smoke-filled cabin?
    a. Count the rows of seats to the main exit.
    b. Count all the rows of seats from your seat.
    c. Count the rows of seats fore and aft to exits.
    d. Count the rows of seats to the nearest wing exits.

53. (616) Which natural fiber is the *best* to wear in the event of an aircraft fire?
    a. Wool.
    b. Nylon.
    c. Cotton.
    d. Polyester.

54. (616) What is one of the *best* seat locations for egressing the aircraft once it stops?
    a. Rear of the aircraft.
    b. Near or over the wing.
    c. Next to the main entrance.
    d. Near the front of the aircraft.

55. (617) How can you *minimize* the effect of the primary and secondary impact of an aircraft crash?
    a. Dress properly.
    b. Seat assignment.
    c. Proper body position.
    d. Minimize overhead baggage.

56. (617) What is the correct brace position if a passenger is facing towards the rear of the aircraft?
    a. Head on knees, grasp ankles, hands facing backwards.
    b. Head on knees, grasp ankles, hands facing forward.
    c. Sit up, hands under buttocks.
    d. Sit up, hands over knees.

57. (618) The *most* critical times of any aircraft flight is during the first and last
    a. 3 minutes.
    b. 5 minutes.
    c. 10 minutes.
    d. 15 minutes.

58. (618) Post-crash hazards include all *except*
    a. fire.
    b. explosions.
    c. toxic fumes.
    d. flying debris.

59. (618) When combined, what are the two most dangerous byproducts associated with a post-crash fire?
    a. Smoke and toxic fumes.
    b. Toxic fumes and superheated air.
    c. Smoke and extreme temperatures.
    d. Superheated air and extreme temperatures.

60. (618) Which is *not* important regarding aircraft exits?
    a. Know where they are.
    b. Know how to open them.
    c. Select one to use in the event of a crash.
    d. Know how to use the emergency escape device.

When you complete this course, please complete the student survey on the Internet at this URL: http://www.auecampussupport.com. Click on Student Info and choose CDC Student Satisfaction Feedback.

Student Notes

Glossary of Abbreviations and Acronyms

ABS	acrylonitrile/butadine/styrene
ACES	advanced concept ejection seat
ADF	automatic direction finder
AF	Air Force
AFI	Air Force instruction
AFP	Air Force pamphlet
AFR	Air Force regulation
AFSOC	Air Force Special Operations Command
AFTTP	Air Force tactics, techniques, and procedures
AGL	above ground level
AGSM	anti-G straining maneuver
AP	aerospace physiology
CDC	career development course
CO	carbon monoxide
CO_2	carbon dioxide
DCS	decompression sickness
DME	direction measuring equipment
ECS	environmental control system
EPOS	emergency passenger oxygen system
FAA	Federal Aviation Administration
FL	flight level
fpm	feet per minute
fps	feet per second
G	gravitational forces
GI	gastrointestinal
GL	ground level
GPS	global positioning system
HAAMS	high altitude airdrop mission support
HARMS	high altitude reconnaissance mission support
IAW	in accordance with
ID	identification
KEAS	knots equivalent airspeed
KIAS	knots indicated airspeed
lbs	pounds

LED	light-emitting diodes
LOS	line of sight
LPU	life preserver unit
MAJCOM	major command
MHz	megahertz
mm Hg	millimeters of mercury
MPH	miles per hour
MSL	mean sea level
N_2	nitrogen
NASA	National Aeronautics and Space Administration
NTSB	National Transportation and Safety Board
NVG	night vision goggles
O_2	oxygen
OBOGS	on board oxygen generating system
PBE	protective breathing equipment
PIRD	powered inertia retraction device
PLD	parachute lowering device
PLF	parachute landing fall
POK	passenger oxygen kit
psia	pounds per squared inch absolute
psi	pounds per squared inch
PSPTS	Physiological Support Squadron
PVC	Polyvinyl Chloride
PVF	Polyvinyl Flouride
RD	rapid decompression
SL	sea level
SSK	seat survival kit
TDY	temporary duty
TO	technical order
TUC	time of useful consciousness
USAF	Unite States Air Force
UWARS	universal water activated release system

Student Notes

AFSC 4M051
4M051N 04 0906
Edit Code 03