# CDC 2M052

# Missile and Space Systems Maintenance Journeyman

## Volume 1. Missile and Space Systems Maintenance Orientation

**Air Force Career Development Academy**

**Air University**

**Air Education and Training Command**

**2M052 01 1906, Edit Code 06**

**AFSC 2M052**

**Author:** MSgt Carlos G. Laurencio
532nd Training Squadron
381st Training Group (AETC)
532 TRS/DOMC
597 7th Street, Suite 105
Vandenberg Air Force Base, California 93437–5305
DSN: 276–6627
E-mail address: Carlos.Laurencio@US.AF.Mil

**Instructional Systems Specialist:** Todd Knowles

**Editor:** Catherine Parker

Air Force Career Development Academy (AFCDA)
Air University (AETC)
Maxwell AFB Gunter Annex, Alabama

Material in this volume is reviewed annually for technical accuracy, adequacy, and currency. For Weighted Airman Promotion System (WAPS) Specialty Knowledge Test (SKT) purposes, the examinee should check the *Enlisted Promotions References and Requirements Catalog* to determine the correct references to study.

THE CAREER DEVELOPMENT COURSE (CDC) you are about to begin will help you obtain knowledge required for upgrade and promotion. This is a self-study course that the Air Force intends for you to complete during your off-duty time. Satisfactory completion of this course satisfies the knowledge portion of the Air Force dual-channel, enlisted specialty training program and is a prerequisite for upgrading to the 5-skill level.

This course contains three volumes. The Air Force requires you to know the material contained within these volumes even though you may not use all the information to perform your present job.

Volume one contains basic information on the Minuteman III intercontinental ballistic missile (ICBM) weapon system, along with maintenance management and career progression. Volume two introduces you to the hardness assurance procedures on an ICBM, educates you on the different types of Air Force publications to include the technical order system, provides maintenance fundamentals, and describes proper material management. Volume three covers hydraulic and pneumatic principles used in the ICBM special-purpose maintenance vehicles and support equipment to the function and operation of specific vehicles and pieces of equipment.

Volume one serves to introduce you to the weapon system you will be maintaining. The goal of this volume is to provide you with a basic understanding of the weapon system along with the organization and mission of maintenance units. This volume is divided into four units.

Unit one provides an introduction into the career field, detailing some of the duty positions you may perform. Further information is provided to show you how to progress in the career field as well as some education you can expect along the way.

Unit two describes the mission and strategic characteristics of the Minuteman III weapon system, how it is deployed and controlled, as well as the many functions and features of the MSB, the MAF, and the LF.

Unit three introduces you to the functions and responsibilities within maintenance organizations using a top down approach from Air Force Global Strike Command (AFGSC), 20th Air Force, wings, and groups, as well as the maintenance squadrons and civilian contractors.

Unit four lists the roles and responsibilities within the Spacelift mission, along with providing an overview of the mission itself. Further, it describes launch and satellite vehicle characteristics. Additionally, it discusses the mission of the research and development organizations, and describes missile test programs.

A glossary is included for your use.

Code numbers on figures are for preparing agency identification only.

The use of a name of any specific manufacturer, commercial product, commodity, or service in this publication does not imply endorsement by the Air Force.

To get a response to your questions concerning subject matter in this course, or to point out technical errors in the text, unit review exercises, or course examination, call or write the author using the contact information provided in this volume.

**NOTE:** Do not use Air Force Instruction (AFI) 38–402, *Airmen Powered by Innovation and Suggestion Program,* to submit corrections for printing or typographical errors. For Air National Guard (ANG) members, do not use Air National Guard Instruction (ANGI) 38–401, *Suggestion Program.*

If you have questions that your supervisor, training manager, or education/training office cannot answer regarding course enrollment, course material, or administrative issues, please contact Air University Educational Support Services at http://www.aueducationsupport.com. Be sure your request includes your name, the last four digits of your social security number, address, and course/volume number.

For Guard and Reserve personnel, this volume is valued at 12 hours and 3 points.

**NOTE:**

In this volume, the subject matter is divided into self-contained units. A unit menu begins each unit, identifying the lesson headings and numbers. After reading the unit menu page and unit introduction, study the section, answer the self-test questions, and compare your answers with those given at the end of the unit. Then complete the unit review exercises.

*Page*

**Unit 1. Missile and Space Systems Maintenance Career Field ..... 1–1**

**Unit 2. Intercontinental Ballistic Missile Weapon System ..... 2–1**

2–1. Weapon System Characteristics ..... 2–1

2–2. Intercontential Ballistic Missile Facilities ..... 2–16

**Unit 3. Maintenance Management ..... 3–1**

3–1. Missile maintenance organizational structure ..... 3–1

3–2. General and specific responsibilities ..... 3–18

**Unit 4. Spacelift, Research & Development, and Missile Tests ..... 4–1**

4–1. Spacelift Mission ..... 4–1

4–2. Launch Vehicles and Spacecraft ..... 4–7

4–3. Research and Development ..... 4–12

4–4. Missile System Tests ..... 4–15

*Glossary ..... G–1*

**Please read the menu for Unit 1 and begin. ➔**

# Unit 1. Missile and Space Systems Maintenance Career Field

001. Description of the 2M0 career field ..... 1–1
002. Training documentation and career development course ..... 1–3
003. 2M0X2 career ladder progression ..... 1–5
004. Duties of Air Force specialty code 2M0X2 ..... 1–9

WELCOME TO THE Missile and Space Systems Maintenance career field. You have earned the right to be called an "X2" and have joined an elite group of missile maintenance professionals. You started your 2M0X2 career by completing technical training and earning the coveted maintenance badge; that was just the beginning. Completing this career development course (CDC) is one of many training requirements you will need to complete throughout your X2 career. Your success will depend on how well you grasp and apply this information. Your new roles and responsibilities will be a key component to the success of your organization.

You probably have many questions regarding your role in the United States Air Force (USAF) as well as concerns about what others in the 2M0 community expect from you. As you study this short unit, we will address these subjects and others that pertain to our mission. We'll discuss your career field structure, job description, and what is expected of you in order to progress in knowledge, skill, ability, and rank. Remember, with increased rank comes additional responsibilities.

To be successful, the Air Force adapts your talents and abilities to fulfill its mission. It did this through a process of matching your talents and abilities to a job position through the classification system. The Airman classification system uses specialty descriptions and codes to identify different types of jobs performed within the Air Force and the basic qualifications of Airmen to do these jobs, which includes your job as a 2M0. Now, let's take a deeper dive into what the 2M0 job entails.

## 001. Description of the 2M0 career field

Before we can discuss the Air Force specialty code (AFSC), we must first understand the classification structure. The objective of the military classification system is to identify duties and tasks for every position needed to accomplish the Air Force mission. The system is designed to identify qualifications and abilities necessary to accomplish these duties and tasks, as well as provide clear and visible career progression patterns. It links duties and tasks into cohesive job clusters used to match personnel requirements with personal aptitudes, attributes, and qualifications. The classification system also provides concise award, upgrade, and retention criteria for career progression. Air Force policy is to retain Airmen who demonstrate the ability to successfully complete training and whose past record clearly justifies further investment. The following explains the Air Force classification system by looking at our AFSC, and is based on information found in Air Force instruction (AFI) 36–2101, *Classifying Military Personnel (Officer and Enlisted)*.

### Air Force specialty code

Every Airman in the USAF receives a job identified by an AFSC. With a few exceptions, each code consists of a unique sequence of five letters and numbers. The composition of the code enables assignments personnel and supervisors to see at a glance an Airman's career field, specific duty within the career field, level of expertise, and approximate grade.

The Air Force specialty gives a detailed outline of what the majority of personnel in an AFSC do in the field. In addition, the specialty description is used as a general guide for the clarification of duty responsibilities and entry requirements. Officer AFSC makeup varies slightly from the components of an enlisted AFSC; however, in this lesson we will focus only on enlisted designators.

Now that you are aware of how the Air Force uses AFSCs to designate the different jobs available to people entering the Air Force and how each AFSC is classified using an alphanumeric designation system, let's look at an example of how your AFSC is broken down as illustrated in following table.

| Career Field breakdown. | | |
|---|---|---|
| **Line** | **Character** | **Identifies** |
| 2 | Career Group | Logistics |
| 2M | Career Field (Family) | Missile Maintenance |
| 2M0 | Career Field Subdivision | Zero Subdivision |
| 2M05 | Skill Level | Journeyman |
| 2M052 | Specific AFSC | Missile and Space Systems Maintenance Journeyman |

## Job description

Now that you have an understanding of how the 2M0 Air Force specialty code is established, you are going to learn how each of the Minuteman III intercontinental ballistic missile (ICBM) career fields support our nation's nuclear deterrence mission. The Missile and Space Systems Maintenance career field is one component of the ICBM mission. The ICBM career field is broken down into three specialties: Missile and Space Systems Electronic Maintenance (2M0X1), Missile and Space Systems Maintenance (2M0X2) and Missile and Space Facilities (2M0X3) that support the overall nuclear mission. Air Force specialty descriptions are published in the Air Force Enlisted Classification Directory (AFECD) and Air Force Officer Classification Directory (AFOCD) in numeric order, and describe the general duties and responsibilities of each specialty.

When most people are first hired by an organization, they ask: "What is my job?" and "Why am I here?" Sounds logical right? In any job, you have to know why you are there and what you are supposed to do because that is how you know how to navigate through your career. We in the military do not just have 9 to 5 jobs; instead, we are expected to be available 24 hours, 7 days a week, and 365 days a year, to fulfill our piece of the ICBM mission.

The AFECD is a guide that establishes the occupational structure of the entire enlisted force. It contains a complete duty description and responsibility of each specialty, but our focus is on the Missile and Space Systems Maintenance career field. The following is a description of the Missile and Space Systems Maintenance career field duties based upon the AFECD:

> The Missile and Space Systems Maintenance career field encompasses the skills, functions, and techniques used to acquire, activate, assemble, transport, install, and maintain missiles and subsystems; acquire, activate, and supervise assembly, transportation, maintenance, inspection, modification, and launch processing of Spacelift boosters, satellites, and subsystems; assemble, operate, fabricate, install, test, and troubleshoot specialized research and development systems and subsystems; acquire, activate, inspect, maintain, repair, calibrate, modify, and manage these actions on related missile, Spacelift booster, satellite, and research and development (R&D) facilities, support systems, test equipment, and subsystems.

## Roles within 2M0XX career fields

In the following paragraphs, you will learn what the Missile and Space Systems Maintenance career encompasses and how its specialties, having unique capabilities, support the ICBM's power as a strategic deterrent. The AFECD descriptions of the duties and responsibilities of other ICBM teams we work with will help you to understand their role in maintaining the Minuteman III weapon system.

### *Missile and Space Systems Electronic Maintenance (2M0X1A and 2M0X1B)*

The 2M0X1 career field is split up into two different areas and deserves a bit of an explanation. The United States has what is known as the nuclear triad. This triad consists of land-based ICBM, air-launch cruise missiles (ALCM), and submarine-launched ballistic missiles (SLBM). The Air Force operates two legs of the triad, which consist of the ICBM and the ALCM. Your career field is not concerned with the SLBMs since the Navy operates them. The suffix, or "shred" as it is commonly called, delineates one Air Force X1 specialty from the other; for example, 2M0X1A is used to designate personnel within the ICBM electro-mechanical team (EMT) and 2M0X1B designates the air-launched missile maintenance (ALMM) personnel. The A and B shred is only applicable to the 1- and 3-skill levels. Once a 2M0X1 achieves his or her 5-skill level, the shred is dropped from the AFSC; a 2M0X1 can be assigned to either an aircraft unit or an ICBM unit.

#### *2M0X1A*

EMT personnel work on the ICBM weapon system specializing in the troubleshooting, maintenance, and repair of electrical and electronic systems, components, and equipment. At a launch facility, EMT personnel perform maintenance on such things as the electronic racks, emergency storage batteries, security systems, the missile's guidance set, and Personnel Access Systems (PAS). At the missile alert facility, they do much of their work underground in the launch control center (LCC) where the two missile combat crew (MCC) officers sit on alert to monitor and interact with the rapid execution and targeting console (REACT). It is within the LCC that EMT personnel maintain the missile alert facility emergency storage batteries.

#### *2M0X1B*

Air-launch missile maintenance technicians work on the nuclear ALCM and the conventional ALCM weapon system. Most 2M0X1Bs are stationed at bases that support bomber aircraft-delivered nuclear and conventional missions. Like EMT, ALMM personnel troubleshoot, maintain, and repair electrical and electronic equipment and components; however, the scope of their work encompasses the entirety of the ALCM/conventional ALCM except for the warhead or conventional high explosive ALCM payload. Along with missile maintenance, ALMM also performs pneumatic and electrical system tests on the launchers and pylons that are attached to the bomber aircraft to support the delivery of the weapon system. At this point in your career, you will work mostly with EMT personnel since they also work on the ICBM weapon system.

### *Missile and Space Facilities (2M0X3)*

The facility maintenance team (FMT) maintains, operates, services, and repairs power generation and distribution systems, and environmental control and associated support systems and equipment for missile, Spacelift, and R&D facilities.

As you can see by the preceding Air Force specialty descriptions, Airmen assigned to the 2M0 career field are involved in more than just performing inspections on "tools" in the tool room. America's ICBMs are ready to launch at any given moment due to the critical role that all three specialties play working toward fulfilling the same mission.

Hopefully, by now you are starting to visualize and understand the bigger picture of the various roles of missile and space professionals and what part each plays in fulfilling the Air Force mission.

## 002. Training documentation and career development course

This lesson is intended to help you gain a better understanding of the CDC and the career field education and training plan (CFETP). The CFETP provides a solid roadmap for navigating through the life-cycle education and training requirements pivotal to career progression. If Airmen are not adequately trained in all AFSC tasks and duties, and if that training is not properly documented, the unit could fail in mission execution. The lessons in this section are designed to help you understand your responsibilities and ensure successful mission accomplishment. Let us begin with the CDC.

### Career development course

You are currently working on your CDC, so it is important to understand why you are studying it and how it is used. A CDC is a formal, written course that *provides* personnel with additional knowledge necessary to advance to the next higher skill level. A CDC does not teach task proficiency or all the knowledge related to a specific task. CDCs contain information based on broad principles and common knowledge requirements of their particular AFSC. Specific equipment or procedural knowledge is included only when this information is used throughout the career field or required to illustrate the application of a principle.

CDCs not only help you advance to the next skill level, they also help you advance through the ranks in the Air Force. When you are a senior Airman (SrA), you will be competing for promotion through the Weighted Airman Promotion System (WAPS). One of the written tests you will take is the specialty knowledge test (SKT) to determine your knowledge of the career field. This test is derived from all the information contained in your CDC. Senior noncommissioned officers (SNCO) in your career field who have broad career field experience develop these tests. When you are preparing to study, your unit WAPS monitor should provide you a clean set of CDC volumes for you to study. You will take an SKT to compete for promotion until you are promoted to the rank of master sergeant.

Progressing through the career field is an on-going process. You are prepared to perform skill level-related duties once you have attained the appropriate knowledge, skills, and qualifications.

### Career field education and training plan

The CFETP is a comprehensive core-training document that *provides* the framework and guidance necessary for planning, developing training requirements, locating training support resources, and identifying minimum core task requirements for your specialty. The plan documents a “training roadmap” for the career field. This roadmap is used to identify mandatory and optional skill level training personnel should receive during their careers in the Missile and Space Systems Maintenance specialty. Part I outlines everything from duties of the career field to when and where formal training occurs. Part II outlines all of the tasks in the career field, including all of the core tasks, as well as any other tasks that your career field can perform. The CFETP is used by commanders, supervisors, training managers, trainers, and technical training centers to plan, develop, manage, and conduct training programs. This plan does not address professional military education or track ancillary training.

The CFETP serves the following functions:

- Referenced as a management tool to plan, develop, manage, and conduct a career field training program.
- Ensures that established training is provided at the appropriate points within an Airman’s career.
- Identifies task and knowledge requirements for each skill level in the specialty and recommended training throughout each phase of an Airman’s career.
- Lists training courses available in the career field specialty, identifies sources of training, and provides the training references.
- Identifies training limitations impacting implementation of the desired career field-training program.

Parts I and II of the CFETP are explained in the following table:

| CFETP | | |
|---|---|---|
| **Section** | **Explanation** | |
| | **Part I** | **Part II** |
| A | Explains how everyone will use the plan. | Identifies the specialty training standard (STS) and includes duties, tasks, and technical references to support training, core tasks, and correspondence course requirements. |
| B | Identifies career progression information, duties, responsibilities, training decisions, career field path, and Community College of the Air Force (CCAF) degree requirements.<br>**NOTE:** Pursuing a degree is not mandatory for career progression. | Lists training objectives to be trained in the formal school. This is an important tool supervisors use to determine if Airmen satisfy training requirements. |
| C | Associates each skill level with specialty qualifications (knowledge, education, training, and other requirements) for entry, award, and retention of each skill level. | Identifies available support materials used to support proficiency training. |
| D | Indicates resource constraints like funds, manpower, equipment, and facilities. | Contains a training course index that lists courses mandatory to career progression and may also include optional courses to further a member's career path. |
| E | Transition training guide.<br>**NOTE:** This section is used only if two or more specialties are merging. | Is reserved for major command unique requirements. |

### *Core tasks*

In addition to the CDC, there will be core tasks that you must be certified on in order to advance to the next skill level. In the CFETP, these core tasks are identified by the applicable skill level number in the core task column (5 for 5-skill level, or 7 for 7-skill level). These tasks are tasks that your Air Force career field manager (AFCFM) has deemed are the minimum qualifications for everyone in the AFSC. These tasks can be hands-on maintenance tasks or administrative tasks. If you fail to complete your core tasks, you will not be upgraded to the next skill level.

### *Training documentation*

The Training Business Area (TBA) is used to document training electronically. It is an Air Force portal web-based application that fully automates the CFETP. The TBA allows you, the trainee, as well as your trainer, supervisor, workcenter supervisor, and unit training manager access to *certify* task and CDC completion. TBA provides users with global, real-time visibility into the technical qualifications, certifications, and training status of personnel. It allows users to view and update training qualifications from virtually anywhere and is easy to use, so extensive formal training is not needed. TBA is the standard tool to track and manage job position duty-based training. Ultimately, it is a program used to track qualifications over an individual's career.

## 003. 2M0X2 career ladder progression

In this lesson, you will learn what is required to obtain and progress through the apprentice, journeyman, craftsman, and superintendent skill levels. How quickly you progress through these skill levels is largely dependent on the effort you put forth to learn and perform your assigned duties. Holding the 2M0X2 AFSC exposes you to a wide range of duties and responsibilities. In general, the duties and responsibilities are the same; however, there are distinguishable differences as you progress from the 3-skill level to the 9-skill level.

To help clarify the lesson, refer to figure 1–1 and 1–2 for a visual illustration of the 2M0X2 career progression flow diagram and the enlisted professional military education model. These two diagrams outline distinct points when individuals should receive training in their career. They also indicate the specialty areas which can significantly improve an individual's career. Now, let us take a look at the basic overall duties and responsibilities of the Missile and Space Systems Maintenance AFSC and the skill level they pertain to.

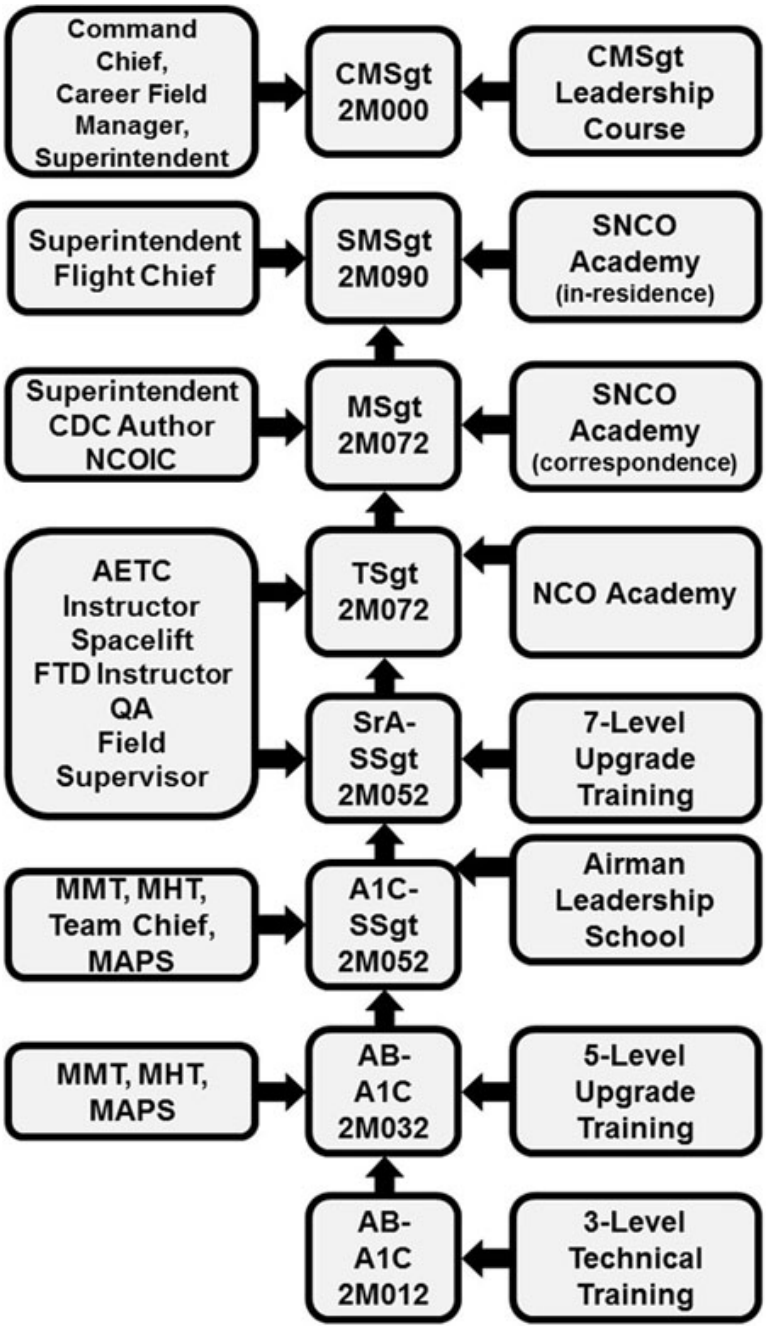


**Figure 1–1. 2M0X2 Career progression flow diagram.**

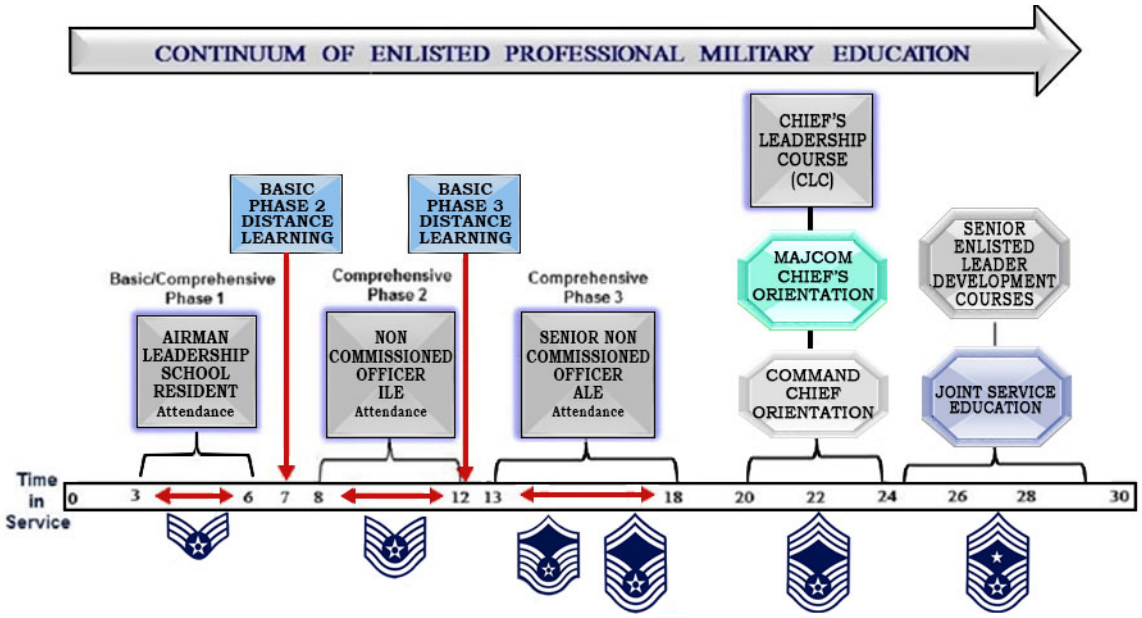


**Figure 1–2. 2M0X2 Enlisted professional military education model.**

## Helper (1-skill level)

The 1-skill level identifies personnel initially classified in a specialty when entering the Air Force or when retraining. After completing basic military training, you were awarded the 1-skill level and assigned to the Missile and Space Systems Maintenance career field as a "helper." For 2M0s, the code is 2M012.

## Apprentice (3-skill level)

Next, you began your initial skills training in the 3-skill level apprentice course. Initial skills training established the foundation required to continue in the career field. During this time, you were trained on the fundamentals of the weapon system and performed a limited amount of hands-on training. You were awarded your 3-skill level upon graduation. At the apprentice 3-skill level, you will implement work activities as directed and perform tasks unsupervised when certifying officials determine you to be qualified. For 2M0s, the code is 2M032.

## Journeyman (5-skill level)

Once you arrived at your first duty station, you were automatically entered into 5-skill level upgrade training. The next step in continuing upgrade training is your enrollment in this CDC. Following completion of this CDC, you will be assigned to team training or to an on-the-job training (OJT) instructor to receive hands-on training on the 5-skill level core tasks and other duty related tasks. The following are requirements in order to qualify for the 5-skill level:

- Be in possession of a 3-skill level in the Air Force specialty.
- Successfully complete this 5-skill level CDC.
- Be certified on all 5-skill level core tasks.
- Be in *upgrade* training for a *minimum* of 12 months.

The 12-month period has been determined to be the amount of time necessary to develop the knowledge and skills to be a 5-skill level technician. There is *one exception* to this rule: Airman in *retraining* status will complete a *minimum* of nine months in upgrade training. When you meet all these requirements, the *final* step is to be recommended by your supervisor and *approved* by your commander.

As a journeyman, you will continue to progress by completing formal and informal training to broaden your technical and managerial skills. You may be assigned duty positions *such as* team chief, instructor, shift leader, evaluator, or maintenance controller. For 2M0s, the code is 2M052. The following list provides just some of the responsibilities you will have and duties you will perform while assigned to your position:

- Perform associated missile maintenance actions at the launch facilities, missile alert facilities, test facilities, and support base.
- Direct and control the transportation, assembly, and inspection of missile components.
- Operate special purpose vehicles.
- Maintain and use technical orders.
- Practice and supervise safety procedures.
- Conduct maintenance training.
- Support inspections to comply with international treaties.

### Craftsman (7-skill level)

At this point, you have been selected for promotion to staff sergeant and will work towards becoming a craftsman, the code is 2M072. Just like your 5-skill level upgrade, you will be enrolled in a CDC; however, this CDC will prepare you for responsibilities at the next higher levels equivalent to your rank and may include a more managerial understanding of things like supply management, working with higher headquarter (HHQ) agencies, reports, scheduling etc. You will also receive additional OJT. The following are requirements in order for 2M0s to be awarded the 7-skill level:

- Hold a 5-skill level in the Air Force specialty.
- Be at least a staff sergeant.
- Successfully complete your craftsman CDC.
- Be certified on *all* 7-skill level core tasks.
- Complete a *minimum* of 12 months in upgrade training.
- Be recommended by your supervisor and approved by your commander.

As a missile maintenance craftsman, you are expected to fill various supervisory and management positions such as shift leader, team chief, evaluator, production supervisor, flight supervisor, or instructor. The following are just some of the responsibilities you will have and duties you will perform while assigned to your position:

- Solve problems in transporting and assembling missile components.
- Supervise and manage resources dealing with missile maintenance actions.
- Practice and supervise safety procedures.
- Evaluate inspection results.

There are also unique opportunities such as CDC author (after promotion to master sergeant), apprentice course instructor, inspector general team member, and Spacelift positions available to you. To help you work toward the next skill level, here are some other milestones to aid you in becoming a superintendent (9-skill level).

- Complete your CCAF degree and enroll in continuing education programs.
- Attend a noncommissioned officer academy (NCOA) in-residence. You are eligible to attend after your selection for promotion to technical sergeant.
- Upon promotion to master sergeant, enroll in the Air Force Senior Noncommissioned Officer Academy (AFSNCOA) course by correspondence. This course is designed to help prepare you for superintendent positions (9-skill level).

### Superintendent (9-skill level)

Upon promotion to senior master sergeant, you are awarded your 9-skill level. This means there are no core task, CDC, or upgrade training requirements. However, you must complete continuation, qualification, or certification training as required by your duty position and be recommended by your supervisor and approved by your commander. Additionally, master sergeants and senior master sergeants are required to attend the AFSNCOA in-residence.

As a 9-skill level, you will be expected to fill superintendent positions, along with various other staff positions and prestigious positions outside your Air Force specialty. The 9-skill level is usually assigned increased responsibilities requiring an in-depth understanding of resource, organizational, and personnel management.

### Missile and Space Systems chief enlisted manager (2M000)

When you reach the chief enlisted manager (CEM) level, you are at the highest level of proficiency and management skills, and that is what all enlisted personnel should strive for, with the exception of the Chief Master Sergeant of the Air Force (CMSAF). This code has five digits—ending with "000." This identifies chief master sergeants (CMSgt) and CMSgt-selectees as the top enlisted managers. Some examples of CEM positions are command chief master sergeants (CCM), AFCFMs or commandants and superintendents who provide senior enlisted leadership. Common duties are maintenance superintendent and Air Force career field manager.

#### *Maintenance superintendent*

Senior enlisted personnel manage production and assigned resources in a group or squadron to achieve maximum "war-fighting" capabilities.

#### *Air Force career field manager*

Ensure development, implementation, and maintenance of the CFETP. Simply speaking, the AFCFM shapes and provides the direction for the career field, to include the training requirements for the schoolhouse and CDCs.

Up to this point, we have addressed your AFSC and job description. We just took the next step—knowledge of our skill levels. With this knowledge, you are ready for the next lesson—duties of Air Force specialty code 2M0X2.

## 004. Duties of Air Force specialty code 2M0X2

This lesson will focus on the different duty positions you may hold as a 2M0X2, as well as the basics of each job. This list is not all encompassing; you can be assigned to a multitude of other positions throughout the maintenance organization as well as the Air Force, but this list should serve as a start.

Close to your technical training graduation, you probably received a sponsorship package from your first duty station. The individual assigned as your sponsor likely was assigned to the MMT section, since this is the first stop shop for every 2M032 that graduates technical training. From there, your first priority will be to complete your CDC, so you will be oriented to the initial maintenance training (IMT) section that will oversee your CDC completion. Simultaneously, you will likely work in the MMT tool room or the vehicles and equipment section (VES). Now that your CDCs are complete, your career can branch out to one of the X2 specializations: MMT, missile handling team (MHT), survivable system team (SST), or mechanical and pneudraulics section (MAPS). Each of these sections has unique functions and capabilities. What follows is a brief summary of the duties and responsibilities a technician is involved in within each section.

### Missile maintenance team section

In order to perform duties as an MMT technician, you will need to complete a team training course. Team training is a controlled training environment where experienced Air Education and Training Command (AETC) field training detachment (FTD) instructors train students to the "go-no-go" level.

A student will be certified to perform all applicable maintenance tasks as an MMT technician to the "go" level, meaning they have demonstrated they can perform all parts of the task as well as identifying why and when a task must be done and why each step is needed. Technicians graduating team training come out fully capable of performing *nearly* all tasks an MMT technician should be able to do.

#### *Missile maintenance section*

MMTs are composed of five 2M0X2 technicians, one of whom is identified as the team chief. As a MMT technician, you will be responsible for a variety of systems and equipment. Tasks will include mechanically/electrically connecting/disconnecting re-entry systems, guidance and control sections, missile stages, propulsion systems, and secondary ordnance devices at the launch facility to name a few.

#### *Missile handling section*

Similar to the MMT composition, a MHT team consists of at least four technicians—a team chief and three technicians. MHT technicians are directly involved with the removal, installation, transport, shipping and receiving of the Minuteman missile.

#### *Mechanical and pneudraulic section*

Another potential section that you may be assigned to is the MAPS. Once assigned, you will receive in-house training and qualification on all associated MAPS tasks. As a MAPS technician, some of your responsibilities are inspecting, troubleshooting and repairing hoists as well as certifying pneumatic and hydraulic components, weapon system components, support equipment, and special purpose vehicles to dispatching maintenance teams.

#### *Survivable systems section*

The survivable systems team is comprised of two to six technicians (including a team chief), depending on the task to be performed. Once assigned, you will receive OJT for qualification on all associated SST tasks. As a SST technician, some of your responsibilities will include inspecting, troubleshooting and repairing mechanical, pneumatic, and hydraulic components that specifically provide the LCC and launch facility (LF) hardness that will enable the missile launch crew to survive and operate through the effects of a nuclear blast.

### AETC Field training detachment instructor

After spending some time in the field, a select few technicians will have the opportunity to serve as an AETC FTD instructor. As described previously, team training will train and certify all MMT technicians to prepare them for field duties. This is a select group of individuals, as they are chosen from the best technicians and personally appointed by the maintenance group (MXG) superintendent.

### Quality assurance evaluator

Quality assurance (QA) is an even more selective organization. Personnel in QA evaluate and inspect technicians, technical orders, equipment, and other programs as necessary to ensure everyone is doing their job correctly. As a QA evaluator (QAE), you act as the eyes and ears of the MXG commander (CC); therefore, QAEs are selected from the best technicians, supervisors, and team training instructors. Having sharp, highly skilled technicians in QA is necessary since these personnel must tell everyone else if they are doing the job correctly or not.

### Spacelift

Another side of our job, besides working in the missile field or a back shop such as MAPS is working in Spacelift. Spacelift duties will take you to either Vandenberg Air Force Base (AFB) or Cape Canaveral Air Force Station (CCAFS) where you will perform duties as a mission assurance technician (MAT) or as a Spacelift maintenance technician (SMT).

### *Mission assurance technician*

As a MAT, you will perform observations of contractor launch processing activities to ensure the mission is accomplished correctly and safely. While not primarily a hands-on role in Spacelift, your mission is critical to ensure contractor maintenance is accomplished in accordance with space launch processing procedures.

### *Spacelift maintenance technician*

Unlike the MAT position, the SMTs play a hands-on role that work in concert with aerospace contractors in support of responsive space capabilities and other near-term defense technology development programs that provide maintenance, handling, transportation and emplacement of Spacelift boosters. The success of a Spacelift vehicle launch greatly depends upon your keen oversight.

## Self-Test Questions

**After you complete these questions, you may check your answers at the end of the unit.**

### 001. Description of the 2M0 career field

1. What is the enlisted job designator called that every enlisted Airman in the USAF receives?

2. What *three* specialties make up the ICBM career field and support the *overall* nuclear mission?

3. Where would you find the complete duty description and responsibilities of the Missile and Space Systems Maintenance career field?

### 002. Training documentation and career development course

1. What is a CDC?

2. What information is used for the SKT to determine your knowledge of the career field?

3. What document is a “training road map” which *provides* the framework and guidance necessary for planning, developing training requirements, locating training support resources, and identifying minimum core task requirements?

4. What does TBA allow you, as the trainee, and your supervisor to do?

### 003. 2M0X2 career ladder progression

1. What are the requirements to be awarded the 5-skill level?

2. What types of duties can you expect to perform as a 5-skill level technician?

3. What is the *difference* between a 5-skill level and 7-skill level CDC?

4. What are the requirements to be awarded the 7-skill level?

### 004. Duties of Air Force specialty code 2M0X2

1. What training course must you complete in order to perform duties as an MMT technician?

2. What maintenance team is involved with the removal, installation, transport, shipping and receiving of the Minuteman missile?

3. Who acts as the eyes and ears for the MXG/CC?

4. List the two Spacelift duties.

## Answers to Self-Test Questions

### 001

1. AFSC.
2. Missile and Space Systems Electronic Maintenance (2M0X1), Missile and Space Systems Maintenance (2M0X2) and Missile and Space Facilities (2M0X3).
3. The AFECD.

### 002

1. A formal written course that provides personnel with additional knowledge necessary to advance to the next higher skill level.
2. This test is derived from all the information contained in the CDC.
3. The CFETP.
4. Certify task and CDC completion.

**003**

1. Must have a 3-skill level in the Air Force specialty, complete the 5-skill level CDC, be certified on all core tasks, be in upgrade training for a minimum of 12 months (or nine months if in retraining status), have supervisor's recommendation, and commander's approval.
2. Team chief, instructor, shift leader, evaluator, or maintenance controller.
3. The 7-skill level CDC will prepare you for responsibilities at the next higher levels equivalent to your rank and may include more managerial understanding of things like supply management, working with HHQ agencies, reports, scheduling etc.
4. Hold a 5-skill level in the Air Force specialty, be at least a staff sergeant, successfully complete your craftsman CDC, be certified on all 7-level core tasks, complete a minimum of 12 months in upgrade training, be recommended by your supervisor, and approved by your commander.

**004**

1. The AETC FTD team training course.
2. MHT.
3. Quality assurance evaluator.
4. MAT and SMT.

**Complete the unit review exercises before going to the next unit.**

## Unit Review Exercises

**Note to Student:** Consider all choices carefully, select the *best* answer to each question, and *circle* the corresponding letter. When you have completed all unit review exercises, transfer your answers to the Field-Scoring Answer Sheet.

**Do not return your answer sheet to the Air Force Career Development Academy (AFCDA).**

1. (001) What does the character "M" designate in the 2M0XX career field?
   a. Manager.
   b. Flight chief.
   c. Military member.
   d. Missile maintenance.

2. (002) Where do the senior noncommissioned officers in your career field derive the information to develop the specialty knowledge test (SKT)?
   a. On-the-job training.
   b. Air Force career guide.
   c. Weighted promotion course.
   d. Career development course.

3. (002) Which of the following is *not* a function of the career field education and training plan (CFETP)?
   a. Tracks ancillary training.
   b. Provides training references.
   c. Identifies training limitations.
   d. Identifies knowledge requirements.

4. (003) According to documentation in the career field education and training plan (CFETP), what requirement(s) *must* you meet to be awarded the 7-skill level?
   a. Enroll in your craftsman career development course (CDC).
   b. Demonstrate the ability to perform all 7-skill level core tasks.
   c. Complete your craftsman CDC and demonstrate the ability to perform all 7-skill level core tasks.
   d. Be certified on all 7-skill level core tasks identified in the CFETP and complete your craftsman CDC.

5. (004) Who is responsible for inspecting, troubleshooting, and repairing hoists as well as certifying pneumatic and hydraulic components?
   a. Hydraulics section.
   b. Missile handling section.
   c. Maintenance inspection section.
   d. Mechanical and pneudraulics section.

**Please read the unit menu for unit 2 and continue ➔**

# Unit 2. Intercontinental Ballistic Missile Weapon System

**2–1. Weapon System Characteristics ..... 2–1**
005. Intercontinental ballistic missile mission ..... 2–1
006. Deployment and control ..... 2–3
007. Features of the Minuteman III missile ..... 2–4
**2–2. Intercontinental Ballistic Missile Facilities ..... 2–16**
008. Features of the missile support base ..... 2–16
009. Features of the missile alert facility ..... 2–19
010. Description of the launch facility ..... 2–26

TO NEUTRALIZE the aggressive tendencies of foreign powers, the United States maintains a peace-seeking counterforce. A major part of this counterforce is its land-based missile force consisting of the Minuteman III ICBM, which the Air Force is responsible for maintaining. As a missile maintenance technician, you have an important role in keeping the land-based missile force on alert. You maintain a very powerful and critically important weapon system, so it is crucial you learn everything about it. This unit focuses on the mission of ICBMs, features of the weapon system, a general overview of the facilities, and a description of the Minuteman III missile.

## 2–1. Weapon System Characteristics

You play a key role in the success of the ICBM mission, so it is only fitting you comprehend the importance of the weapons you maintain. The lessons within this first section will give you an understanding of the mission, strategic characteristics, and how the Minuteman III weapon system is deployed and controlled.

### 005. Intercontinental ballistic missile mission

At the end of World War II, clashes between American and Soviet interests sparked the beginning of the Cold War. Over the next thirty years, both superpowers built up large arsenals of nuclear weapons to deter the other from attacking. The mid-1980s saw the economic collapse of the Soviet Union and the end of the Cold War as the United States (US) became the world's only superpower. Remember, though, the Soviet arsenal and stockpile of nuclear weapons still exists. During the Cold War, numerous countries developed the technology to build nuclear weapons and even today, unfriendly nations are secretly working to develop both nuclear weapons and other weapons of mass destruction (WMD).

#### Mission

The events of September 11, 2001 caught the attention of the world, brought about the Global War on Terrorism, and changed the role of ICBMs. Traditionally, the primary mission of ICBMs was deterrence of aggression through the threat of massive retaliation. In other words, knowing that the US could unleash the destructive power of its nuclear ICBM arsenal is enough to discourage any potential enemy from launching a nuclear attack against the US. Recent world events further expanded the ICBM mission to deter regional adversaries from employing WMD against our deployed forces. In addition, ICBMs deter nations from supporting or sponsoring terrorist organizations that may employ WMD in a terrorist attack against our nation. This deterrence also prevents potential adversaries from taking aggressive actions that threaten our national security interests, allies, partners, or friends. However, if this deterrence should fail, the mission of the Air Force's ICBM fleet is to deliver thermonuclear warheads to preselected strategic targets. If required, the order to launch an ICBM attack will come from our nation's top leadership position and filter down to the officers who will execute the launch order. Ultimately, the authority to launch an ICBM attack rests with the President of the United States; however, the means of delivering such an attack

rests with Air Force Global Strike Command (AFGSC). The President's order will pass down through several points of contact before reaching ICBM launch crews for verification.

## Strategic characteristics

Before we continue our discussion, you should understand what the term "weapon system" means. A weapon system includes all of the related equipment, material, services, and personnel required to maintain a self-sufficient unit in its intended operational environment.

The Minuteman III weapon system is an offensive strategic system that uses ballistic missiles with intercontinental range. The launch facilities are located in low-population-density areas in the continental US. The five chief strategic characteristics of the system are rapid reaction, thermonuclear striking power, high accuracy, low vulnerability to attack, and high in-commission rate.

### *Rapid reaction*

The rapid reaction characteristic of an ICBM is the capability to launch the missile in less than 1 minute after the launch crews receive and verify their orders. The following four features contribute to the rapid reaction characteristic:

- ICBM stage motors use solid propellant as fuel; therefore, the missile is *always* ready to launch.
- ICBMs are emplaced in launch posture, ready to launch from the silos without preparatory movement.
- ICBMs each have an on-board, guidance-control computer, which is pre-targeted and capable of quick transition from in-place monitoring mode to flight control mode.
- LFs are tied to LCCs with a multipath Hardened Intersite Cabling System (HICS) and radio network which allows the missiles to launch immediately after the launch crew transmits the launch command.

### *Thermonuclear striking power*

The thermonuclear striking power of the ICBM weapon system separates it from other military weapon systems. The Minuteman III ICBM is capable of delivering up to three independently targeted warheads; however, under the new Strategic Arms Reduction Treaty (START), each of the United States' Minuteman III missiles will only carry one warhead.

### *High accuracy*

The high accuracy characteristic of the ICBM weapon system is due greatly to its on-board guidance system. The exact coordinates for each LF are established and loaded into the guidance and control system of the emplaced missile. The on-board guidance and control system of the missile is able to reference its launch point, update and compute flight data, and control all critical missile functions during flight. This accurate and efficient guidance system gives the ICBM the capability to deliver its payload precisely to its designated target.

### *Low vulnerability*

The low vulnerability characteristic of the ICBM weapon system includes all the features that protect the weapon system from potential harmful or catastrophic events. These events may include damage from enemy weapon attacks, intrusions into weapon system facilities by unauthorized personnel, as well as losing the ability to transmit commands necessary for missile launch.

The LFs and LCCs are hardened to withstand attack. This hardening includes measures to resist blast, heat, and radiation. Additionally, launch and missile alert facilities are separated by distances intended to minimize the damage received from any single attacking weapon. Security is maintained by site hardness, inner zone (IZ) and outer zone (OZ) security systems, and security response teams. The capability to launch missiles is assured by redundant control. That is, each squadron of 50 missiles and five LCCs are interconnected. Each LCC is capable of controlling all the missiles within

its squadron. In addition, the missiles can be launched by radio link from airborne launch control centers (ALCC) if missile ground control is disrupted. The inertial guidance system makes the missile independent of outside control after launch and thus immune to attack while in flight. Furthermore, penetration aids confuse target defense systems so the warhead arrives as intended.

### *High in-commission rate*

Historically, the Minuteman III weapon system has maintained an incredible 99 percent missile alert rate. This means nearly the entire fleet is ready for launch at any given time. The high in-commission characteristic of the ICBM weapon system exists for several reasons, including the following:

- The weapon system was designed to operate for long periods with minimal maintenance.
- All LFs are remotely monitored by the LCCs with launch crews on duty 24 hours a day, 7 days a week.
- Launch crews can quickly report any fault indication from the LF or LCC to the missile maintenance operations center (MMOC) located at the missile support base. MMOC personnel then coordinate with other missile support base work centers to dispatch the appropriate maintenance team to the LF or LCC reporting the fault.
- The team takes the necessary equipment, replacement spares, and technical data to fix the fault. Once at the facility, the team troubleshoots, repairs, or replaces the faulty item(s), enabling the sortie to be returned to on alert status.
- Repairable faulty items are returned to the missile support base or depot level function for repair. This remove-and-replace maintenance performed at the LCC and LF minimizes the ICBM weapon system downtime.

## 006. Deployment and control

When the Minuteman ICBM was originally designed, a great deal of effort went into determining the best way to deploy and control the weapon system. This resulted in radical changes to the “old way” of thinking as it pertained to ICBMs. More than 60 years have passed since then and the system is still operating. In the next few paragraphs, you’ll explore how the weapon system is deployed and controlled.

### Deployment

The word “deployment,” means the arrangement or placement of the various components that make up the weapon system. The basic component of the ICBM weapon system is the missile; however, the missile alone doesn’t make the weapon system. The missile needs support in the form of power, environmental support, security, etc. This support is provided by various systems at the LF. Prior to launch, each Minuteman missile is held in a readiness condition at an unmanned, underground-hardened LF. These LFs are dispersed over large, relatively unpopulated areas in the US (fig. 2–1).

Wing I - Malmstrom AFB, MT - 341st Missile Wing
Wing III - Minot AFB, ND - 91st Missile Wing
Wing V - F.E. Warren AFB, WY - 90th Missile Wing

**Figure 2–1. Intercontinental ballistic missile deployment.**

### Control

While the LFs are unmanned, some form of supervision and control is still required. This requirement is satisfied by the crew located in the LCC. The LCC is a hardened facility located

underground at the missile alert facility (MAF). MAFs are located at least three nautical miles from any LF. The LCC is manned by at least two AFGSC launch officers. The LCCs and LFs are organized into a system of Air Force levels in flights, squadrons, groups and wings, as follows:

- One LCC and ten LFs make up one flight.
- Five flights (5 LCCs, 50 LFs) make up one missile squadron.
- Three missile squadrons (15 LCCs, 150 LFs) make up an operations group.
- At Malmstrom AFB and F.E. Warren AFB, the operations group, combined with all of the supporting units (maintenance group, security forces group, mission support group, medical group, etc.) at the missile support base makes up the missile wing. At Minot AFB, the missile wing (MW) is a tenant on the base, so the host unit (5th Bomb Wing) handles various support aspects of the base's mission (mission support group, medical group, etc.).

Command and control (C2) of the weapon system are achieved through a squadron-wide, buried HICS cable network. This system interconnects the five flights in each squadron and provides the capability for any one LCC to control all the LFs in its squadron. Interconnectivity also allows command and status information from each of the five flights to be transmitted throughout the entire squadron. Data processing equipment, located in each LCC and LF, performs the various C2 system functions that include squadron-wide status monitoring, missile launch, operational tests, and remote targeting. Squadrons are not interconnected with each other; however, other types of communication systems and networks exist to provide wing-wide and force-wide contact. Figure 2–2 illustrates how a typical MAF is interconnected to its associated LFs using buried HICS cables.

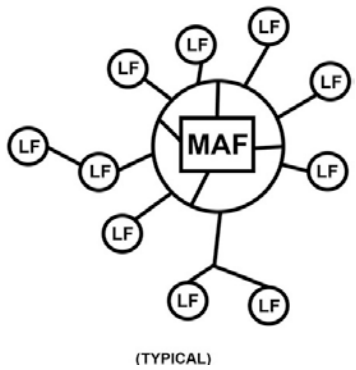


**Figure 2–2. Hardened inter-site cabling system layout (typical).**

In addition, the ICBM Distribution table below shows how the different missile wings are structured.

| ICBM Distribution | | | | |
|---|---|---|---|---|
| **Wing** | **Location** | **Squadrons** | **Weapon System** | **Wing Designator** |
| 341 MW | MALMSTROM AFB MONTANA | 10 MS | WS–133AM/CDB | WING 1 |
| | | 12 MS | | |
| | | 490 MS | | |
| 91 MW | MINOT AFB NORTH DAKOTA | 740 MS | WS–133AM/CDB | WING 3 |
| | | 741 MS | | |
| | | 742 MS | | |
| 90 MW | F. E. WARREN AFB WYOMING | 319 MS | WS–133AM/CDB | WING 5 |
| | | 320 MS | | |
| | | 321 MS | | |

## 007. Features of the Minuteman III missile

Development of the Minuteman missile began in 1958 and in 1962 the first Minuteman I missile became operational. The success of the Minuteman missile was largely due to its solid propellant property which proved much more efficient and stable compared to the liquid-fueled Atlas and Titan

ICBMs. Today our ICBM forces consist of the Minuteman III missile (fig. 2–3). In the following paragraphs, we'll take a look at the various components that constitute the missile.

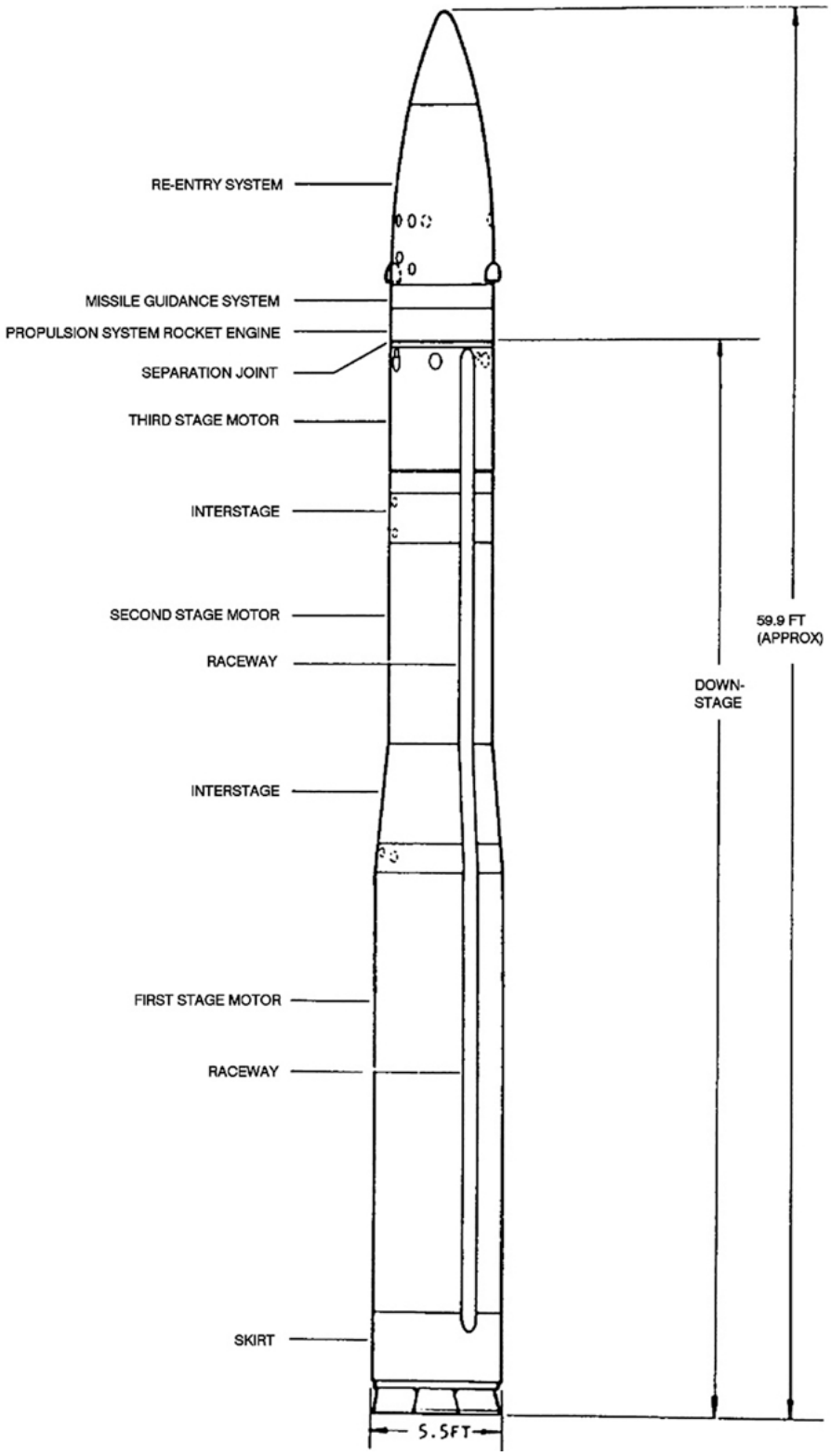


**Figure 2–3. Minuteman III missile.**

### Three-stage, solid-propellant booster (downstage)

The missile's ability to physically launch into a prescribed trajectory and sustain directional control is provided by the missile's downstage. The downstage essentially hosts the missile's engine and steering; however, instead of one gasoline driven motor and a steering wheel like a car, the Minuteman III has three solid propellant tanks (each with its own motor or booster) that provide the necessary thrust for liftoff, flight, and directional control. The following are the components that make up the downstage:

- First stage motor.
- Second stage motor.
- Third stage motor.
- Interstages.
- Aerospace vehicular equipment.

#### *First-stage motor*

The first-stage motor is shown on figure 2–4, and consists of the following:

- Steel case with an aft closure.
- Four movable nozzles.
- Nozzle control unit (NCU).
- Solid propellant.

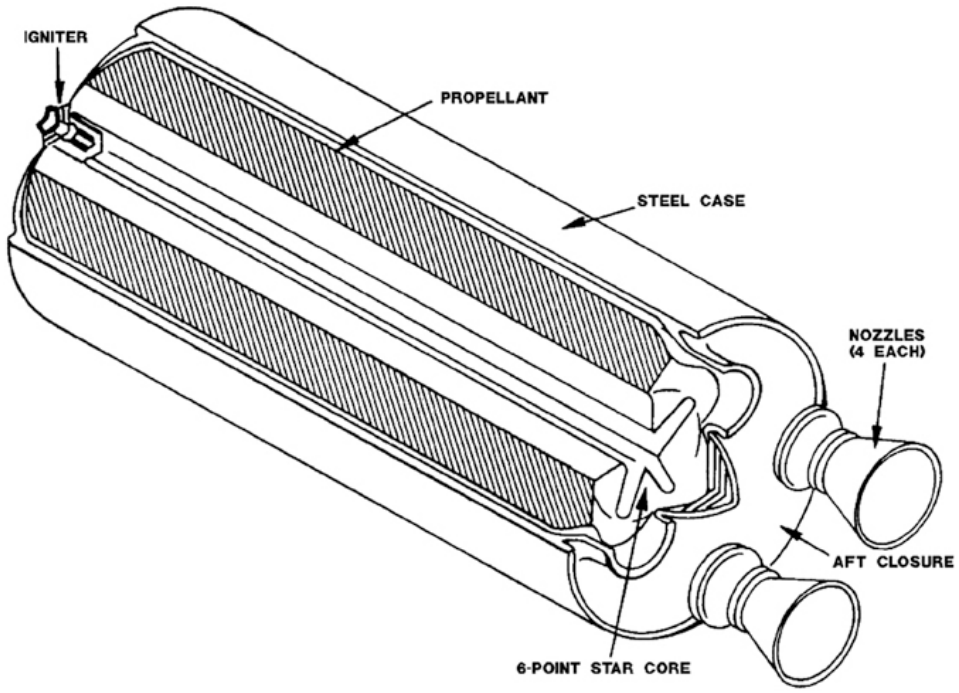


**Figure 2–4. First-stage motor.**

The first-stage motor solid propellant is cast into a six-point-star, hollow-core design with the aft closure filled with propellant which is ignited by the igniter. The design of the solid propellant is crucial to maintaining thrust by keeping a constant surface area as the propellant burns away. An igniter at the forward end of the motor ignites the propellant. The nozzles, which move in response to commands issued by the guidance system to the NCUs, control the attitude of the missile during the first-stage of flight. Attitude, as discussed in this lesson, is the position of the missile as determined by the inclination of its axes (roll, pitch, and yaw) in relation to another object, such as the Earth. An easy way to remember the different axes is to think back to a math class you may have taken where you had to plot points on a graph. If you recall, the “y” points ran up and down on the graph, while the “x” points ran left and right. If you apply that knowledge to a missile’s attitude, the y-axis is the up and down (pitch) movement of the missile, while the x-axis it the left and right (yaw) movement; as a result, through deduction, you now know the z-axis must be the missile’s roll.

The motor case serves as the skin of the missile with the interstage attached at the forward end of the case. Molded plastic, Buna-N-rubber, mastic insulation (resinous protective coating), and high-density graphite parts insulate the motor case, aft closure areas, and the nozzles from the effects of propellant gases. An ethylene-methacrylate-carboxy monomer rubber protects the motor case exterior from aerodynamic heating.

### *Second-stage motor*

The second-stage motor is shown on figure 2–5, and consists of the following:

- A titanium-alloy motor case.
- An aft closure with a single fixed submerged nozzle and exit cone.
- A thrust vector control system.
- A roll control system.
- Solid propellant.

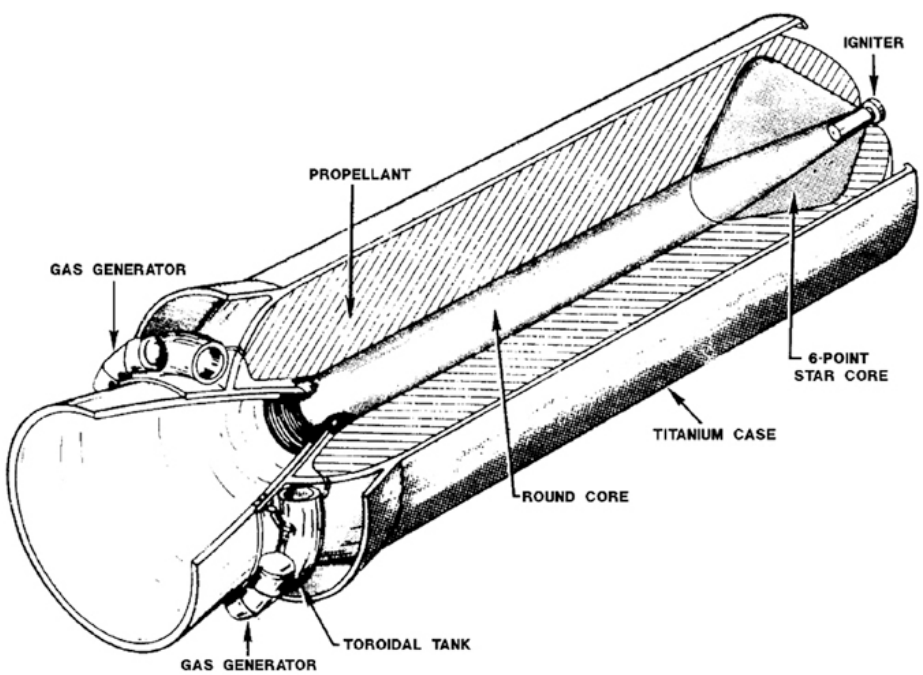


**Figure 2–5. Second-stage motor.**

The aft closure includes a large, single, fixed, submerged nozzle and exit cone; a thrust vector control system and a roll control system. The propellant is cast in a combination six-point-star-and-round, hollow-core configuration with a star at the forward end. Ablative cork insulation protects the second-stage motor from aerodynamic heating.

The thrust vector control system controls the missile's attitude on the pitch and yaw axes by "selectively" injecting a liquid from the toroidal (donut shaped) tank into the nozzle. There are four points, 90 degrees apart, inside the nozzle where the liquid passes through. The resulting high pressure from the liquid injectant causes the nozzle exhaust gases to deflect which in turn causes the missile to pitch or yaw.

In order to accomplish missile roll, solid fuel exhaust gasses are used to drive an exhaust gas generator. The pressurized gasses are then ejected through four roll control nozzles, two on each side, at the aft end of the motor. When two diametrically opposed nozzles are closed off, the remaining thrust couple causes the missile to roll.

### *Third-stage motor*

The third-stage motor, shown in figure 2–6, is constructed of fiberglass and is quite like the motor of the second stage. Attitude changes are controlled by a liquid injection thrust vector control system (again, this is like that of the second stage). The roll control system consists of a gas generator and roll control valve located at the forward end of the motor. The valve exhausts generated gas through two nozzles which extend through the motor skirt. When no roll torque is required, gases are vented through both (diametrically opposed) nozzles, providing neutral roll torque. An all-ordnance thrust termination system consists of six explosive-charged thrust termination ports located on the forward section of the motor.

The third-stage motor boost flight can be terminated before third stage burnout. The third stage is equipped with thrust termination ports in the forward area of the motor case. Signals from the missile guidance set (MGS) cause shaped charges to blow the ports open at thrust termination to vent motor chamber pressure and create a momentary negative thrust. This causes the third stage to drop away from the post-boost vehicle. Thrust termination and mechanical and electrical disconnect of the third stage from the propulsion system rocket engine (PSRE) are sequenced by the guidance set.

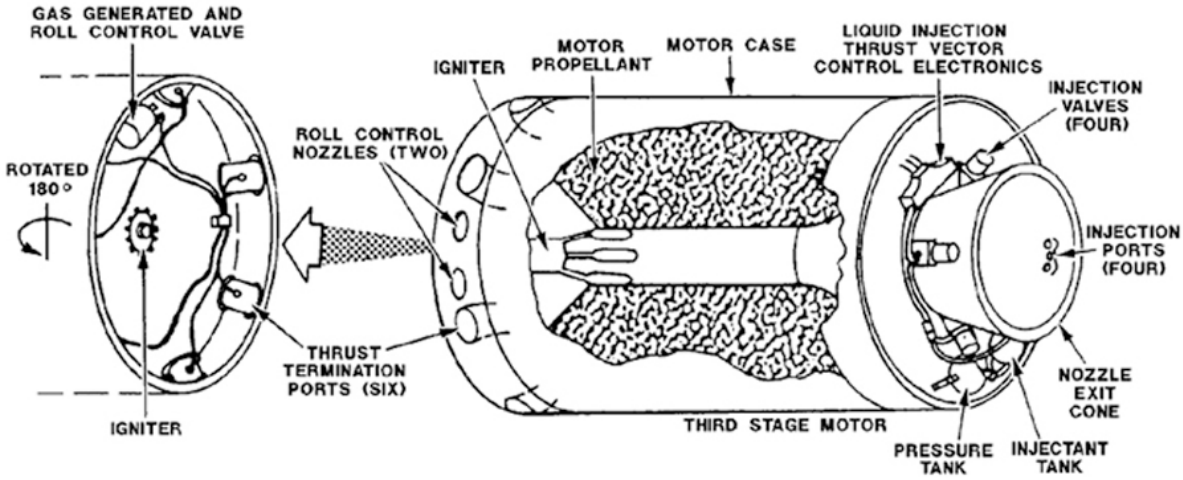


**Figure 2–6. Third-stage motor.**

## Interstages

The interstages, shown on figure 2–7, are aluminum alloy structures that support missile loads for flight conditions. The aluminum alloy interstages aerodynamically join the motor stages and provide stage separation. To accomplish stage separation, the middle interstages are equipped with an arm-disarm mechanism, detonator assembly, and a linear charge, as shown on figure 2–9.

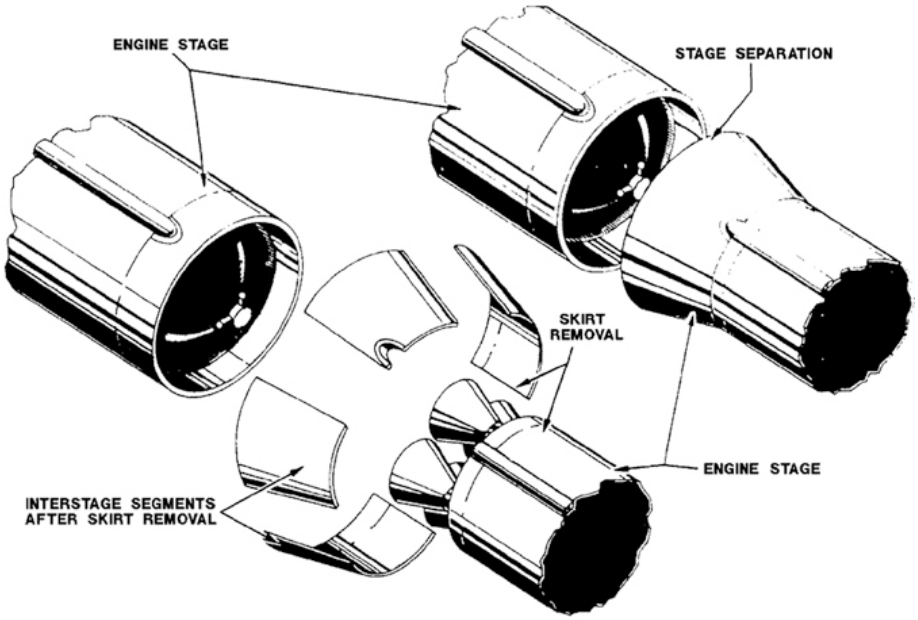


**Figure 2–7. Stage separation, skirt removal.**

The linear charge is installed in an enclosed cavity around the interstage separation joint. For reliability, there is a detonator on each end of the linear charge and electrical connector to the arm-disarm mechanism. For skirt removal after separation, the interstage is equipped with an arming device, skirt-removal linear explosive, and longitudinal-cutting linear explosives. As an example, figure 2–8 shows stage separation and skirt removal.

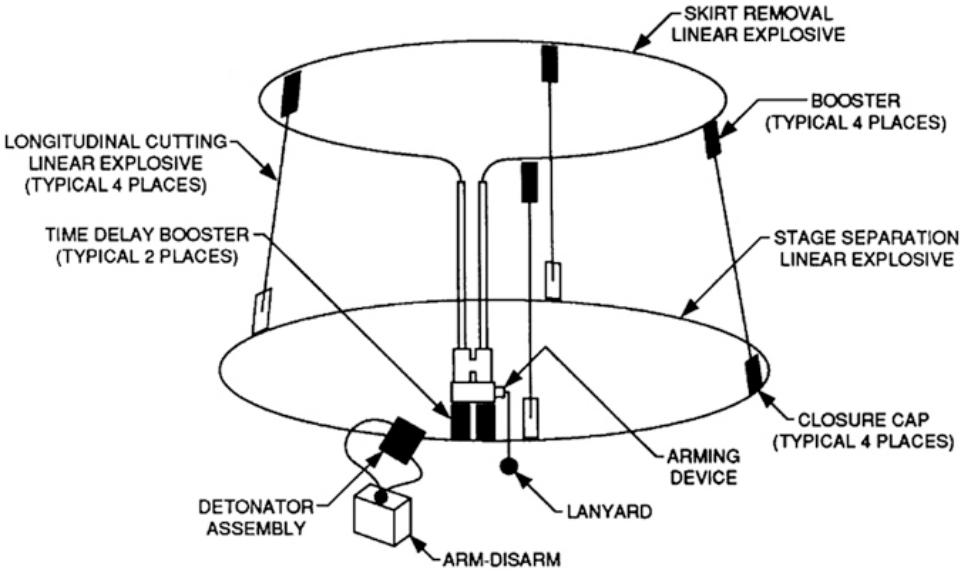


**Figure 2–8. Middle interstage ordnance system.**

## Aerospace vehicular equipment

The aerospace vehicle equipment (AVE) makes up the post-boost vehicle (PBV). These components are responsible for delivering and aiding the payload to reach its destination. The PBV and AVE components are listed and discussed below.

### *Missile post-boost vehicle*

The PBV consists of the following:

- Re-entry system (RS).
- MGS.
- PSRE.

**NOTE:** When the RS *is not* installed and the MGS and PSRE are the *only* components connected together, they are known as the *Post-boost Control System* (PBCS).

#### *Re-entry system*

The RS is illustrated on figure 2–9 and consists of the following:

- Shroud assembly.
- Deployment module.
- Penetration aids.
- Re-entry vehicle (RV).

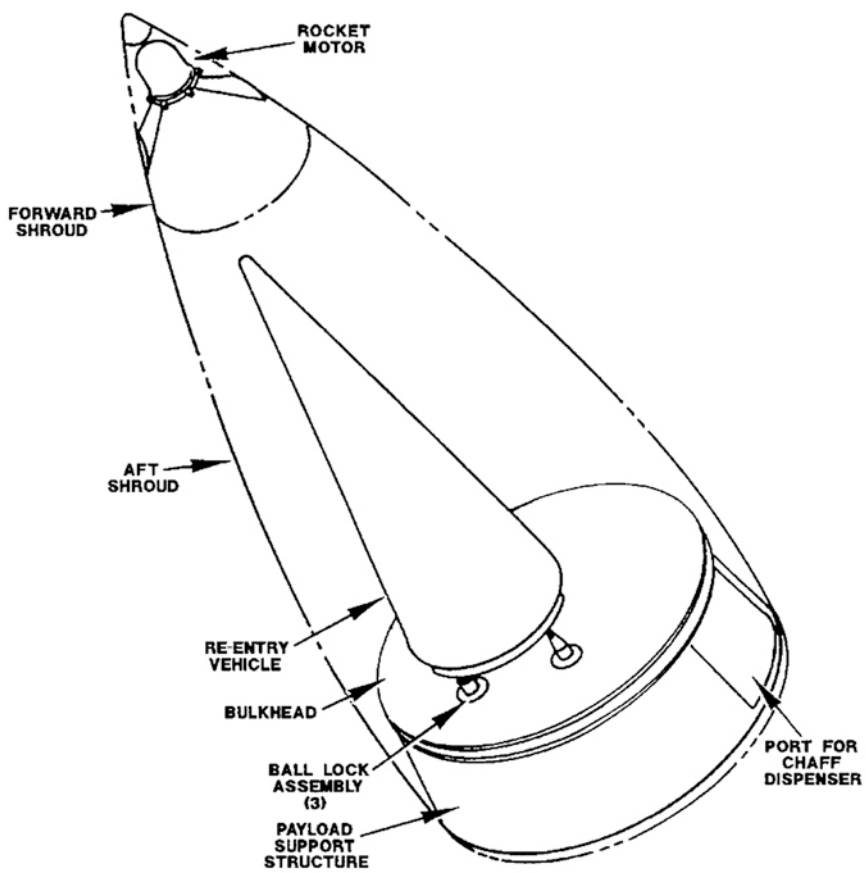


**Figure 2–9. Re-entry System.**

### *Shroud assembly*

The RS shroud assembly is made of titanium. It's composed of a forward and aft section joined by 12 fasteners. During powered flight, the shroud assembly provides environmental protection for the RV, penetration aids, cabling, and associated components. A V-band clamp *attaches* the shroud assembly to the deployment module and detaches just prior to forward shroud rocket motor activation. A rocket motor located in the forward shroud *separates* the entire shroud assembly from the deployment module at a predetermined time, exposing the deployment module and RV.

### *Deployment module*

The deployment module consists of the payload support, which includes a frustum and bulkhead, and an RS installation kit. The payload support bulkhead is a circular aluminum platform that mounts to the forward end of the payload support frustum. Inserts in the platform provide mounting provisions for the re-entry vehicle attachment. The installation kit provides the mount and support fittings for securing the re-entry vehicle to the payload support bulkhead.

### *Penetration aids*

RS penetration aids consist of a chaff subsystem and a chaff dispenser installation kit. The chaff subsystem consists of chaff, two chaff dispensers mounted on the rear face of the payload support bulkhead, each containing a chaff payload. Each dispenser is an electromechanical device which stores the chaff and dispenses it in the required deployment pattern. The chaff consists of numerous wire deflectors of varying lengths and diameters. These are released in groups in response to discrete signals from the missile guidance system. These signals govern the dispenser ejection velocity and feed rate. The chaff dispenser installation kit consists of chaff dispenser attachment fixtures, various chaff subsystem control components, and associated cabling.

### *Re-entry vehicle*

The RV is a high performance ballistic envelope secured to the payload support bulkhead portion of the deployment module by support pedestals. The RV consists of a forward, mid, and aft section joined together by breech-locks. The external surfaces of the RV are composed of ablative carbon phenolic heat shield material with the exception of the central portion of the aft section cover, which is protected with elastomeric shield material. The nose of the RV is protected with a carbon material.

## ***Missile guidance set***

The MGS, shown on figure 2–10, is a cylindrical missile body section that houses the following *major* components:

- Missile guidance computer (MGC).
- Missile guidance set control (MGSC).
- Gyro-stabilized inertial platform (GSP).
- Power distribution unit (PDU).
- Battery assembly.
- Static random access memory (SRAM) battery.

### *Missile guidance computer*

The MGC is designed to compute flight equations and control all missile functions during flight. It processes commands and provides reports of missile and ground equipment status during ground operations.

### *Missile guidance set control*

The MGSC provides interface between the MGC and the GSP.

### *Gyro-stabilized inertial platform*

The GSP is used during flight for navigational reference. The platform is contained in a sealed, gas-filled housing that extends below the MGS and fits into an indentation in the propulsion system rocket engine.

### *Battery assembly*

The battery assembly provides all missile power during flight, except the first-stage exhaust nozzle controls hydraulics. The battery assembly is activated by squibs just prior to launch.

### *Static random access memory battery*

When ground power is removed, the SRAM battery provides power for the MGC in order to retain operational software data, codes, and to provide retention of MGS data.

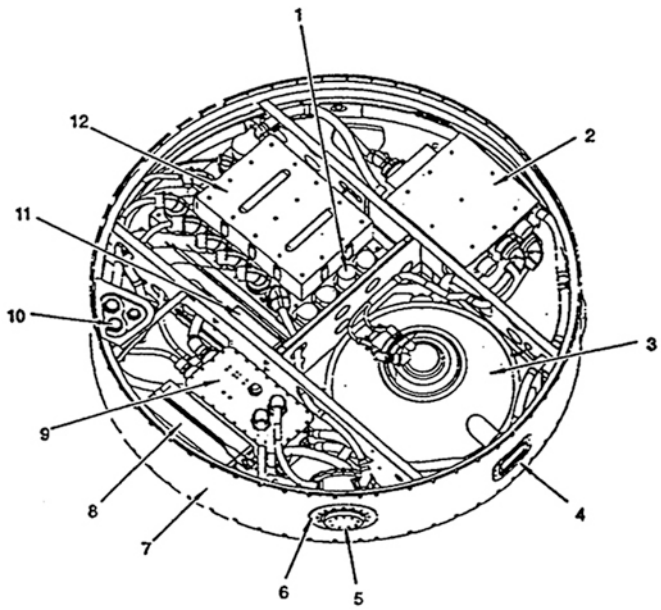


1. PERMUTATION PLUG
2. MISSILE GUIDANCE SET CONTROL (MGSC)
3. GYRO STABILIZED PLATFORM (GSP)
4. OPTICAL ALIGNMENT WINDOW
5. LIQUID COOLANT PASSAGES
6. UMBILICAL RECEPTACLE
7. GUIDED MISSILE BODY SECTION
8. BATTERY ASSEMBLY
9. POWER DISTRIBUTION UNIT (PDU)
10. CONNECTOR FOR R/S
11. SRAM BATTERY
12. MISSILE GUIDANCE COMPUTER (MGC)

**Figure 2–10. Missile guidance set.**

### ***Propulsion system rocket engine***

The PSRE was designed to propel and change the attitude of the RS by providing the necessary post-boost vehicle maneuvering thrust upon command from the MGS. As you've just learned, the Minuteman III uses the three-stage solid propellant motors to reach low-earth orbit. Once this is achieved, the PSRE separates from the third stage motor and uses a liquid fuel to power the eleven rocket engines to position the RS for an accurate jettison of the RVs. This is the fourth stage of the

Minuteman III missile and is connected below the MGS. The components of the PSRE are housed in a metal cylindrical shell (fig. 2–11) and include the following components:

- Eleven rocket engines.
- Propellant storage tanks (fuel and oxidizer).
- Helium system.

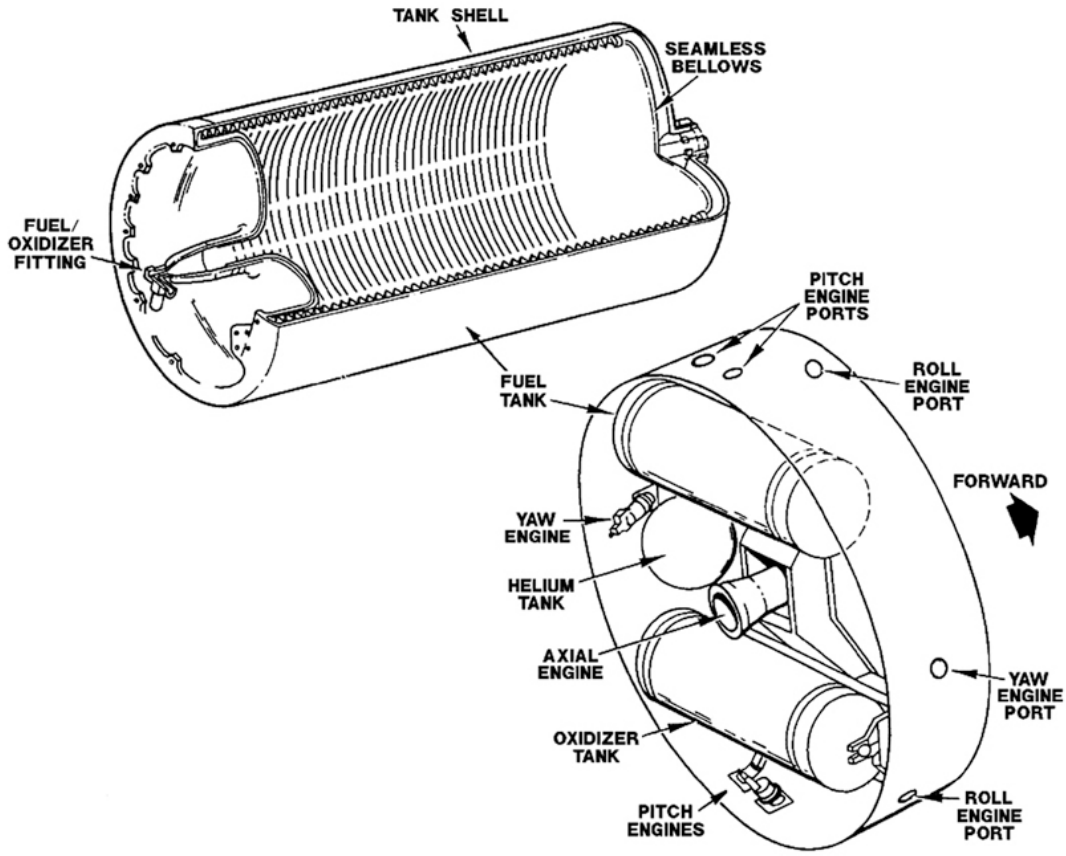


**Figure 2–11. Propulsion system rocket engine.**

### *Engines*

As stated earlier, there are 11 engines. *One* is an *axial* engine that produces 315 pounds (lbs) of thrust for propulsion of the RS. This engine is mounted on a gimbaling device that permits 13 degrees of movement above each of two axes. Four pitch and two yaw engines produce 23 lbs of thrust. In addition, four roll engines produce 18 lbs of thrust. An electrically operated bipropellant valve fires each of the 11 engines.

**NOTE:** All engines operate on hypergolic propellants pressurized by gaseous helium.

### *Propellant storage tanks*

The stainless steel oxidizer and fuel tanks are identical *except* for the differences in the fill-and-drain fittings. This difference prevents incorrect mating of the fill valves to the oxidizer and fuel storage tanks. Inside each tank is a stainless steel seamless bellows (inner tank) that ensures positive expulsion of the propellant. The propellant is contained inside the bellows and helium gas pressure acts on the movable end of the bellows to expel the propellant from the tank.

When the fuel (monomethylhydrazine) and oxidizer (nitrogen tetroxide) ignite on contact with each other (hypergolic reaction), the isolation valve at each tank inlet and outlet is normally closed. These valves confine the propellants until operation of the PSRE is required, at which time squibs fire to open the valves.

*Helium system*

The factory fills the spherical helium tank with about 3,200 pounds per square inch atmosphere (psia) of gaseous helium and it is welded shut. A pressure transducer monitors the helium pressure. When the pressure drops below 2,950 psia, this will indicate a no-go condition. An isolation valve just downstream of the pressure transducer isolates helium pressure from the regulator, relief valve, and propellant storage tanks. After activating the PSRE, the regulator provides 240 pounds per square inch (psi) to the fuel tank and the oxidizer tank. A relief valve protects the system from over pressurization if the regulator fails.

## Self-Test Questions

**After you complete these questions, you may check your answers at the end of the unit.**

### 005. Intercontinental ballistic missile mission

1. Describe the mission of ICBMs.

2. With whom does the authority to launch ICBMs ultimately rest?

3. Who possesses the means of delivering an ICBM attack?

4. List the five strategic characteristics of the ICBM weapon systems.

5. In which strategic characteristic do ICBM stage motors use solid propellant as fuel?

6. Devices to aid warhead penetration and confuse target defense systems are examples of which strategic characteristic?

7. Which strategic characteristic is exemplified by performing remove-and-replace maintenance at the LCC and LF?

### 006. Deployment and control

1. Define the term deployment.

2. What is the minimum number of AFGSC launch officers to man each LCC?

3. What Air Force level is made up of ten LFs and a controlling LCC?

4. How many flights make up a missile squadron?

5. How many LFs does each LCC have the ability to monitor and control?

### 007. Features of the Minuteman III missile

1. What type of core design is used with the first-stage motor?

2. How is the missile's attitude controlled during first stage flight?

3. How are the aft closure and motor case protected from the effects of propellant gases?

4. How is the propellant cast in the second-stage motor?

5. How is third stage separation achieved prior to burnout?

6. The shroud assembly provides environmental protection for which components?

7. What components make up the chaff subsystem?

8. What six major components make up the MGS?

9. How does the RS reach its destination for RV jettison?

10. Why are the fittings on the PSRE oxidizer and fuel tanks different?

## 2–2. Intercontinental Ballistic Missile Facilities

As a maintenance technician, you will spend most of your time working on equipment located at the missile support base, missile alert facility, and LF. This section will familiarize you with the features of those facilities. It is vitally important you understand the layout and the functions of the different facilities you will be working on. You will also find it helpful to refer to the figures as you read the material.

### 008. Features of the missile support base

All maintenance is either conducted on, or begins and ends at the missile support base (MSB). Whether you are dispatching to the field or performing maintenance on support equipment, the missile support base is the center of it all. Keep in mind, each topic must be discussed in very general terms since missile support bases are different from each other in both the layout and number of facilities. You should also keep in mind that existing facilities were used and modified as necessary to serve the needs of the ICBM program.

#### Missile support base

In a nutshell, the MSB is the base you are stationed at (Malmstrom AFB, Minot AFB, etc.). There are two areas of support on an MSB. One area contains the normal support facilities you would find at most Air Force installations, regardless of the base's mission. They include such things as housing, security, medical, and administrative facilities. The other area supports the mission, and in our case, the ICBM mission. This area is known on a missile base as the missile support area, which contains the maintenance facility building, transient storage area, missile transfer building, weapons storage area (WSA), and the proofload test facility. It is here that we will focus our attention.

#### Missile support area

Technicians using the facilities of the missile support area are responsible for maintenance of the ICBM weapon system and its associated equipment. We should point out that the facilities of the missile support area are not always situated in a single location. Sometimes facilities are used jointly by missile maintenance and other organizations on the support base. Every effort is made to locate the missile maintenance facilities as close together as possible; however, this is not always feasible.

### *Maintenance facility building*

When several maintenance facilities are in the same building, the facility is called the maintenance facility building. This building may house the electro-mechanical, facilities maintenance, and missile maintenance sections. It may also contain many back shops that work on support equipment and perform intermediate maintenance on weapon system equipment. These may include the electronics laboratory (ELAB), MAPS, or the power, refrigeration, and electrical laboratory (PREL) shop. In addition, the VES is traditionally located in this area.

### *Transient storage area*

This area provides storage and parking for loaded transporter-erectors (TE). This area is typically located in close proximity to the missile handling section. While parked in the storage area, a portable air conditioning (PAC) unit, which can supply hot or cold air, maintains the TE's container at 60 °F–100 °F (degrees Fahrenheit). Periodically, a missile-handling technician must verify the temperature inside the TE container to ensure that it is within established parameters.

### *Missile transfer building*

The missile transfer building is used for transferring the missile's downstage from its shipping container to the TE. *Downstage* refers only to the missile's first, second, and third stage boosters. The missile is never transported as a whole, and as you will learn later, the missile is assembled in its final configuration only at the LF. There are three methods for shipping the missile downstage from depot to this facility. The primary method of shipping is by road or highway in a missile transporter (MT). Alternate methods are in special rail cars or specially-equipped aircraft. The missile transfer building is used to cross-load the downstage into a TE.

### *Weapons storage area*

The WSA is usually by itself at an isolated area on the base. The WSA is a heavily guarded area protected by a security fence, guard towers, a gatehouse, and a variety of intrusion detection systems. The munitions facility inside the WSA, operated by munitions maintenance personnel, is where they receive, handle, and checkout RVs, RSs, and pyrotechnic components.

The storage warehouse can process and store RV containers, RS components, spare parts, and mobile crew equipment. There is a magazine that provides individual storage bunkers for spare warheads, RVs, and pyrotechnic components.

### *Proofload test facility*

The proofload test facility (PLTF) (fig. 2–12) includes a deep shaft and the equipment necessary to proofload test many items. Proofload testing determines whether items designed to hold a certain load, such as slings and cables, are safe for use within designed load capacities. Some of these items include the load-carrying components of the TE, maintenance support vans (M-Van), payload transporters (PT), and guided missile maintenance platforms (GMMP). If an item fails proofloading, it is not safe for use in the missile field.

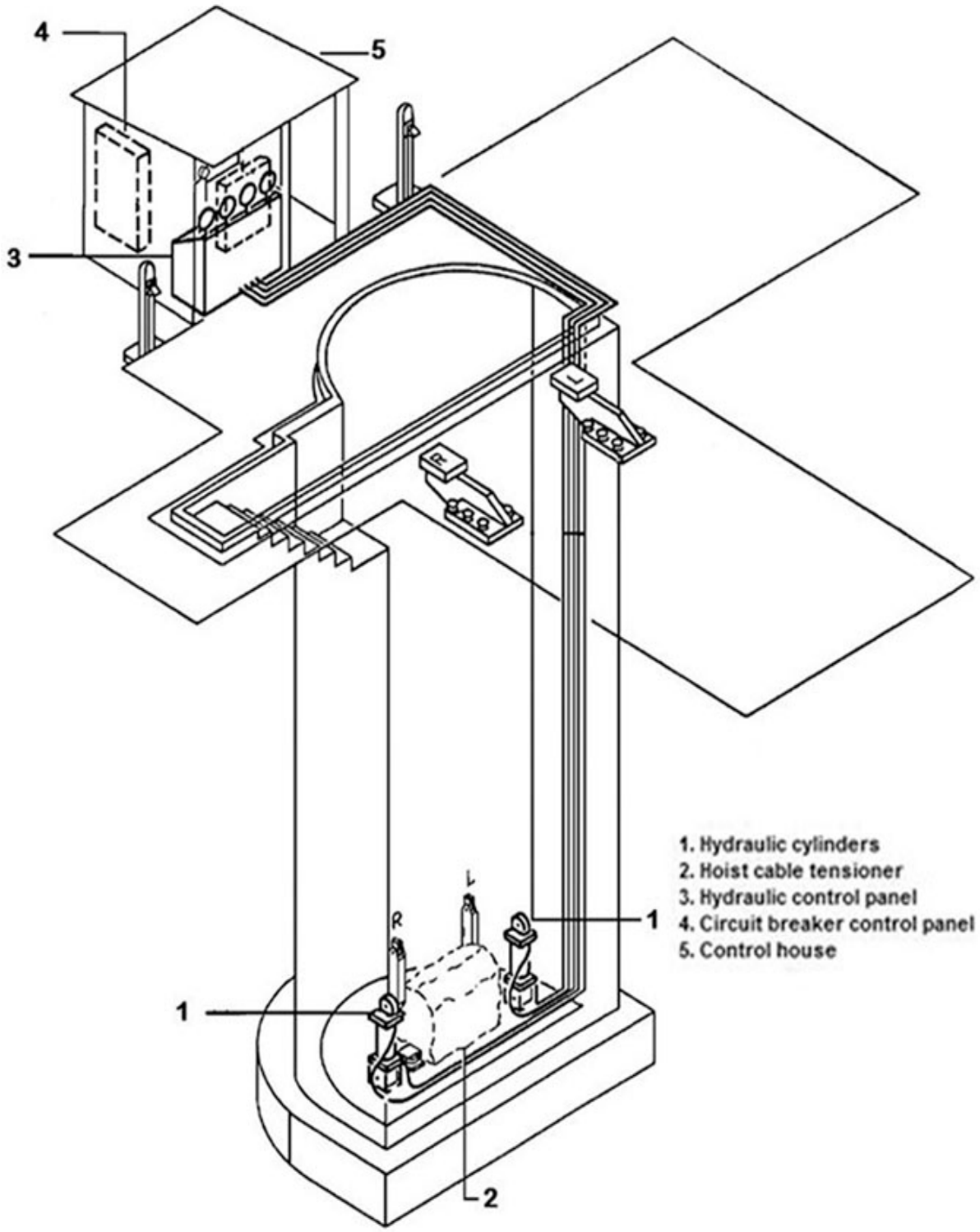


**Figure 2–12. Proofload test facility.**

## 009. Features of the missile alert facility

The MAF is a remote manned facility. The primary purpose of the MAF is to house the two MCC officers on alert so they are prepared to launch the missiles in their flight immediately upon receiving an authentic command to do so. The MAF houses other Airmen in support of this mission, such as the facility manager (FM), security forces personnel, chefs, maintenance personnel, and other MCCs not on alert. There are 15 MAFs at each missile wing. Each MAF has primary control of a flight of 10 LFs; however, under certain circumstances, an MAF can take control of LFs in other flights.

There are some features that are common to all MAFs, regardless of whether you're at Malmstrom AFB, Minot AFB, or F.E. Warren AFB. We will discuss these features first, and then move into the specifics of each configuration. The main difference between the Wing 1 MAF and the Wing 3 or 5 MAF is that the Environmental Control System (ECS) equipment and diesel generator are located *topside* (above ground) at a Wing 1 MAF, while this same equipment is located *underground* at a Wing 3 or 5 MAF. Remember this concept as you study the following information.

### Common MAF features

While there are numerous features common to all MAFs, we can only cover a few of them here. Remember that these common features are located at all MAFs, but are *not* situated in the same physical locations. We will go over personnel support areas, the service area, the security control center (SCC), the elevator shaft, the clean room, blast valves, and the LCC.

#### *Personnel support area*

The personnel support area at a Wing 1 MAF includes sleeping quarters for the FM, chef, maintenance teams in remain overnight (RON) status, and MCC members that are not on alert. There is a kitchen, dining area, computer area, bathrooms with shower stalls, and a recreation area. The recreation area typically has a television and a pool table, but different MAFs may contain other amenities.

#### *Service area*

The service area is the level parking lot within the fenced area of the MAF. This area can accommodate large vehicles, such as the periodic maintenance team (PMT) tractor-trailer. The service area also includes a fuel service station capable of providing unleaded gasoline and diesel fuel for government owned vehicles. At some MAFs, the fueling service station is located outside the fenced area, alleviating the need to go through the security procedures to process onto the MAF.

#### *Security control center*

The SCC is the entry control point for the MAF and also the first point-of-contact to request entry to an LF. This above ground room is manned 24 hours a day, 7 days a week by Security Forces personnel. The SCC dispatches Security Forces teams to the LFs in response to security system alarms and to do weekly checks to verify the security system is functioning properly. This room has a very high frequency (VHF) two-way radio for communication of nonsensitive information and direct telephone communication with the LCC. The SCC also controls the access to the LCC elevator shaft. All personnel requesting access to the LCC must be positively identified and authorized by security forces personnel in the SCC.

#### *Elevator shaft*

The elevator shaft is how personnel get down to the underground LCC. If the elevator is inoperative due to a malfunction or maintenance, there is a fixed ladder that can also be used to get downstairs. The elevator at a Wing 1 MAF is only large enough to transport personnel and small equipment. The elevator at a Wing 3/5 MAF is much larger due to the fact that the diesel generator and brine chiller unit are underground. The elevator is the only means of removing or replacing these large items.

### *Clean room*

The clean room is where any air that enters the LCC is filtered. All air that enters the clean room is filtered by a chemical, biological, radiological (CBR) filter. Air is then filtered by a particulate air filter before going to the LCC. This room is pressurized so that no air can enter the room unless it has passed through the CBR filter. The Wing 1 clean room is located above ground, next to the ECS equipment room. The Wing 3/5 clean room is located underground in the launch control equipment building (LCEB).

### *Blast valves*

A blast valve is used in the weapon system to isolate certain areas in the event of an attack. The instant that the blast valve senses even the slightest overpressure, it snaps shut. This will keep the harmful pressure from a nuclear detonation or other explosion from entering the facility and causing damage to sensitive equipment or harm to personnel. The Wing 1 MAF has two blast valves, one on the intake coming from the topside clean room, and the other on the return duct that goes from the LCC back to the clean room.

The Wing 3/5 MAF has four blast valves:

- One on the air supply duct between the clean room and the LCC.
- One on the air return duct between the LCC and the clean room.
- One on the air intake duct between the topside and the LCEB.
- One on the air exhaust duct between the LCEB and the topside.

If the LCEB diesel generator is running when the blast valves close, the generator will automatically be shut down. This is because the exhaust gasses from the running generator expel from the exhaust shaft. If the shaft's blast valve is closed, the exhaust gasses would have no way to escape, and would begin to contaminate the air supply.

### *Launch control center*

The LCC (fig. 2–13) is an underground structure of reinforced concrete and steel of sufficient strength to withstand *all nuclear weapon effects*. It contains personnel and equipment for controlling, monitoring, and launching up to 50 missiles within the squadron. The LCC outer structure is cylindrical with semicircular ends. The walls are approximately 4½ feet thick. A blast door allows entry into the LCC from the tunnel junction. Essential LCC equipment, along with the missile combat crew, is in a shock-isolated room suspended within the blast-proof outer structure.

The LCC blast door (fig. 2–13, item 11, and 2–14) can withstand nuclear blast overpressure, provides an environmental seal, and shields the LCC from an electromagnetic pulse produced by a nuclear blast. A latch aligns the door before extending the twelve lock pins into recesses in the doorframe. The lock pins are extended and retracted by a manually-operated hydraulic pump from inside the LCC.

#### *Basic design features*

The design and construction of every LCC is basically the same; however, since the responsibilities may vary between the LCCs, there are slight differences in the electronic equipment installed. The LCC has a short entrance tunnel leading into the main section of the capsule called the acoustical enclosure. Once inside the LCC, you will see a variety of electronic equipment. To prevent tampering, this area is a *No-Lone Zone*, meaning at least two personnel, certified under the personnel reliability program (PRP) and able to detect an unauthorized act, must be present at all times. The acoustical enclosure contains all of the equipment required for an MCC to monitor and operate the weapon system. This room contains the emergency air-handling unit and an oxygen regeneration unit.

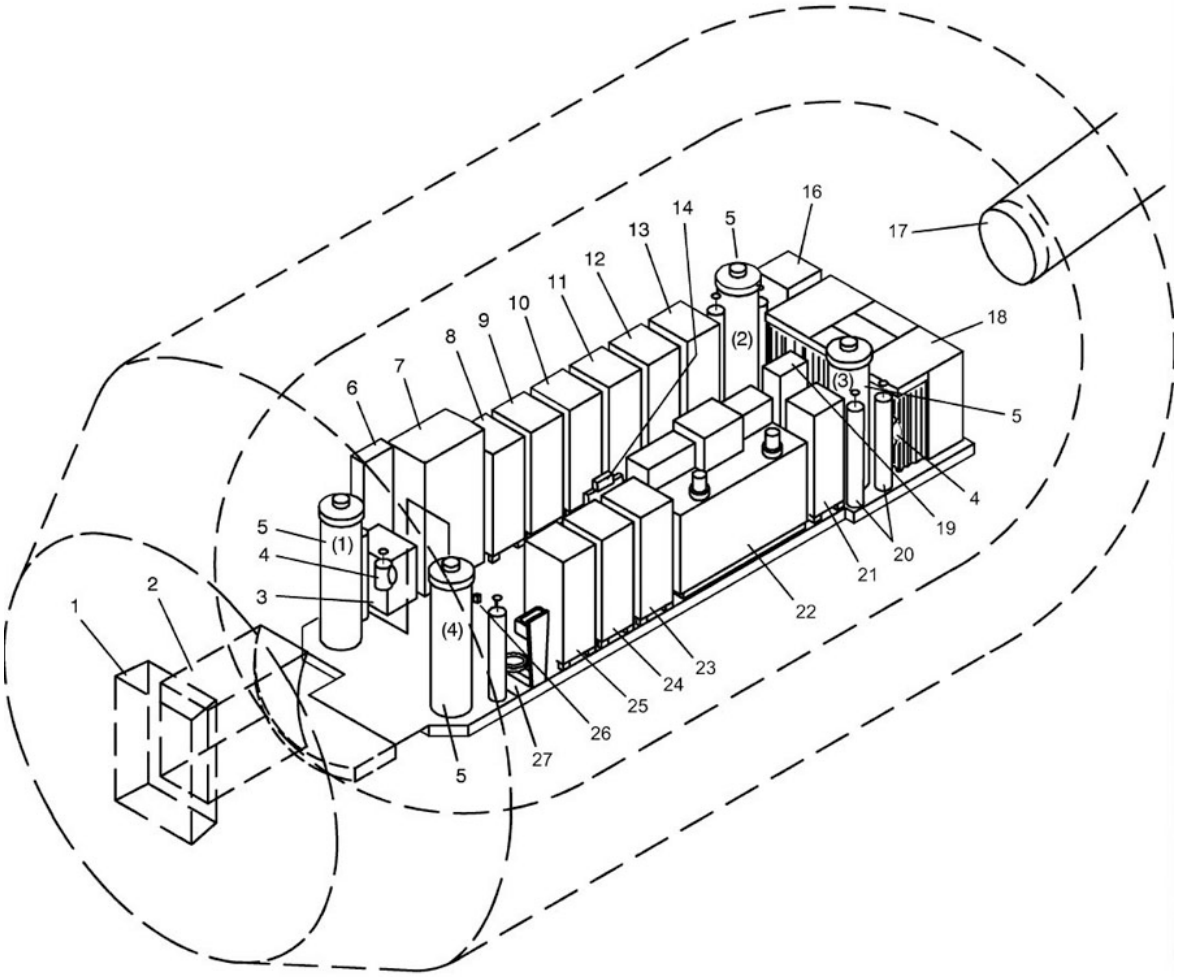


LEGEND

1. BLAST DOOR
2. HORIZONTAL TUNNEL
3. OXYGEN REGENERATION UNIT
4. FIRE EXTINGUISHER (TYPICAL LOCATION)
5. SHOCK ISOLATORS (4 PLACES)
6. LCPA PANEL
7. EMERGENCY AIR CONDITIONING UNIT
8. COMMAND MESSAGE PROCESSING GROUP
9. TELEPHONE SET REPEATER
10. SACDIN K RACK
11. SACDIN M RACK
12. KITCHEN SERVICES GROUP
13. RADIO SET GROUP
14. OPERATORS SEAT
16. POWER SUPPLY GROUP
17. ESCAPE HATCH
18. BED
19. FILE CABINET
20. SHOCK ISOLATOR AIR CYLINDERS
21. DIGITAL DATA GROUP
22. CONSOLE
23. SACCS U RACK
24. EHF AND VLF/LF HAC SYSTEMS EQUIPMENT RACK
25. AFSATCOM GROUP
26. LIGHT SWITCH
27. TOILET AND WASHBASIN

**Figure 2–13. Launch control center (typical).**

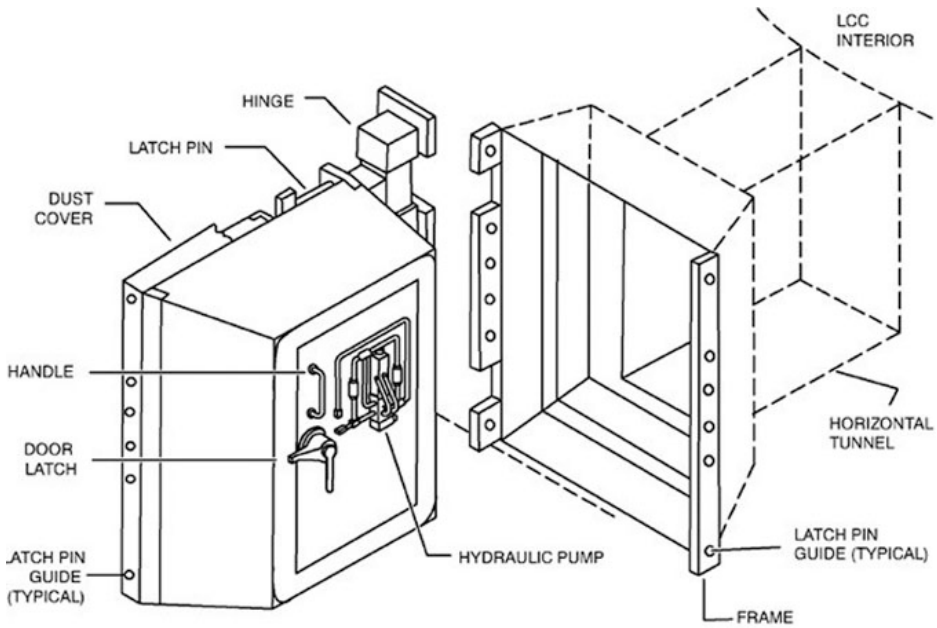


**Figure 2–14. Launch control center blast door.**

To prevent trapping the missile combat crew inside the LCC, an emergency escape hatch and tunnel are located at the far end of the capsule. The tunnel is a corrugated steel tube, which slopes upward from the LCC toward ground level. The tunnel stops five feet from the surface and missile combat crews must dig the rest of the way out. The tunnel is filled with sand to keep it from collapsing.

### *Special designations and missions*

As stated earlier, some LCCs have more electronic equipment than others, depending on their responsibilities; consequently, there are three different LCC configurations. It is easier to understand if you think of each of them as being part of a chain of command (fig. 2–15). On the first tier is the primary LCC (PLCC). There are four PLCCs in each squadron and they report to the next tier, which is the squadron command post (SCP). Only one LCC in each squadron is designated the SCP. One of the SCPs within each wing is designated as the alternate command post (ACP). The ACP LCC reports directly to the wing command post (WCP) and serves as the backup should anything happen to the WCP.

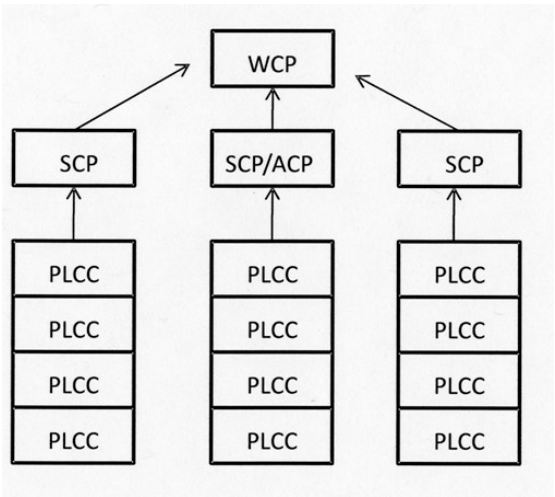


**Figure 2–15. Launch control center designations.**

## Wing 1 missile alert facility specifics

Now that we have covered some of the features common between all MAFs, let's go over the structures that are specific to each wing. The Wing 1 MAF configuration is found only at the 341 MW (Malmstrom AFB). Reference figure 2–16. You can see that the elevator shaft and the LCC are the *only* structures that are located underground at a Wing 1 MAF.

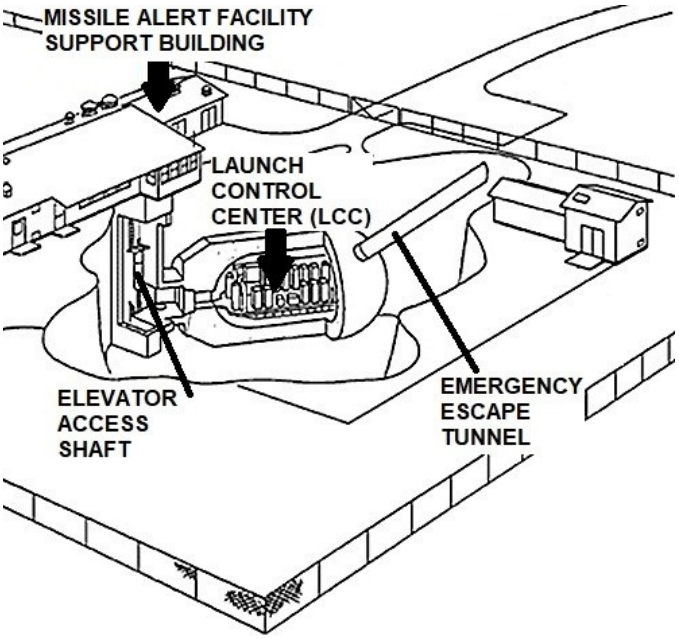


**Figure 2–16. Wing 1 missile alert facility.**

The launch control support building (LCSB) at a Wing 1 MAF is an above ground structure located on the opposite side of the personnel support area. The LCSB includes an ECS equipment room, a clean room, a diesel generator room, and a telephone communications equipment room. Refer to figure 2–17.

### *Environmental control system equipment room*

The ECS equipment room houses the brine chiller unit and associated panels, the CBR air filter and makeup air fan, and the cable air dryer (CAD). The brine chiller unit sends chilled brine through a set of supply and return pipes into a coil inside the air handler unit, which is located in the clean room. A large blower fan in the clean room pulls air through the air handler coil, which cools the air. The cooled air is then sent down to the LCC through a long duct. This cool air is used for removing heat from electronic equipment as well as maintaining a comfortable temperature for the MCC. The CAD keeps moisture from entering the HICS by keeping the lines filled with dried, compressed air. Unlike the Wing 3/5 MAF, the equipment in this room can be removed and replaced through a set of double doors due to the fact that the LCSB is at ground level.

### *Diesel generator room*

The LCSB diesel generator room is a diesel generator that powers the entire MAF, including the LCC, in the event of a loss of commercial power. The generator will start automatically if commercial power is lost. The automatic switching unit (ASU) is also located in the LCSB. The ASU houses the Minuteman power processor (MPP), which is responsible for switching between commercial and standby (diesel generator) power when necessary.

### *Telephone equipment room*

As the name implies, this room contains telephone equipment for the support information network (SIN) line, providing communications between the MAFs and LFs. Every time you pick up the phone or use a headset at the LF to talk to the LCC, you are using the equipment in this room. It also enables the MSB to interface with the ECS Remote Monitoring System (ERMS) at each LF.

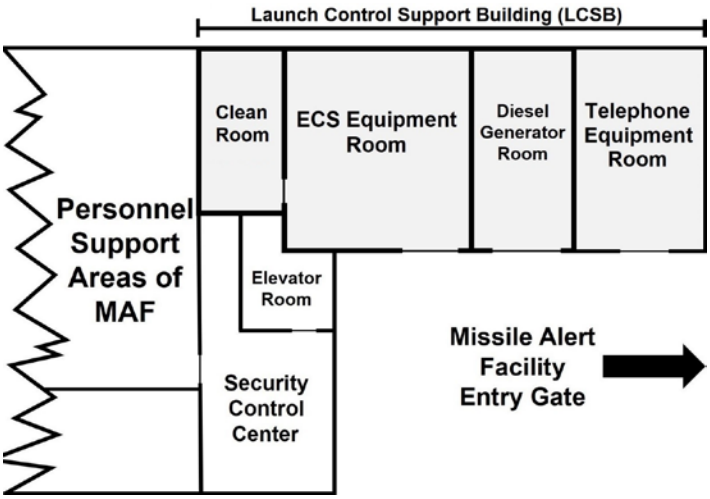


**Figure 2–17. Top-down view of a Wing 1 launch control support building.**

## Wing 3/5 missile alert facility - Launch control equipment building

Now that we have covered the specifics of the Wing 1 MAF, it is time to cover the specifics of the Wing 3/5 MAFs. These MAFs are found at the 91 MW (Minot AFB) and the 90 MW (F.E. Warren AFB).

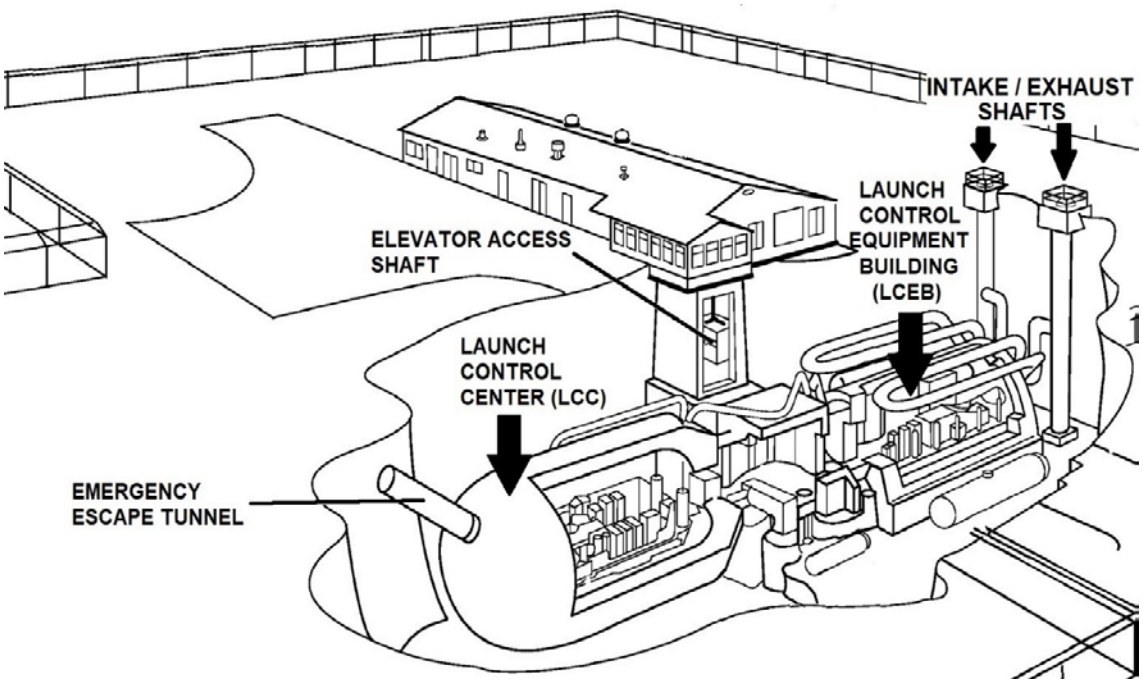


**Figure 2–18. Wing 3 and 5 missile alert facility.**

### *Launch control equipment building*

In figure 2–18, the large structure adjacent to the LCC is the launch control equipment building (LCEB). The LCEB is a buried structure of reinforced concrete, strong enough to withstand some of the effects of a nuclear detonation. The LCEB floor is suspended by shock isolators. It contains the environmental control system and other equipment necessary to make the LCC self-sufficient while isolated for a period of time. Figure 2–19 shows the general layout of the LCEB used at Wings 3 and 5. Some equipment in the LCEB is used for normal operation of the LCC, while other equipment is used only during periods of isolation or commercial power failure. Equipment inside the LCEB includes the normal environmental control equipment, a clean room, a diesel generator, a blast valve hydraulic control unit, electrical controls, and distribution panels. At a Wing 3/5 MAF, the diesel generator in the LCEB starts automatically when commercial power is lost, and only powers the LCC and LCEB. A separate diesel generator, identified in the following paragraphs, powers the topside portion of the MAF.

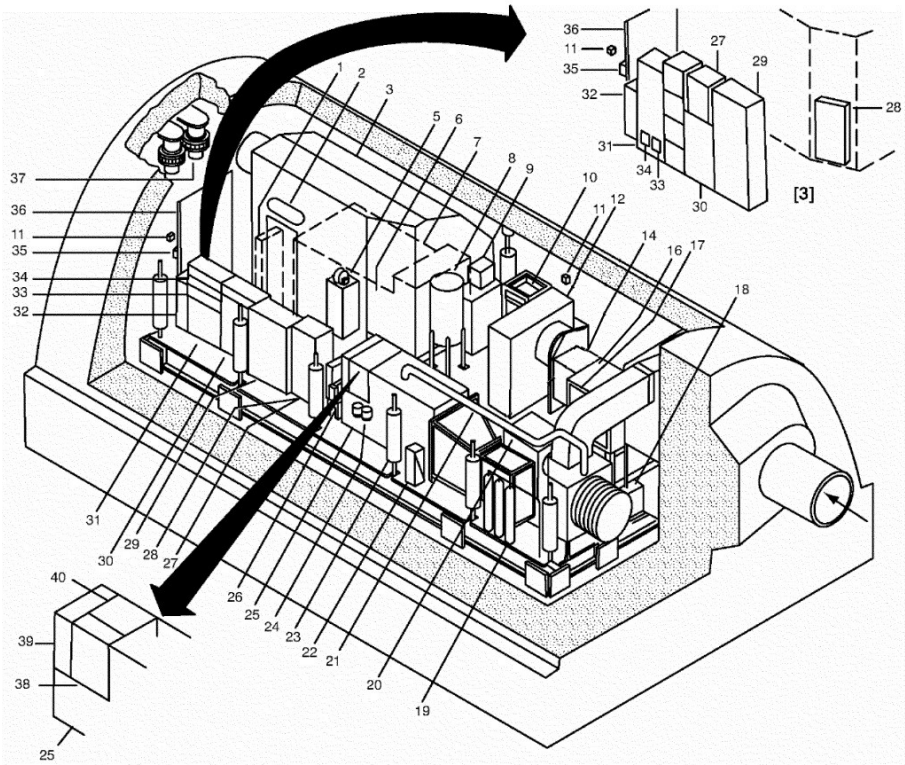


LEGEND

1. AIR HANDLER CONTROL PANEL
2. EXPANSION TANK
3. CLEAN ROOM
5. CBR FILTER AND MAKEUP AIR FAN
6. CBR FILTER AND FAN SWITCH
7. AIR HANDLER
8. DIESEL FUEL DAY TANK
9. SCN HARDENED CABLE AIR DRYER COMPRESSOR AND FLOWMETER PANEL
10. (SIN) TELEPHONE CONNECTING AND SWITCHING SET
11. J-BOX
12. VENTILATION SUPPLY FAN
14. LCEB EMERGENCY WATER SHUTOFF VALVE
16. BRINE CHILLER UNIT
17. BRINE CHILLER CONTROL PANEL
18. BLAST VALVE HYDRAULIC PUMPING UNIT
19. COMPRESSED AIR CYLINDERS
20. VENTILATION EXHAUST PIPE
21. DIESEL EXHAUST PIPE
22. LUBE OIL BYPASS FILTER
23. PLATFORM SUPPORT (12)
24. LUBE OIL FILTERS
25. STANDBY DIESEL GENERATOR
26. LCC SHOCK ISOLATOR AIR COMPRESSOR
27. BUCK-BOOST TRANSFORMER
28. VENTILATION CONTROL PANEL
29. AUTOMATIC SWITCHING UNIT
30. LCDS DISTRIBUTION PANEL AND LCLA LIGHTING PANEL
31. LCDN DISTRIBUTION PANEL
32. RFI FILTER
33. FIRE ALARM CONTROL PANEL
34. LCEB EQUIPMENT MONITOR PANEL
35. LIGHT SWITCH
36. ENTRANCE WAY
37. BRINE LINE SHOCK ATTENUATORS
38. BATTERY CHARGER PANEL
39. ENGINE CRANKING AND MONITOR ALARM PANEL
40. GENERATOR CONTROL PANEL

**Figure 2–19. Launch control equipment building.**

### *Intake and exhaust shafts*

Since the Wing 3/5 MAF's ECS equipment is all underground in the LCEB (fig. 2–19), air must be drawn in and exhausted out through the intake and exhaust shafts. The exhaust shaft is also where the exhaust from the diesel generator is expelled.

### *Topside diesel generator*

If a Wing 3/5 MAF loses commercial power, the diesel generator in the underground LCEB won't provide power to the personnel support areas of the MAF. There is secondary diesel generator located in a room topside that provides power to all above ground portions of the MAF. This generator must be started manually by the FM.

This lesson has covered a lot of information about the MAF. You've learned that there are some key differences between the Wing 1 and Wing 3/5 configurations. The Wing 1 and Wing 3/5 LFs are much more similar; as a result, the following lesson will examine the features of the LF.

## 010. Description of the launch facility

The launch facility (fig. 2–20) is a remote, unmanned missile site situated in relatively unpopulated areas. The LF includes the launcher, launcher support building (LSB), security system, and service area.

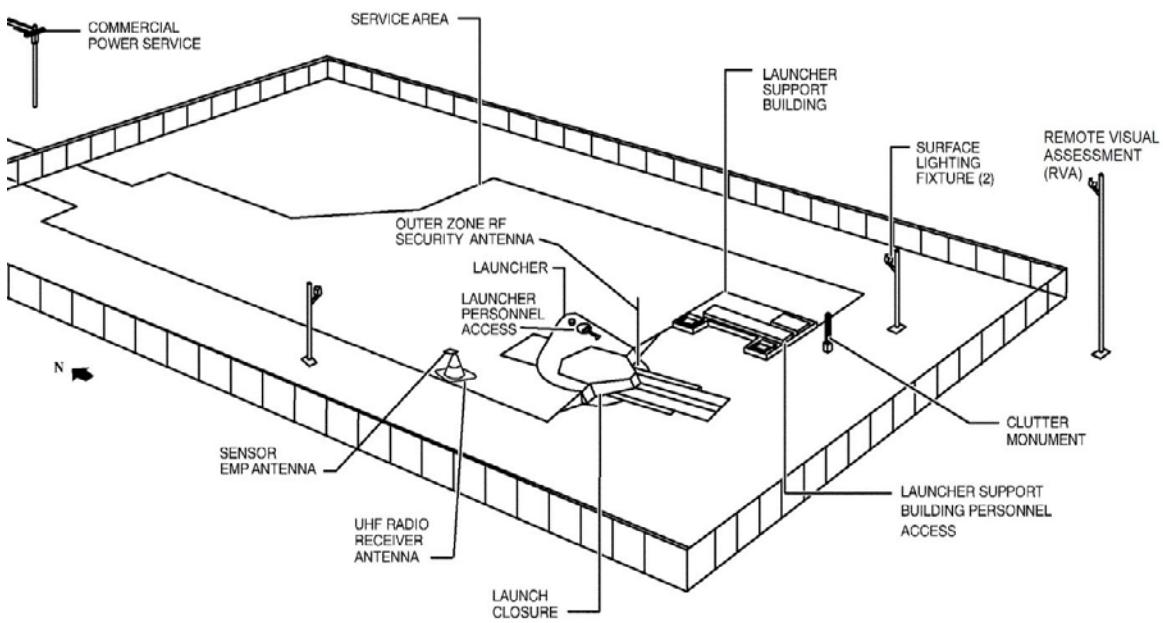


**Figure 2–20. Topside at a launch facility.**

### Launcher

The launcher (fig. 2–21) includes the launch tube, launcher closure, dual-level launcher equipment rooms, and personnel access system. The launcher is designed to survive a relatively high-yield nuclear blast. While studying the following paragraphs, refer to figure 2–21.

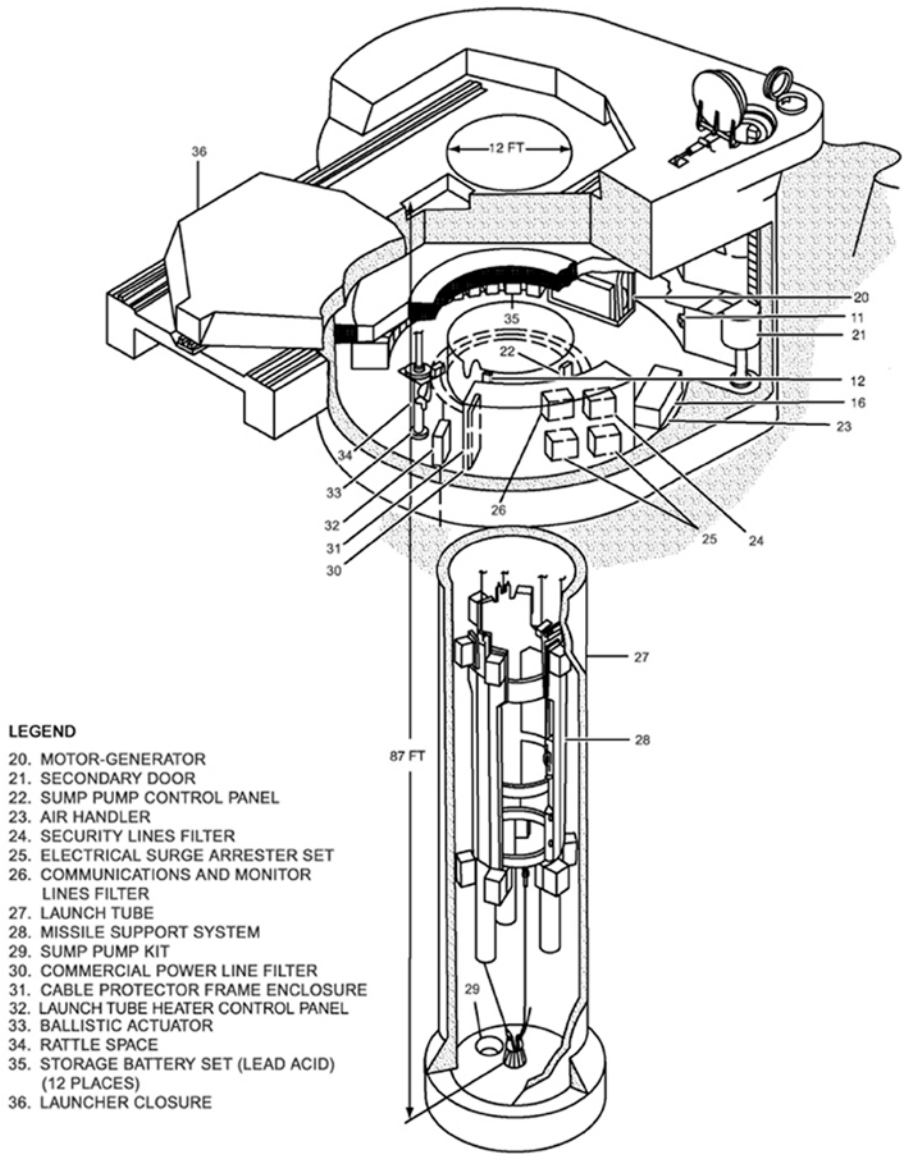


**Figure 2–21. Launcher (typical).**

### *Launch tube*

The launch tube (fig. 2–21, item 27) is an underground cylinder where the missile is stored and launched. A steel launch tube liner provides electromagnetic shielding and protection for the missile. A sump pump, in a pit at the bottom of the launch tube, keeps ground water from accumulating within the launch tube and damaging the solid propellant boosters. When the water level in the sump pit reaches a certain point, the pump is energized, and the water is pumped out of the above ground drain line.

A missile suspension system provides shock isolation and support platform for the emplaced missile. It also permits the missile to be rotated for accurate missile alignment.

### *Missile support suspension and alignment system*

The missile is supported inside the launch tube by the missile support suspension and alignment system (fig. 2–22). This system provides protection for the missile from the effects of shock and ground motion. Additionally, the system assists technicians in rotating the missile for accurate alignment. The system consists of the following components:

- A cage structure.
- Frustum.
- Cables and leveling jack assemblies.
- Twelve horizontal restraints.
- Six articulating arms.
- Three liquid/mechanical shock isolator assemblies.
- Base support assembly.
- Four adapter ring debris defectors.
- A tether assembly.

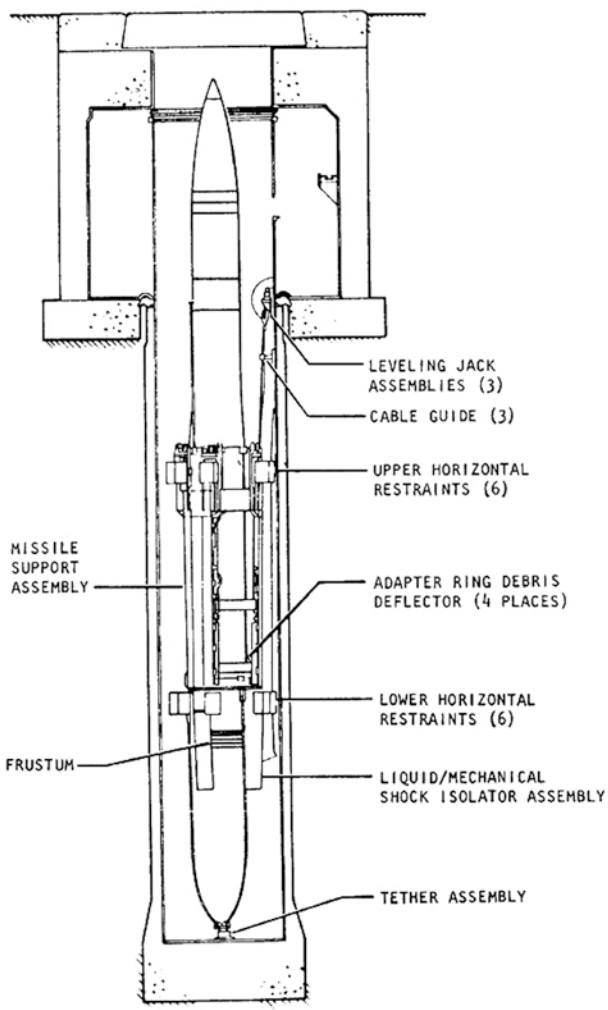


**Figure 2–22. Missile support suspension and alignment system.**

*Cage structure*

The cage structure (fig. 2–22) is the welded framework to which the components of the suspension system are attached.

*Frustum*

The frustum is a shortened cone that is located at the bottom of the cage structure. It's designed to provide nozzle exit plane pressure control during missile launch.

*Cables and leveling jack assemblies*

The entire system is suspended by three cables attached between the three leveling jack assemblies near the top of the launch tube and the cage structure assembly. This design allows the entire suspension system to move much like a pendulum during ground motion.

*Twelve horizontal restraints*

There are 12 foam blocks attached to the outside of the cage assembly. They reduce the probability of the missile or cage structure striking against the launch tube liner during ground motion.

*Articulating arms*

The system's six articulating arms (fig. 2–23) keep the missile centered with respect to the cage structure. Before launch, a dual igniter explosive bolt on each arm ignites to release the arm's latch assembly. Once the latch assembly releases, the fluid-dampened spring-type actuators and multiplying linkages retract the articulating arms away from the missile up against the launch tube linear.

*Shock isolator assemblies*

The three mechanical and liquid shock isolator assemblies protect the missile from vertical shock loads. Additional protection is provided by springs located between the base adapter and receiver ring.

*Base support assembly*

The base support assembly consists of the receiver and support ring. An azimuth drive unit, at the receiver ring, permits for rotation of the missile during missile removal and installation procedures. During missile installation procedures, the missile is rotated until the mark on the adapter ring is aligned with the mark on the receiver ring. Three locks on the receiver ring secure the missile adapter ring in place.

*Debris defectors*

Four debris deflectors installed on the adapter ring prevent any debris from lodging between the base support assembly and the missile nozzles.

*Tether system*

A tether system between the launch tube floor and the bottom of the missile support system *prevents* interference of the missile support with missile flyout.

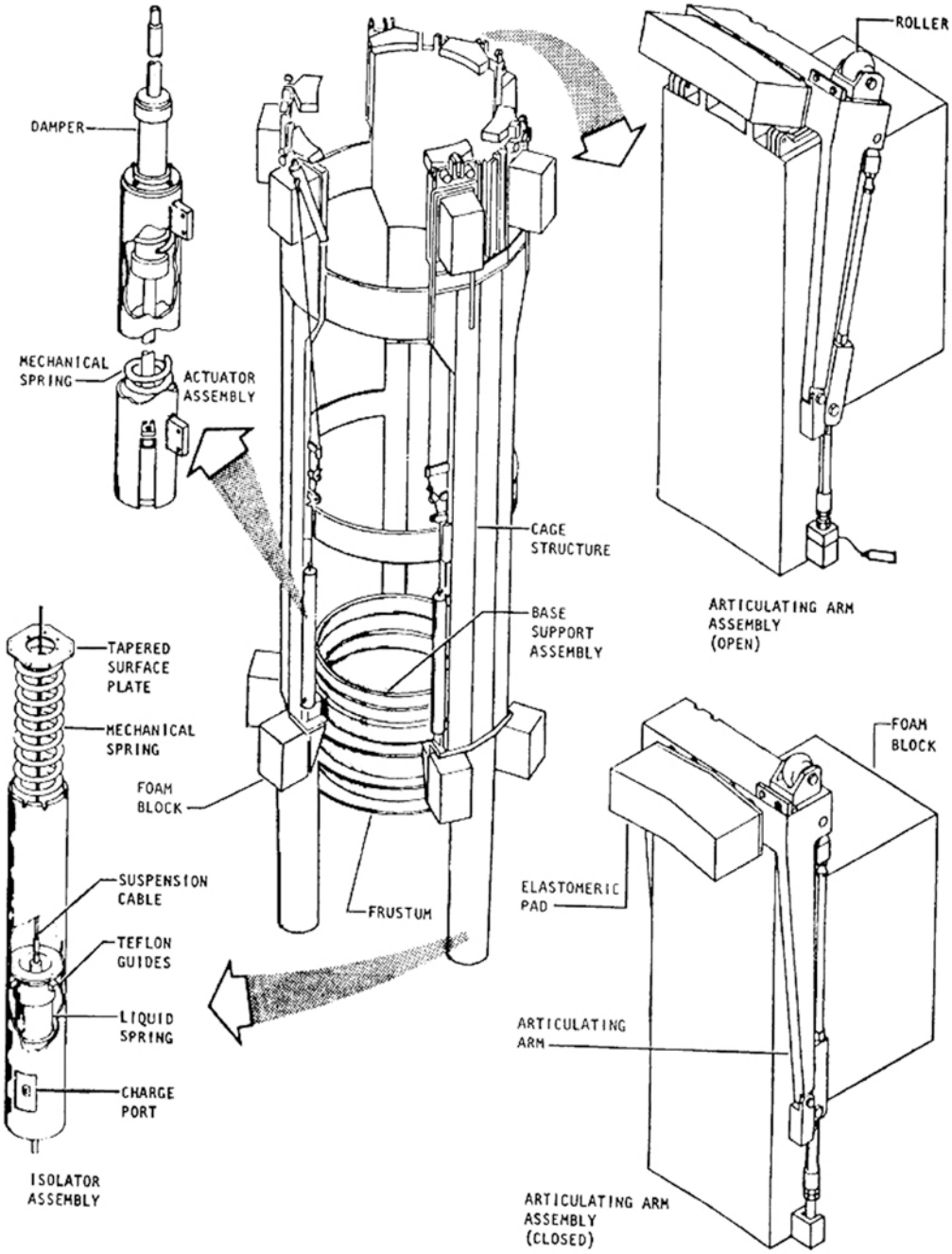


**Figure 2–23. Cage assembly.**

### *Launcher closure*

The launcher closure (fig. 2–24) is a steel-reinforced concrete slab about 4½ feet thick. In the closed position, it rests directly over the top of the launch tube. Vertical movement of the launcher closure door is prevented by its sheer weight (110 tons) and mated beveled edges on the closure sides and launcher roof. A lock pin assembly prevents the launcher closure from being rolled open by

unauthorized means. The closure protects the missile from weapons effects, and also acts as an environmental seal. The closure rolls on four 18-inch diameter steel wheels seated on two steel guide rails. Spring-loaded debris bins are attached to the launcher closure. When the door opens for launch, the bins spring open to form a container to prevent debris from falling into the launch tube and onto the missile. For a launch, the launcher closure door quickly slides open along the steel rails mentioned earlier. If the missile is about to launch, four ballistic gas generators fire with enough force to roll the 110-ton mass of concrete along its steel rails and out of the way. For maintenance purposes, technicians roll the closure open and closed with a hydraulic pusher set.

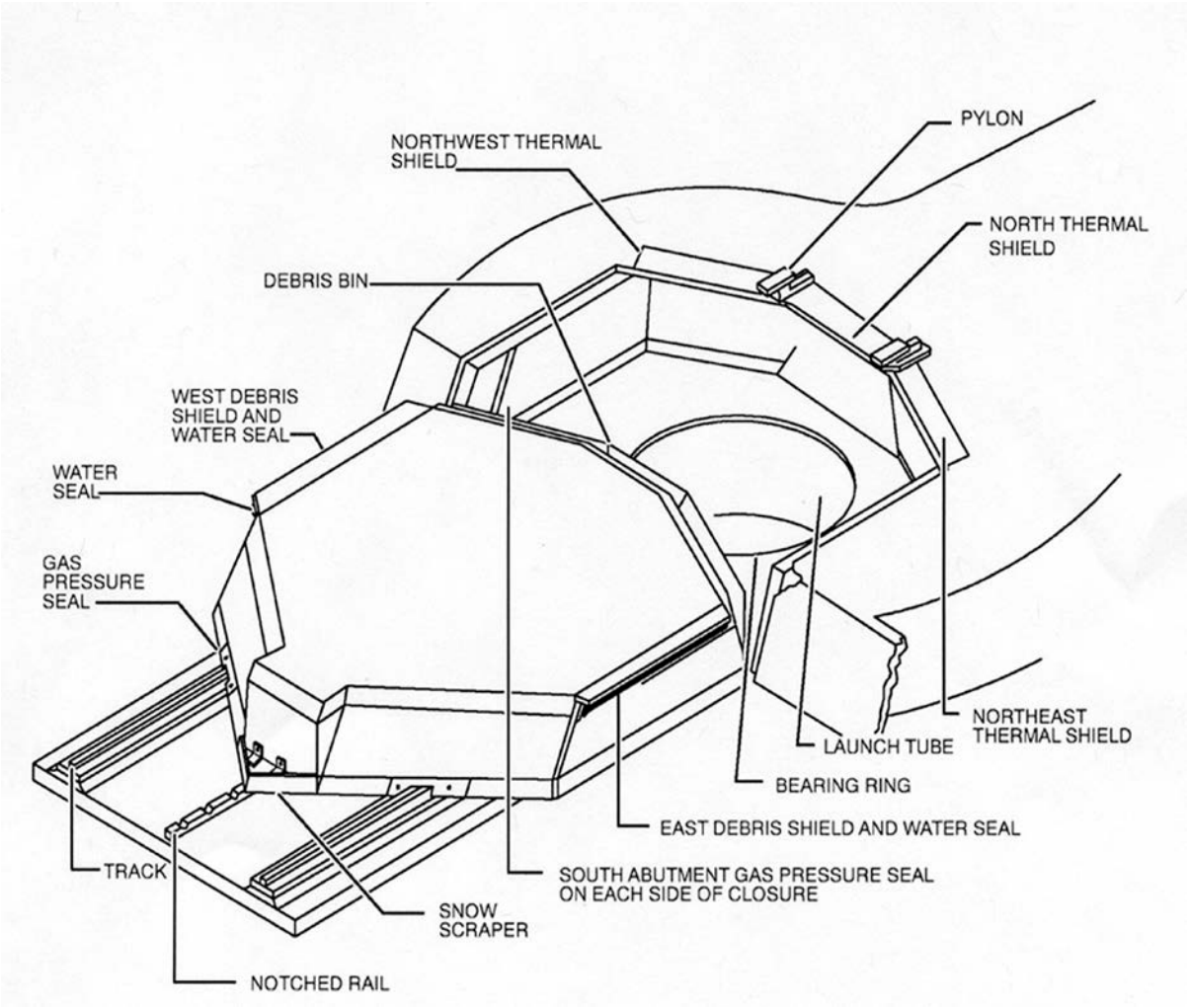


**Figure 2–24. Launcher closure.**

### *Launcher equipment room*

The launcher equipment room (LER) (fig. 2–25) is a split-level, cylindrical, steel reinforced structure that completely encircles the upper part of the launch tube. A 6- to 8-inch gap, or *rattle space*, between the equipment room foundation and the launch tube, permits limited motion between the launch tube and LER without the danger of structural damage. Approximately half of the upper-level LER is shock-isolated to protect the launch-critical equipment from ground shock damage produced by a nuclear blast. Major equipment items found in the LER include the guidance and control chiller unit, motor generator, emergency storage battery set, launch tube heater, ballistic gas generators, and air handler unit.

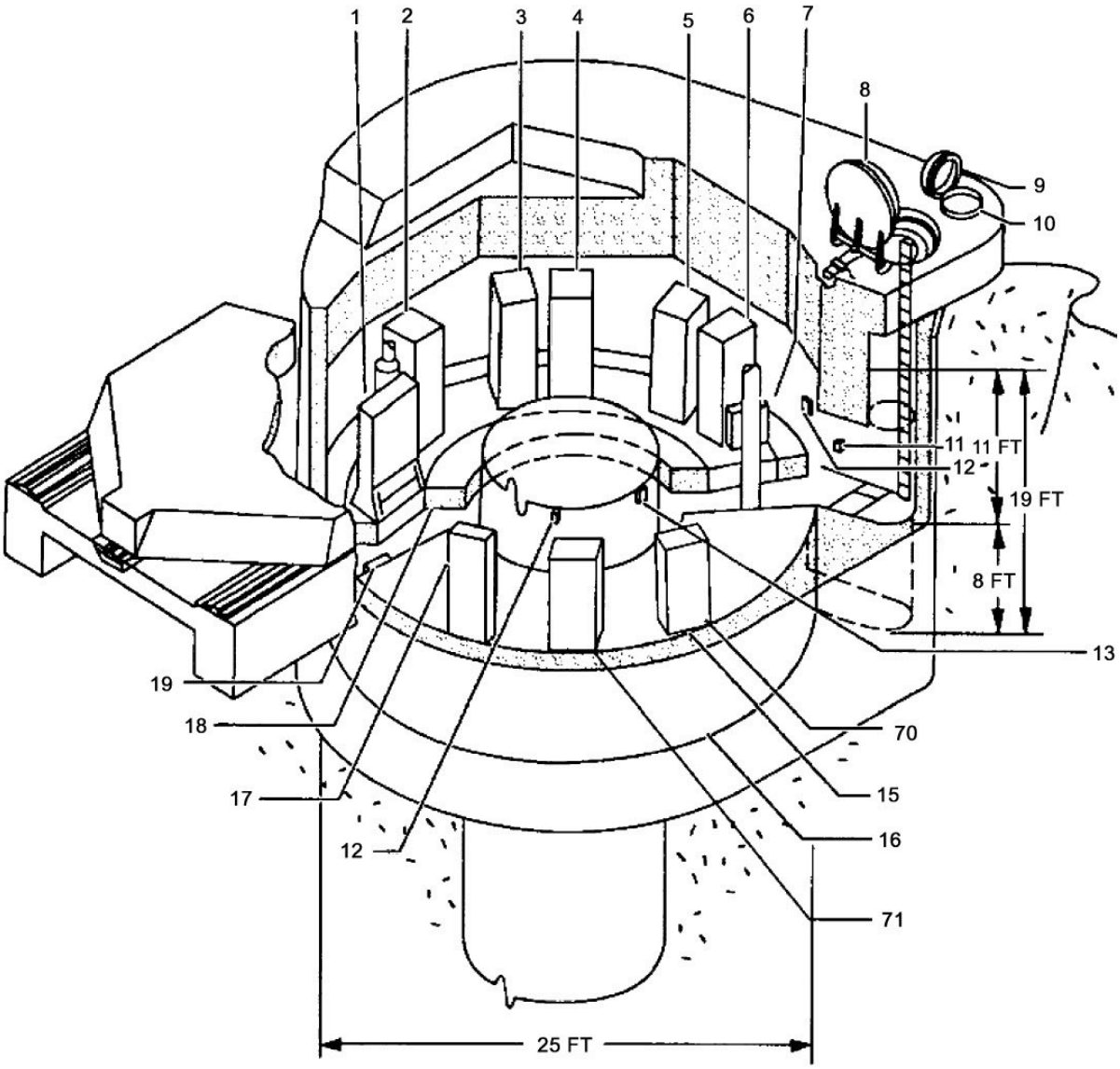


LEGEND

1. DISTRIBUTION BOX
2. GUIDANCE SECTION LIQUID COOLER
3. PROGRAMMER GROUP
4. POWER SUPPLY GROUP
5. UHF RADIO RECEIVER GROUP
6. BATTERY CHARGER-ALARM SET GROUP
7. INTERCONNECTING BOX
8. PRIMARY DOOR
9. SECURITY PIT WEATHER COVER
10. SECURITY PIT
11. LIGHT SWITCH
12. JACK BOX
13. PERISCOPE MOUNT
15. 1ST LEVEL FLOOR
16. 2ND LEVEL FLOOR
17. LDB PANEL
18. SHOCK MOUNTED 1ST LEVEL FLOOR
19. LADDER TO 2ND LEVEL FLOOR
70. MOTOR DRIVE CABINET
71. ENERGY STORAGE SYSTEM

**Figure 2–25. Upper launcher equipment room.**

### *Additional equipment found at launcher equipment rooms*

In addition to the equipment discussed above that is vital to the weapon system, there is support equipment that regulates the environment. Although not directly needed to launch the missile, the equipment maintains an optimal environment inside the LER.

#### *Air conditioning unit*

The air conditioning unit is located in the lower level LER. It uses brine from the brine chiller in the LSB to cool air for distribution to the equipment racks via ductwork.

#### *Emergency fan*

The emergency fan is located on the shock-isolated floor. The fan provides air to the electronic equipment racks *during loss* of cooling air. The fan draws air from an open space in the lower level LER and supplies it to the racks through the ductwork.

**NOTE:** It is important to remember that you have been provided a brief description of *only some* of the equipment found in the launcher equipment rooms.

### *Personnel access*

Entry into the upper-level LER is accomplished by unlocking and removing the security pit vault door, raising the primary door, and unlocking and lowering the secondary door (B-plug) (fig. 2–26, item 9). After the secondary door is lowered, a combination of fixed and telescoping ladders provides access to the upper-level LER. Access to the lower-level LER is provided by a fixed ladder on the opposite side of the upper-level LER. When penetrating the sight, there is a 64 ± 4-minute timer built into the system. This delay is designed to give security forces enough time to respond in the event that someone is trying to gain unauthorized entry into the LER. The delay can’t be bypassed unfortunately, even for a team who has been granted authorized entry.

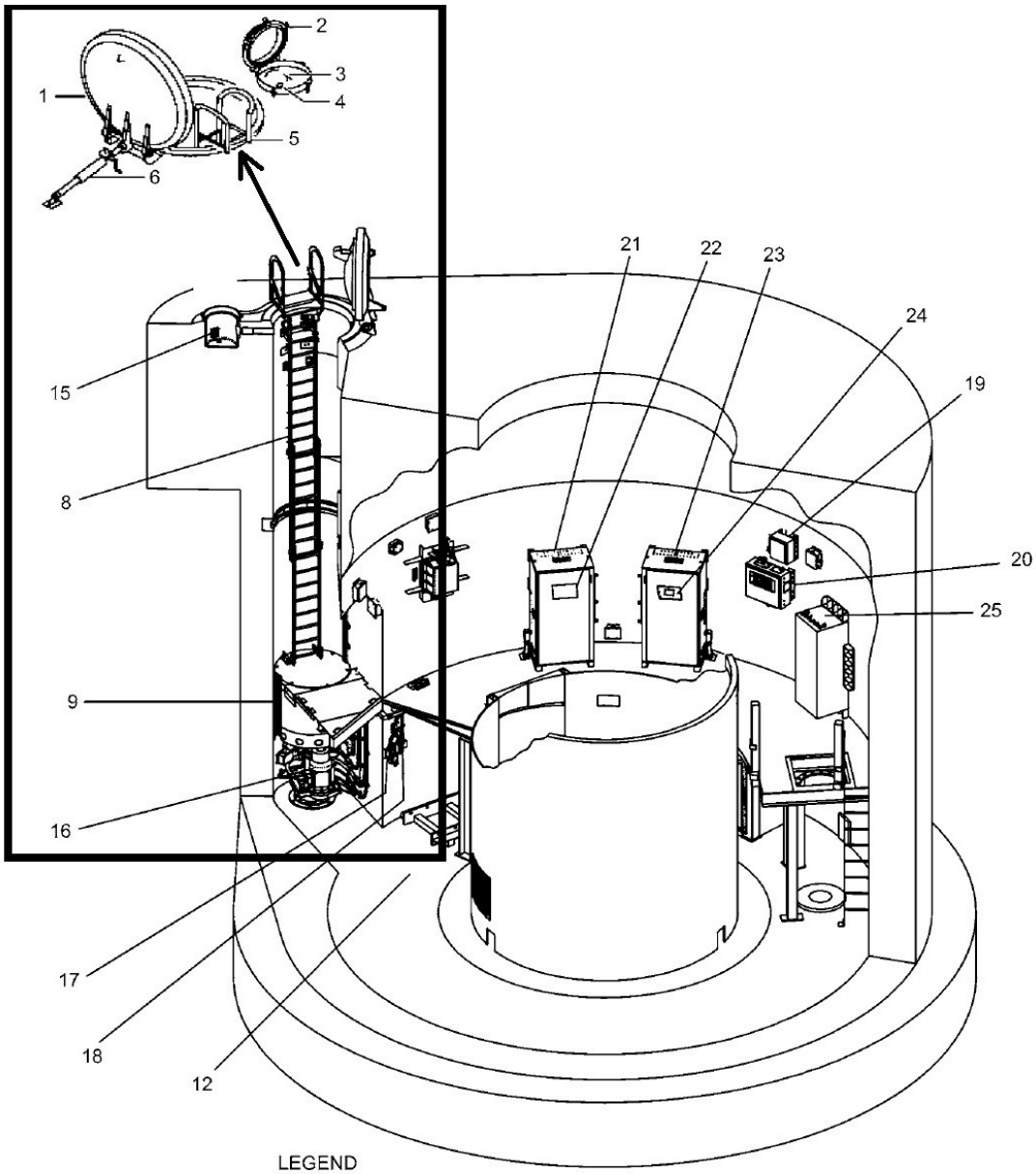


LEGEND

1. PRIMARY DOOR
2. WEATHER COVER
3. VAULT DOOR
4. SECURITY PIT
5. FOLDING LADDER SECTION
6. HAND DRIVEN LINEAR ACTUATOR
8. TELESCOPING LADDER
9. SECONDARY DOOR
12. LOWER EQUIPMENT ROOM
15. SARC J-BOX
16. ELECTROMECHANICAL ACTUATOR (EMA)
17. EMA JOG SWITCH
18. EMA ACTIVATION SWITCH (3 PLACES)
19. SECONDARY DOOR ESA
20. SECONDARY DOOR CONTROL ASSEMBLY
21. MOTOR DRIVE CABINET (MDC)
22. MDC LCP DISPLAY
23. ENERGY STORAGE SYSTEM (ESS)
24. ESS DISPLAY
25. LDB PANEL

**Figure 2–26. Personnel access system (typical).**

## Launcher support building

The LSB is an underground facility near the launcher that houses most of the equipment you will be working with. The LSB's roof is at ground level. A key difference to remember is that the Wing 1 LSB is not shock mounted. It is essentially just a concrete cube that sits in the ground. The Wing 3/5 LSB floors are shock mounted. Two removable steel hatches in the roof permit the removal and emplacement of the brine chiller unit and diesel generator. Entry is gained through an access hatch at one end of the building. While the layouts of the Wing 1 LSB and Wing 3/5 LSB are different, they both contain the same equipment:

- Diesel generator to supply standby power to the launcher in case of a commercial power failure.
- Diesel fuel oil day tank.
- Electric room heater.
- Brine chiller unit to supply cooled brine to the air handler in the LER.
- Cable air-dryer compressor to prevent moisture from entering the HICS cables.
- Automatic switching unit, which houses the MPP to provide automatic switching between commercial and standby power.
- SIN telephone provides the means for nonsensitive communications from the LF to the MAF and missile support base.

Figure 2–27 shows a Wing 1 LSB; figure 2–28 shows a Wing 3/5 LSB.

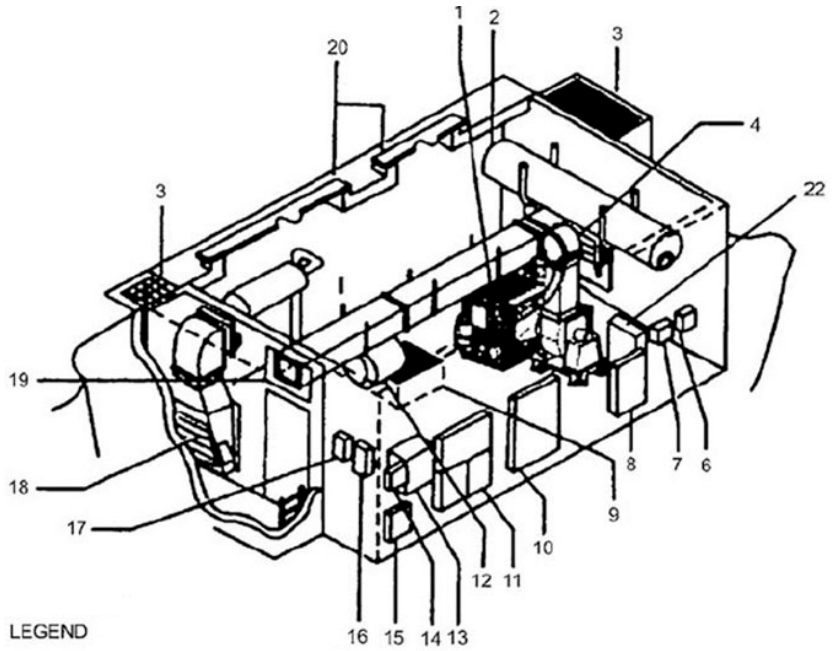


LEGEND

1. CHILLER UNIT
2. DIESEL FUEL DAY TANK
3. AREAWAY
4. ELECTRICAL HEATER
6. SECURITY TERMINAL PANEL (NO. 1)
7. SECURITY TERMINAL PANEL (NO. 2)
8. DRYER-AIR COMPRESSOR
9. SUMP PUMP
10. POWER DISTRIBUTION PANEL
11. AUTOMATIC SWITCHING UNIT
12. DIESEL GENERATOR
13. TELEPHONE SET REPEATER
14. BATTERY CHARGER
15. CRANKING PANEL
16. LIGHTING PANEL
17. SIN TELEPHONE
18. AIR INTAKE
19. BRINE CHILLER EXHAUST
20. EQUIPMENT ACCESS HATCH
22. VENTILATION/BRINE CHILLER CONTROL PANEL

**Figure 2–27. Wing 1 launcher support building.**

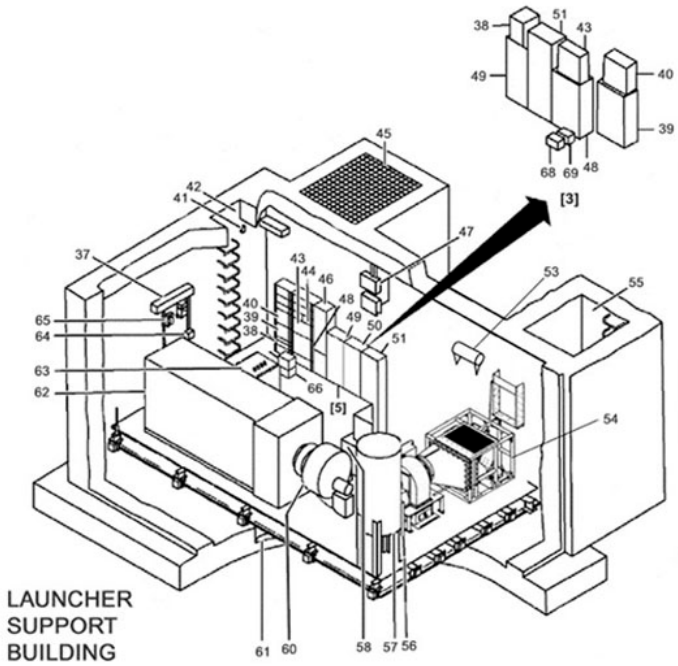


LEGEND

37. TONE GENERATOR
38. MAIN BREAKER
39. LDN DISTRIBUTION PANEL
40. LLB LIGHTING PANEL
41. LIGHT SWITCH
42. PERSONNEL ACCESS HATCH
43. LLA LIGHTING PANEL
44. DIESEL FUEL TRANSFER PUMP CONTROL
45. AIR EXHAUST
46. INTERFACE TERMINAL CABINET
47. SECURITY TERMINAL BOXES
48. LDA DISTRIBUTION PANEL
49. RFI FILTER UNIT
50. VENTILATION CONTROL PANEL
51. AUTOMATIC SWITCHING UNIT
52. (Deleted)
53. BRINE EXPANSION TANK
54. BRINE CHILLER ASSEMBLY
55. AIR INTAKE
56. SUSPENDED PLATFORM
57. DIESEL FUEL DAY TANK
58. DRYER-AIR COMPRESSOR
60. EXHAUST BLOWER
61. SUMP
62. DIESEL GENERATOR
63. REPEATER TELEPHONE SET
64. JACK BOX TO LAUNCHER
65. SIN TELEPHONE
66. BUCK BOOST TRANSFORMER
67. POWER DISCONNECT PANEL
68. SUMP PUMP CONTROL
69. DIESEL FUEL TRANSFER PUMP CONTROL

**Figure 2–28. Wing 3 and 5 launcher support building.**

## Launch facility security system

Remember, the LF is unmanned the majority of the time, meaning there are no security teams on site. The function of the LF security system is to detect unauthorized activity at an LF. The system is divided into the OZ and IZ security systems. The OZ system monitors the above ground area and the LSB, and the IZ system monitors the launch tube below ground level and the entrances to the launcher. All detected security violations are displayed on the console in the LCC. That information is passed to the SCC, where Security Forces personnel will be dispatched to determine the cause of the alarm. If you set off the security system without prior authorization, you will be confronted by security forces personnel who will put you at a disadvantage, or “jack you up”, until your identity can be verified.

### *Outer zone*

The OZ security is the first system you will encounter upon entering the site. This system uses a radar surveillance system, centered on the Improved Minuteman Physical Security System (IMPSS) pole. Objects moving inside the surveillance area are detected by the IMPSS pole and an OZ alarm will be generated by the electronic security drawer in the LER. The system is able to distinguish precipitation (rain, snowfall, etc.) and small animals from intruders, which helps to limit the number of nuisance alarms.

At Wing 1 LFs, the surveillance extends to the LSB. These LFs are equipped with a continuity loop on the LSB entry door. A switch is installed on the LSB entry door, so when the door opens, it breaks

the continuity loop. The security drawer in the LER will sense an open circuit, and it will generate an OZ alarm.

### *Inner zone*

The IZ security system is divided into a continuity loop and a network of vibration-sensitive transducers. The IZ continuity loop contains switches on the launcher closure door, launcher closure door lock pin, primary door, and combination locks on the security pit vault door and secondary door. When the site is secured and no IZ alarms are reporting, the switches are all closed and the continuity loop is complete (closed). Any movement of the combination dials, lock pin, primary door, or launcher closure opens the continuity loop, breaking the circuit to the security drawer in the LER sending an IZ alarm to the LCC.

The second part of the IZ alarm system includes a set of vibration-sensitive transducers located within the walls of the LER and launch tube. The transducers detect attempts to tunnel into the launcher by turning vibrations into electrical signals that the security drawer looks for. This prevents attempts to dig or drill into the launcher, circumventing the OZ system. This portion of the IZ alarm is typically set off by earthquakes.

### *Remote visual assessment*

The remote visual assessment (RVA) is a camera system mounted on a pole just outside the fence on the southern side of the LF. The video feed is sent to the MAF, where it can be seen on monitors in the SCC. This video feed is useful for monitoring the height of snow accumulation topside at the LFs, as well as visual verification of OZ/IZ alarms.

### Service area

The last portion of the LF to cover is the service area, which is the level area within the security fence of the LF. The area is used primarily for maintenance and support vehicle maneuvering and parking. Pylons are located near the launch tube along with tie downs and jack pads, which are used to support the transporter-erector during a missile downstage emplacement or removal. There are also antennas in the service area, but these areas are protected from vehicle damage by barrier poles.

## Self-Test Questions

**After you complete these questions, you may check your answers at the end of the unit.**

### 008. Features of the missile support base

1. Match the areas/facilities in column B with their functions in column A. Items in column B may be used once, more than once, or not at all.

*Column A*

____ (1) Area/facility responsible for intermediate maintenance on weapon system equipment.

____ (2) Where storage and parking is provided for a loaded TE.

____ (3) Area/facility where the missile is transferred between the shipping container and the TE.

____ (4) Area/facility for checking out RVs.

____ (5) Where storage is provided for spare warheads and pyrotechnic components.

____ (6) Area/facility for determining if equipment is safe to use within designed load capacities.

*Column B*

a. Missile transfer building.
b. Proofload test facility.
c. Weapons storage area.
d. Missile support area.
e. Transient storage area.
f. Maintenance facility building.
g. Missile support base.

### 009. Features of the missile alert facility

1. What is the main difference between the Wing 1 MAF and the Wing 3 and 5 MAF?

2. Where is the controlled access to the LCC elevator shaft located?

3. What is the purpose of the LCC blast door?

4. What part of the LCC contains all of the equipment required for a missile combat crew to monitor and operate the weapon system?

5. What is the purpose of the ACP LCC?

### 010. Description of the launch facility

1. What keeps ground water from accumulating within the launch tube and damaging the solid propellant motors?

2. How is vertical movement of the launcher closure door prevented?

3. Why is approximately half of the upper-level LER shock-isolated?

4. Why are there two removable steel hatches in the roof of the LSB?

5. What area of the LF does the IZ security system monitor?

6. What is the purpose of the vibration-sensitive transducers in the IZ security system?

7. What is the purpose of the service area on an LF?

## Answers to Self-Test Questions

### 005

1. Deterrence of aggression through the threat of massive retaliation. Deter adversaries from employing WMD against our deployed forces. Deter nations from supporting or sponsoring terrorist organizations that may employ WMD in terrorist attack against our nation. Prevent potential adversaries from taking aggressive actions that threaten our national security interests, allies, partners, or friends.
2. The President of the United States.
3. AFGSC.
4. Rapid reaction, thermonuclear striking power, high accuracy, low vulnerability to attack, and high in-commission rate.
5. Rapid reaction.
6. Low vulnerability.
7. High in-commission rate.

### 006

1. Arrangement or placement of the various components that make up the weapon system.
2. Two.
3. A flight.
4. Five.
5. All LFs in its squadron.

### 007

1. Six-point-star hollow core.
2. Through commands issued by the guidance set to the NCUs, which move the four movable nozzles.
3. By molded plastic, Buna-N-rubber, mastic insulation, and high-density graphite parts.
4. Combination six-point-star-and-round hollow core with a star at the forward end.
5. Signals from the MGS command shaped charges to blow the ports open at thrust termination to vent motor chamber pressure and create a momentary negative thrust causing the third stage to drop away from the vehicle.
6. RV, penetration aids, cabling, and associated components.
7. Chaff, two chaff dispensers mounted on the rear face of the payload support bulkhead, each containing a chaff payload.
8. (1) MGC.
   (2) MGSC.
   (3) GSP.
   (4) PDU.
   (5) Battery assembly.
   (6) SRAM battery.
9. By the eleven rockets located in the PSRE.
10. To prevent incorrect mating of the fill valves to the oxidizer and fuel storage tanks.

### 008

1. (1) f.
   (2) e.
   (3) a.
   (4) c.
   (5) c.
   (6) b.

**009**

1. The Wing 1 MAF contains all of the support equipment and ECS equipment topside, whereas this equipment is located in an underground structure at Wing 3 or 5 MAF.
2. At the SCC.
3. It can withstand nuclear blast overpressure, provide an environmental seal, and shield the LCC from an electromagnetic pulse.
4. Acoustical enclosure.
5. Reports directly to the WCP and serves as backup should anything happen to the WCP.

**010**

1. A sump pump, in a pit at the bottom of the launch tube.
2. By its sheer weight of 110 tons and mated beveled edges on the closure sides and launcher roof.
3. To prevent the launch-critical equipment from ground shock damage produced by a nuclear blast.
4. They permit the removal and emplacement of the brine chiller unit and diesel generator.
5. The launch tube below ground level and the entrances to the launcher.
6. Detect attempts to tunnel into the launcher.
7. Maintenance and support vehicle maneuvering and parking.

**Complete the unit review exercises before going to the next unit.**

## Unit Review Exercises

**Note to Student:** Consider all choices carefully, select the *best* answer to each question, and *circle* the corresponding letter. When you have completed all unit review exercises, transfer your answers to the Field-Scoring Answer Sheet.

**Do not return your answer sheet to AFCDA.**

6. (005) What is the name of the period in world history that began at the end of World War II and lasted until the collapse of the Soviet Union?
   a. Cold War.
   b. Progressive Era.
   c. Information Age.
   d. Nuclear Arms Race.

7. (005) Which statement best explains the authority to launch intercontinental ballistic missiles (ICBM)?
   a. Air Force Global Strike Command (AFGSC) has the authority to launch a missile attack, but the President has the means of delivery.
   b. The President has the authority to launch a missile attack as well as controlling the means of delivery.
   c. AFGSC has the authority to launch a missile attack as well as controlling the means of delivery.
   d. The President has the authority to launch a missile attack, but AFGSC has the means of delivery.

8. (005) Remove-and-replace maintenance performed at the launch facility (LF) and launch control center (LCC) minimizes the intercontinental ballistic missile (ICBM) weapon system downtime and contributes to what strategic characteristic?
   a. Rapid reaction.
   b. Low vulnerability.
   c. High in-commission rate.
   d. Thermonuclear striking power.

9. (006) What combination of launch control centers (LCC) and launch facilities make up one missile flight?
   a. Ten LCCs; fifty launch facilities.
   b. Five LCCs; ten launch facilities.
   c. One LCC; fifty launch facilities.
   d. One LCC; ten launch facilities.

10. (006) How many launch facilities can a launch control center (LCC) control?
    a. Only those in its flight.
    b. All those in its squadron.
    c. Only those in its group.
    d. All those in its wing.

11. (007) The necessary thrust to launch a Minuteman III missile into a prescribed trajectory is provided by a
    a. four-stage solid-propellant booster.
    b. four-stage liquid-propellant booster.
    c. three-stage solid-propellant booster.
    d. three-stage liquid-propellant booster.

12. (007) What is used to drive the exhaust gas generator in the Minuteman III *second*-stage motor in order to accomplish missile roll?
    a. Thrust vector control system.
    b. Solid fuel exhaust gasses.
    c. Pressurized liquid.
    d. Liquid propellant.

13. (007) Which components aerodynamically join the Minuteman III motor stages and provide stage separation?
    a. Aluminum alloy interstages.
    b. Aluminum alloy coupling belts.
    c. High-strength fiberglass interstages.
    d. High-strength fiberglass coupling belts.

14. (007) The re-entry system (RS) shroud assembly is separated by a rocket motor located in the
    a. aft shroud.
    b. forward shroud.
    c. chaff dispensers.
    d. deployment module.

15. (007) What component in the missile guidance set (MGS) provides reports of missile and ground equipment status during ground operations?
    a. Power distribution unit (PDU).
    b. Missile guidance computer (MGC).
    c. Missile guidance set control (MGSC).
    d. Gyro-stabilized inertial platform (GSP).

16. (007) What feature prevents *incorrect* mating of the fill valves to the propulsion system rocket engine (PSRE) oxidizer and fuel storage tanks?
    a. Differences in sizes of each tank.
    b. Similarities in sizes of both tanks.
    c. Difference in the fill and drain fittings on each storage tank.
    d. Similarities in the fill and drain fittings on each storage tank.

17. (008) What area/facilities would you find in the missile support area?
    a. Weapons storage area, missile transfer building, and proofload test facility.
    b. Weapons storage area, missile transfer building, and security forces building.
    c. Transient storage area, maintenance facility building, and wing command post.
    d. Transient storage area, maintenance facility building, and vehicle maintenance sections.

18. (008) The *primary* method used for shipping missile downstages from depot to the missile transfer building is by
    a. road or highway in a missile transporter.
    b. air in a suitably equipped aircraft.
    c. rail in a ballistic missile trailer.
    d. rail in a payload transporter.

19. (008) Which facility is used to determine whether or not equipment is safe to use within designed load capacities?
    a. Maintenance facility building.
    b. Missile transfer building.
    c. Weapon storage area.
    d. Proofload test facility.

20. (009) What is the primary mission of a missile alert facility (MAF)?
    a. Housing the flight security controller.
    b. Controlling launch facilities in other flights.
    c. Housing the missile combat crew (MCC) officers.
    d. Providing a service area for parking tractor-trailers.

21. (009) If personnel are requesting access to the launch control center (LCC), the
    a. security control center (SCC) must contact the wing commander to authorize all personnel.
    b. LCC must contact the wing commander to authorize all personnel.
    c. SCC must positively identify and authorize all personnel.
    d. LCC must positively identify and authorize all personnel.

22. (009) All air that enters the missile alert facility (MAF) clean room must pass through a
    a. blast valve.
    b. particulate air filter.
    c. regeneration oxygen unit.
    d. chemical, biological, radiological (CBR) filter.

23. (010) How is vertical movement of the launcher closure door prevented?
    a. Door lock pin assembly.
    b. Ballistic actuator cables.
    c. Debris collection system springs.
    d. Mated beveled edges and weight.

24. (010) What design feature permits limited motion between the launch tube and equipment room without danger of major structural damage?
    a. Shock loops.
    b. Shock isolated floor.
    c. Six-to eight-inch rattle space.
    d. Mechanical suspension system.

25. (010) What component is lowered to gain access to the upper-level equipment room?
    a. Primary door.
    b. Secondary door.
    c. Launcher closure.
    d. Security pit vault door.

**Please read the unit menu for unit 3 and continue ➔**

# Student Notes

# Unit 3. Maintenance Management

**3–1. Missile maintenance organizational structure ..... 3–1**
011. Air Force Global Strike Command ..... 3–1
012. 20th Air Force ..... 3–3
013. Intercontinental ballistic missile wing ..... 3–5
014. Intercontinental ballistic missile group ..... 3–6
015. Maintenance squadron ..... 3–7
016. Missile maintenance squadron and contracted functions ..... 3–11
017. Related intercontinental ballistic missile organizations ..... 3–14
**3–2. General and specific responsibilities ..... 3–18**
018. General responsibilities ..... 3–18
019. Specific responsibilities ..... 3–19

As a missile and space maintenance journeyman, you have an important role in the success of the Air Force mission. While preserving the peace and security of the United States is a very broad element of this mission, you should make a conscious connection between your "wrench turning" and the peace and security you enjoy as an American. You work in a proud maintenance organization that has an ongoing mission of keeping missiles on alert. In this unit, you will learn the organization and responsibilities of the ICBM maintenance organizations and related units.

You fit in somewhere within a vast maintenance organization of several hundred people. As you begin to understand the responsibilities, functions, and structure of the organization, you will grasp the purposes and goals of the people you work for and with. In the following lessons, you will learn about the different organizations in the ICBM world. We will start at the top of the organization with the AFGSC and work our way down to the individual maintenance technician.

## 3–1. Missile maintenance organizational structure

Each level within a chain of command has its own functions and responsibilities. It is certainly no difference for the chain of command within AFGSC and its subordinate organizations. In this section, we will examine the organizational structure of AFGSC, 20th Air Force (AF), the ICBM wings and groups, as well as the squadrons responsible for ICBM maintenance.

### 011. Air Force Global Strike Command

As an Air Force member, it is vital that you know and understand your chain of command. Looking at your chain of command will help you understand where you fit in the organization and hopefully define what your own roles and responsibilities are in order to effectively accomplish your duties. Within this lesson, we will look at the mission and organization of AFGSC. Within the two lessons that follow, we will look at 20 AF as well as the different ICBM missile wings and groups.

#### Origins

AFGSC was activated on 7 August 2009, in order to consolidate all Air Force nuclear mission activities under one operational chain of command. AFGSC is a major command (MAJCOM), headquartered at Barksdale AFB, Louisiana, and is directly subordinate to Headquarters, Air Force (HAF). ICBM forces were merged into AFGSC effective 1 December 2009, and the Air Force long-range bomber assets were incorporated 1 February 2010.

## Mission

The mission of AFGSC is to develop and provide combat-ready forces for nuclear deterrence and global strike operations to support the President of the United States and combatant commanders. As the mission statement defines, AFGSC assets are poised to conduct strike operations anywhere on the globe, using land-based ICBM forces, as well as long-range bombers, such as the B-52 and B-2 bombers. AFGSC's mission has three specific areas of focus:

- Safety.
- Security.
- Credibility.

### *Safety*

The safety of our nuclear assets is critical to AFGSC's mission. As a technician, your actions could cause catastrophic failure if safety is compromised in any facet of your duties. AFGSC values safety in all things large and small. AFGSC maintains an aggressive inspection tempo to focus on nuclear safety and task safety.

### *Security*

The security of our nuclear assets is just as important as safety. Security forces Airmen are not the only ones responsible for security; we all are. As a missile field technician, you will have a direct impact on the security of our nuclear weapon system by following proper security procedures as outlined in your technical orders. Being aware and remaining vigilant will enhance security.

### *Credibility*

Credibility is a prime concern for AFGSC. This MAJCOM is entrusted with two-thirds of the nation's nuclear triad: land-based ICBMs and long-range bombers. As such, the American people must have faith that these weapons are properly secured and maintained in a safe manner. As a missile field technician, your day-to-day actions reflect the pride and precision that needs to be delivered to ensure public support. A false step can damage the credibility of AFGSC, as well as the Air Force, and the United States as a whole. For us to continue this mission, the American people must have confidence that we can do it safely and securely.

## Organization

AFGSC is comprised of the 20 AF and the 8 AF, which are both numbered Air Force (NAF) headquarters (HQ). NAFs report directly to a MAJCOM and are usually not structured to perform operational or war fighting missions. A NAF is often oriented to a specific geographic region and is assigned wings, groups, and squadrons.

There are also subordinate units directly reportable to AFGSC that do not fall under either the 20 AF or the 8 AF; these include the 576th Flight Test Squadron (FLTS) and the missile engineer squadron (MES). Refer to the organizational chart in figure 3–1.

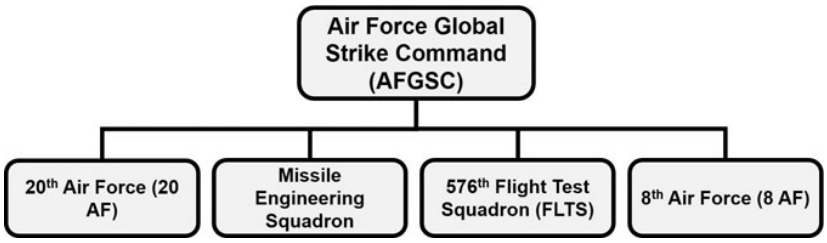


**Figure 3–1. Air Force Global Strike Command organization.**

The 8 AF's HQ, also located at Barksdale AFB, Louisiana, is comprised of three bomb wings. 8 AF plans and executes nuclear deterrence and global strike operations through the use of long-range

bombers. The 8 AF units operate from Barksdale AFB, Louisiana, Minot AFB, North Dakota, and Whiteman AFB, Missouri. As a missile and space facilities journeyman, it is unlikely you will be assigned to an 8 AF unit, so the focus of the next lesson will shift to 20 AF.

## 012. 20th Air Force

The 20 AF HQ is located at F.E. Warren AFB, Wyoming. The 20 AF is America's ICBM team and provides the front-line deterrence against any threat to the United States. The 20th AF carries out its mission through a team of approximately 15,000 Airman and civilians based at three operational missile units—Malmstrom AFB, Minot AFB, and F.E. Warren AFB. As a missile and space electronic maintenance journeyman, you are likely beginning your full-time maintenance career at one of these missile units.

### Mission

The 20 AF is unique in that it supports dual missions, one to AFGSC and the other to United States Strategic Command (USSTRATCOM). The 20 AF is responsible to AFGSC to maintain and operate the Air Force's ICBM forces. Its mission is to prepare the nation's ICBM force to execute—*Safe—Secure–Effective* nuclear strike operations and support worldwide combatant commander (COCOM) requirements. When ICBMs are required to support real world missions, the 20th AF reports directly to USSTRATCOM as Task Force 214 to provide on-alert, combat ready ICBMs to the President and the Commander, USSTRATCOM. This exchange of roles may happen several times a day depending on the mission. For example, on a particular day, you have maintenance you need to do at an LF; meanwhile, somewhere out in the Pacific Ocean, a navy nuclear sub is positioned in a secure location to react to any potential crisis in that region. As you go to the field, the MCC will monitor your site access as part of their AFGSC role in maintaining the weapon system. Within that same day, the MCC may be tasked with re-targeting a specific LF asset to cover the region the submarine was monitoring because the ship was being directed to another location. In this instance, the MCC is providing real world alert operations to support national security objectives under the direction of USSTRATCOM.

### Organization and responsibilities

The 20 AF command section consists of several divisions (fig. 3–2). Since ICBM maintenance falls under the 20 AF Logistics Division, we will focus our study there. The logistics division consists of the command section, facilities, missile maintenance, electrical, communications, ICBM readiness, and support sections. As we go through the next few sections, remember that we are discussing evaluators that work at the 20 AF and *not* the local evaluators who perform your evaluations.

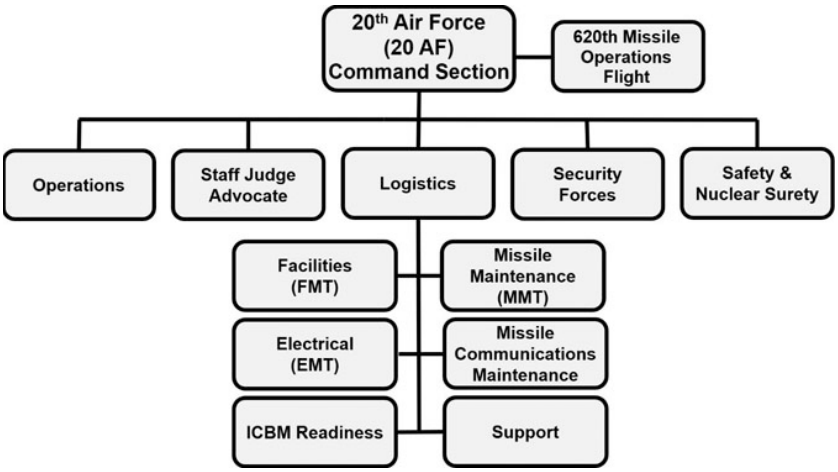


**Figure 3–2. 20th Air Force command section.**

### *Command section*

The 20 AF Director of Logistics has many responsibilities. One of the most important is the role of Team Chief for the missile potential hazard (MPH) system. An MPH is a condition in the missile complex that could potentially lead to a situation that could cause serious personnel injury or damage to equipment or facilities, which the unit cannot correct because of limitations in technical data, personnel, or hardware.

For example, during a brine chiller replacement in the LSB, two legs of the lifting sling break, the brine chiller falls and becomes wedged in the access door. There is no technical data to remedy this situation. This would be an MPH as it is an unusual situation; for example, it could cause damage to equipment. Further, there is no technical data to direct recovery.

The MPH system is designed to put a knowledgeable team of weapon system experts at the disposal of a unit in need of assistance. It is essentially an emergency response team for ICBM maintenance.

### *Missile maintenance*

The missile maintenance section consists of the 2M0X2 evaluators. Evaluators from the missile maintenance team (MMT), MAPS, and MHT fields are represented here. Their role is the same as the facilities section: to manage current and future ICBM modification programs, as well as evaluating and inspecting ICBM maintenance programs, facilities, equipment, vehicles, and technical orders assigned to missile maintenance units.

The 2M0X2 personnel also evaluate and inspect ICBM maintenance programs, facilities, equipment, vehicles, and technical orders assigned to missile maintenance units. They review QA reports from each wing and provide feedback as necessary. Other responsibilities include processing and validating requests from wings for depot assistance, technical order waivers, and technical order improvement recommendations and changes. In addition, they are subject-matter experts for issues presented by the units.

### *Facilities*

The facilities section is where the 2M0X3 personnel are primarily assigned as the facilities maintenance section (FMS), PREL, and HICS evaluators. Their role is similar to the electrical section as well.

### *Electrical*

The electrical flight contains the 2M0X1 evaluators from EMT and the ELAB. This section does their part in managing ICBM modification programs. Their role in the process is to perform design reviews to verify that new equipment operates as advertised. They also develop procedures and ensure the modification kits sent to the wings are complete.

### *Communications*

The communications section contains the 2M0X1 evaluators responsible for the missile communications maintenance programs and evaluations.

### *Support*

The support section serves as the focal point for all supply and technical order issues.

### *Intercontinental ballistic missile readiness*

The ICBM readiness section is the interface point between the missile wings and the 20 AF logistics section. When taskers or other data are transmitted to and from 20 AF, the ICBM readiness section ensures the validity and accuracy of the data before it is disseminated to the appropriate 20 AF section.

ICBM readiness is a key component of the command and control structure of 20 AF as well. They put together maintenance data analysis reports and generate weapon system metrics for the 20 AF and

USSTRATCOM leadership to ensure they have the right information to make decisions. Additionally, they keep leadership informed of modification and sustainment program completion rates.

Lastly, ICBM readiness ensures the maintenance efforts of the three missile wings are consistent with USSTRATCOM's operational orders for the strategic employment of the ICBM fleet. While under the logistics division of the 20th AF, this section has a pivotal role in the 20 AF structure as a whole.

#### *Technical orders*

The technical order library oversees the entire ICBM technical order process. Part of their responsibilities include managing the technical order improvement program. You will learn more about technical orders and the improvement process in the publications lesson.

#### *Supply*

The supply area is responsible for all ICBM supply-related issues. They monitor acquisition of parts affecting the mission capability of the weapon system. If a problem prevents an LCC or LF from putting missiles on alert, and the part needed to fix the problem is not available, the site's mission capability is affected. The supply area uses the mission capability (MICAP) program to put a high priority on getting the needed part and restoring the capability of the weapon system.

#### ***620th Missile Operations flight***

The 620th Missile Operations flight is a subdivision of 20 AF reporting directly to the commander. The flight commander also serves as the director of safety and nuclear surety for 20 AF. This flight operates the ICBM Center of Excellence (ICE), primarily responsible for providing evaluator and instructor training. This center ensures all ICBM instructors and evaluators receive high quality, standardized training necessary to perform their critical roles. During combat capability evaluations, ICE personnel augment their counterparts in the logistics and operations divisions to assist with the inspections.

## 013. Intercontinental ballistic missile wing

Now that we have discussed AFGSC and 20 AF, our next topic is the ICBM missile wing MW. As a 3-skill level technician studying this CDC to advance to your 5-skill level, this is where you come in. You've been assigned to one of the three MWs: Malmstrom AFB (341 MW), Minot AFB (91 MW), or F.E. Warren AFB (90 MW).

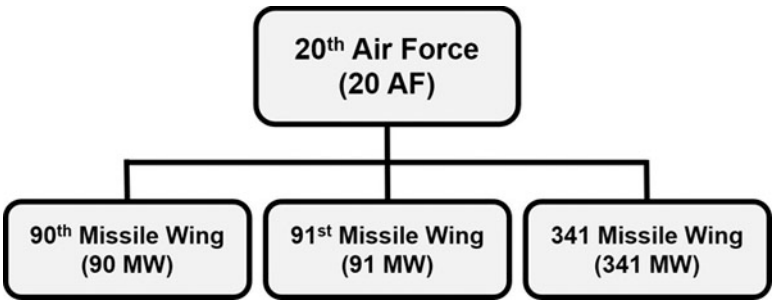


**Figure 3–3. Organization of missile wings under 20 AF.**

### Operational wing

A wing is a level of command below the NAF, i.e., 20 AF, and has an operations group and a related operational mission activity assigned to it. The wing is the first level of command where all of the subordinate levels of command are located on the same installation. For example, if you look at the NAF structure, you'll see that its subordinate wings are not located very close together. In the case of 20 AF, its subordinate wings are located in three different states: Montana, North Dakota, and Wyoming. However, at the wing level, each of the subordinate groups is located on that installation.

If you needed to see a finance technician in the mission support group, for instance, you would only need to travel a short distance to another part of the installation.

### Intercontinental ballistic missile wing mission

The mission of an ICBM missile wing is to provide combat ready forces for 20 AF and USSTRATCOM by safely operating, maintaining, and securing ICBMs. A typical ICBM missile wing is comprised of approximately 5,000 people in various organizations that mirror a typical Air Force wing structure. Each of the three ICBM missile wings is responsible for keeping 150 Minuteman III missiles on alert throughout their respective areas of responsibility.

#### *90th Missile Wing*

The 90 MW is located at F.E. Warren AFB, Wyoming. The wing is responsible for maintaining 150 Minuteman III missiles on alert located over a 12,600-square mile area throughout Wyoming, western Nebraska, and northern Colorado.

#### *91st Missile Wing*

The 91 MW is located at Minot AFB, North Dakota. The wing is responsible for maintaining 150 Minuteman III missiles on alert located in an 8,500-square mile area of North Dakota.

#### *341st Missile Wing*

The 341 MW is located at Malmstrom AFB, Montana. This wing is responsible for maintaining 150 Minuteman III missiles on alert throughout a 13,800-square mile area in Montana.

## 014. Intercontinental ballistic missile group

Reference figure 3–4. Now that you've learned about the three MWs under 20 AF, let's learn about ICBM missile groups. A typical ICBM missile wing is comprised of the following four groups:

- MXG.
- Operations group (OG).
- Mission support group (MSG).
- Medical group (MDG).

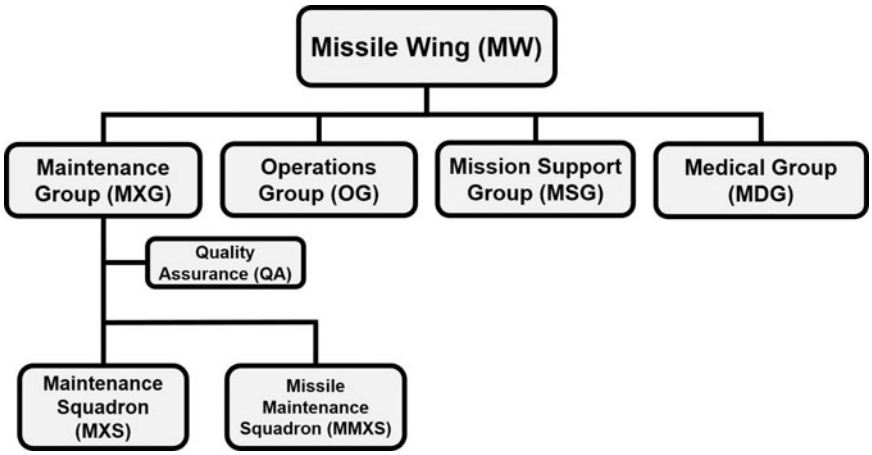


**Figure 3–4. Organization of groups within a missile wing.**

Each group plays different, but equally important roles in carrying out the wing's mission. Group commanders report directly to the wing commander. A group usually has two or more subordinate units and is a level of command directly below the wing. In this section, we will focus on the mission of the MXG and the OG.

### Maintenance group

An MXG in an ICBM missile wing contains two squadrons—the maintenance squadron (MXS), and the missile maintenance squadron (MMXS). The structure of both squadrons is broken down into flights and sections. The MXG's mission is to support the wing's mission of keeping missiles on alert with materiel, resources, and data. The majority of ICBM maintenance personnel will spend most of their career in the MXG. QA is a separate entity in the MXG. Administratively, this flight falls under the maintenance squadron for personnel administration, but operationally they work directly for the MXG/CC. QA evaluators are responsible for conducting evaluations on field technicians and Field Training Detachment instructors, and are the "eyes and ears" of the MXG/CC. QA is responsible for periodically reviewing technical orders, and also conducting technical reviews of time-compliance technical orders (TCTO) and other modifications that happen in the missile field. QA evaluators are chosen from among the best of each career field.

### Operations group

The OG consists of three squadrons. Each squadron is responsible to monitor and control 50 LFs and 5 MAFs. Other major responsibilities of the OG include the following:

- Provide MCC members whose main responsibility is to launch the missile and monitor the remote LFs.
- Provide facility managers and food service personnel (chefs) to maintain the MAF.
- Maintain a codes section that is the focal point for weapon system coding material and code handler training.

## 015. Maintenance squadron

The missions of the maintenance squadron are as follows:

- Maintain the status of all assigned LFs and MAFs.
- Coordinate training for missile maintenance personnel.
- Perform off-equipment maintenance on electrical, environmental, power generation, pneumatic and hydraulic systems associated with the ICBM weapon system.
- Centrally store, issue, inspect and repair ICBM support equipment, guidance systems and special purpose vehicles.
- Function as the centralized manager for manpower, mission support equipment, facilities, and long-range planning.

The MXS is broken down into three flights: maintenance operations flight, training flight, and resources flight, which are then broken down into sections (fig. 3–5).

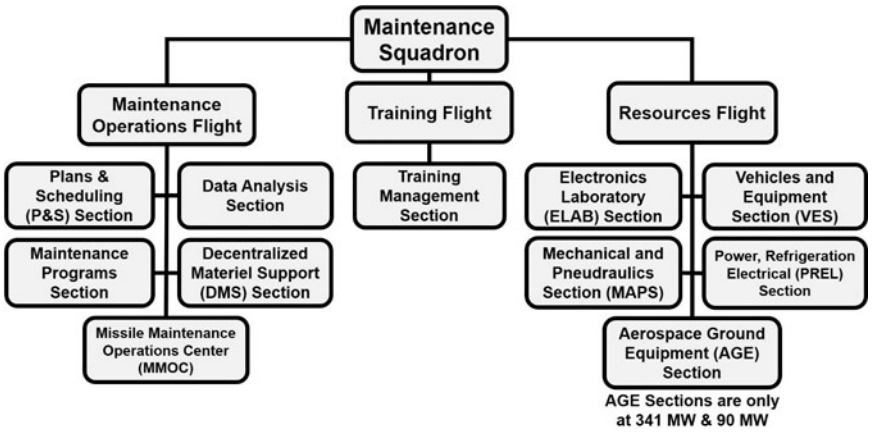


**Figure 3–5. Maintenance squadron organization.**

## Maintenance operations flight

The mission of the maintenance operations flight is to: maintain the status of all LFs and MAFs; provide the MXG/CC and MMXS/MXS supervision with key information to assist in determining maintenance requirements and priorities; act as the centralized manager of manpower, supply, mission support equipment (MSE), facilities and long-range plans for all areas of maintenance; and function as the resource advisor for appropriate responsibility center manager. Maintenance operations flight consists of:

- Plans and scheduling (P&S) section.
- MMOC.
- Maintenance programs section.
- Data analysis section.
- Decentralized materiel support (DMS) section.

### *Plans and scheduling section*

There are a lot of resources and coordination required to perform maintenance in the missile field and in the back shops. P&S serves as the focal point for the planning and scheduling of known maintenance requirements. The P&S section must coordinate with MSG for security forces support, the operations group, as well as many other sections in the MXG to create an accurate maintenance forecast. To accomplish this, it uses two distinct functions: planning and scheduling.

#### *Planning function*

The planning function includes all aspects of intermediate-range planning required to manage the MXG's workload. The planning function is accomplished by:

- Developing, coordinating, and publishing maintenance forecasts.
- Developing and managing the unit TCTO, master change log (MCL), modifications, and time change programs.
- Providing a monthly TCTO/MCL status to AFGSC logistics and missile engineering sections, the ICBM system program office engineering section, base missile engineering, and operations group standardization/evaluation section.
- Ensuring periodic maintenance scheduling includes all requirements and the date completed does not deviate by more than 60 days each year.

#### *Scheduling function*

The scheduling function includes all aspects of short-range planning required to manage the MXG's workload. The scheduling function is accomplished by the following:

- Developing, coordinating, and publishing the maintenance schedule, and holding daily meetings to coordinate the next day's actions.
- Coordinating the commitment of wing/group resources via the daily maintenance plan.
- Interfacing with missile engineering for depot assistance on real-property installed equipment (RPIE).

As you can see, the planning function projects what maintenance will be required in the coming weeks or months. The scheduling function typically plans the next day's activities.

### *Missile maintenance operations center*

MMOC serves as the focal point for priority 1 through 4 discrepancy reporting and is responsible for coordinating with appropriate agencies to ensure mission accomplishment and execution of the daily maintenance schedule. Maintenance technicians working on- or off-base coordinate all maintenance activities with the MMOC. MMOC operates 24 hours a day, seven days a week, monitoring the status

of each LF/MAF. Furthermore, MMOC tracks maintenance team arrival and departure times, and monitors their timelines to ensure they are not exceeded.

#### *Maintenance programs section*

This section serves as the single point of contact in the maintenance complex for the management of personnel authorizations, unit finances, facilities, and mission support equipment. The maintenance programs section prepares weapon system budgets and provides financial management to the maintenance organization. They also act as the single point of contact for overall guidance on mission support plans and support agreements.

#### *Data analysis section*

The data analysis section provides central oversight of all Integrated Maintenance Data System (IMDS) related functions within the MXG. This section consists of a combination of military personnel and contractors performing maintenance data functions. This section establishes and leads the data integrity team (DIT). The purpose of the DIT is to evaluate, isolate and eliminate documentation errors in IMDS. The data analysis section maintains a site file for each LF and MAF which must include an Air Force Technical Order (AFTO) Form 95, *Significant Historical Data*, an inventory sheet that tracks all serially-controlled items, and forms that track LF and MAF emergency storage battery data. The data analysis section provides a central collection point for all maintenance data forms.

#### *Decentralized materiel support section*

The DMS provides central oversight of all supply and support related functions within the MXG. The section can consist of Department of Defense (DOD) civilian, military, and/or contractor personnel. DMS is where all parts that are waiting to be installed at an LF or MAF are kept, or “binned.” This is where a technician will go on the morning of a dispatch to gather all of the items they’ll need to complete their assigned work orders for that day. DMS also orders and processes parts that are ordered in IMDS.

### Training flight

Now that you’re familiar with the maintenance operations flight, let’s take a look at the training flight. The training flight is responsible to conduct, direct, monitor, and schedule all training that is not managed by the FTD. They’re also tasked with monitoring metrics regarding technicians that are awaiting training. The training flight is made up of both civilians and military members, and is comprised of the training management section.

#### *Training management section*

The individuals in the training management section will provide you with most of the classroom training you’ll receive. As a newly assigned technician, you may already be scheduled for, or may have already received training from, training management. As the name implies, training management manages all unit training programs, and they also play a large part in the recurring technical training (RTT) that you and other field running technicians will receive every six months. The unit training manager (UTM), who is responsible for all training within the MXG, is also assigned to this section. Training management is responsible for managing the learning center’s resources and equipment. The learning center is where you will typically go to fulfill your ancillary training.

#### *Field training detachment*

The FTD is where technicians such as yourself will go once a team training slot becomes available. As we discussed early in unit one of this volume, the FTD falls under AETC, and is populated with experienced instructors who train technicians to be competent field runners. The instructors that teach Special Purpose Vehicle Operations (SPVO) courses also fall under the FTD. If you are chosen to be a crane operator, or the tractor-trailer driver for your PMT team, SPVO is where you will go to

receive the necessary training to operate these and other vehicles. Remember, the FTDs are *organizationally* located under AETC, but are *physically* located in your training flight.

### Resources flight

Resources flight is the largest flight in MXS. These personnel perform off-equipment maintenance on electrical, environmental, power generation, and hydraulic systems associated with the weapon system. They also provide limited on-site repair of LF and MAF subsystems. Resources flight personnel centrally store, issue, inspect, and repair ICBM support equipment and special purpose vehicles. Resources flight consists of:

- Electronics laboratory (ELAB) section.
- MAPS.
- PREL section.
- VES.
- Aerospace ground equipment (AGE) section (341 MW and 90 MW only).

#### *Electronics laboratory section*

The ELAB shop consists of 2M0X1 (EMT) personnel who inspect, troubleshoot, and repair missile electronic and communication components and test equipment. They prepare electronic drawers for dispatch to LFs and MAFs and track spare missile guidance sets by serial number and part number. ELAB maintains a 24-hour per day, seven-days per week maintenance capability.

#### *Mechanical and pneudraulics section*

MAPS consists of 2M0X2 (MMT) personnel who inspect, troubleshoot, and repair hoists, mechanical support equipment, pneumatic and hydraulic components, support equipment, and special purpose vehicles. MAPS conducts tests to ensure that weight-bearing items, such as lifting slings, will safely support their rated weight loads. They are responsible for operating and maintaining the proofload test facility.

#### *Power, refrigeration, and electrical laboratory*

PREL consists of 2M0X3 personnel who inspect, troubleshoot and repair weapon system ECS, power systems, electrical systems, support equipment, test equipment and special purpose vehicles. PREL personnel also prepare and process LF and LCC emergency storage batteries, and prepare a variety of the chemicals that are used in the missile field.

#### *Vehicles and equipment section*

VES manages assigned vehicles and equipment to meet scheduled and unscheduled missile maintenance requirements. In managing vehicles, VES is responsible to ensure maximum availability of safe and reliable, general and special purpose vehicles and cranes to meet mission requirements. If there are vehicle discrepancies, VES must coordinate with the logistics readiness squadron to correct them and complete inspection requirements.

In managing equipment, VES must maintain a record of inspections and calibration of equipment owned by the unit and coordinate with the precision measurement equipment laboratory (PMEL) on other items requiring calibration. Accountability is vital, so VES personnel use load lists when checking items out to a maintenance team and then inspect the load for completeness upon return from a dispatch. As an equipment user, it is also vital you inform VES personnel of any problems noted with equipment you used.

#### *Aerospace ground equipment section*

This section tracks and manages AGE inspection and maintenance requirements for the wing. Agencies throughout the wing have equipment items, such as portable lighting, portable heaters, etc.,

that AGE maintains and inspects. AGE falls under the maintenance groups at the 341 MW and 90 MW, and under the 5th Bomb Wing at the 91 MW.

## 016. Missile maintenance squadron and contracted functions

Now that you're familiar with the many facets of the MXS, let's take a look at the MMXS. The mission of the MMXS is to maintain the launch readiness of the 150 LFs and 15 MAFs that comprise the missile field. The flights in MMXS have different roles, with each one covering a specific portion of the weapon system to ensure ICBMs are on-alert at all times. MMXS consists of Facilities flight and Generation flight (fig. 3–6).

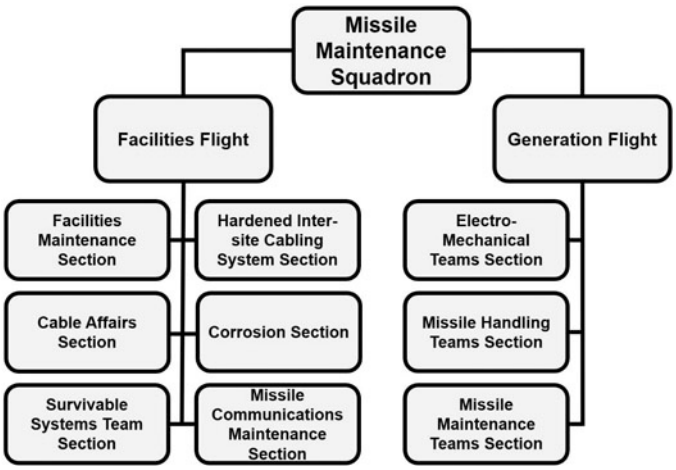


**Figure 3–6. Missile maintenance squadron organization.**

### Facilities flight

Facilities flight performs actions required to maintain LFs and MAFs in optimal condition. The flight ensures operational readiness by troubleshooting and repairing power and environmental control systems, as well as performing periodic inspections, corrosion inspections, and other preventative maintenance. Facilities flight consists of the following sections:

- FMS.
- HICS.
- SST section.
- Cable affairs section.
- Corrosion control section.
- Missile communications maintenance (MCM) section.

#### *Facilities maintenance section*

FMS consists of 2M0X3 personnel just like yourself who are responsible for performing preventive maintenance in accordance with the scheduled periodic maintenance program, as well as performing on-site repair of LF and MAF power and ECS. This is likely your first stop in the maintenance community as a 2M0X3. FMS is the core work center for the career field and your technical training prepares you for tasks in this section.

FMS also performs shotgun custodian duties for the missile complex. Installed on each LF are two shotguns for added security when the secondary door is lowered and personnel are in the launcher. These weapons must be inspected and inventoried annually with the help of combat arms personnel. FMS appoints a shotgun custodian to ensure these weapons are properly maintained and 100 percent

accountable at all times. Two major function of FMS are periodic maintenance and facilities maintenance.

### *Periodic maintenance*

One of FMS' key responsibilities is the periodic maintenance program. There are periodic inspection requirements on each LF and MAF that must be performed on an annual, biennial, and triennial basis. Periodic maintenance is important to prevent future problems and ensure the weapon system is operating in optimal condition. Periodic maintenance teams consist of at least five individuals—a team chief and four technicians—who dispatch regularly together.

### *Facilities maintenance*

FMS also performs repair actions on the LFs and MAFs. The primary job of FMTs is to respond to alarm conditions in the power, ECS, wastewater, and fuel systems, as well as to perform other priority maintenance. FMTs also perform on site replacements on major items, such as the brine chiller units and diesel electric units. An FMT team typically consists of two individuals: a team chief and a team member.

### ***Corrosion control section***

Corrosion control personnel perform corrosion treatment and repair of most items that would need corrosion control in the maintenance complex. They dispatch to the missile field and perform preventative corrosion treatment on the LFs and MAFs, but also treat support equipment, special purpose vehicles, and some facilities. A corrosion control team consists of four civilian personnel.

### ***Hardened inter-site cabling system section***

Connecting all of the LFs together with other LFs and their parent MAFs is an extensive network of underground cables that must be maintained. HICS personnel inspect, troubleshoot, and repair buried cables and spliced cable assemblies, as well as the cable air dryers that keep moisture from entering the system. HICS personnel operate heavy machinery necessary to excavate HICS cable sections, as well as to correct erosion issues along the cable path.

HICS personnel also maintain a cable yard. This cable yard contains all of the spare cables that could be used in the missile complex. This cable is no longer manufactured, so they must be maintained as active cables with a pressuring system and periodic inspections. A HICS team consists of at least two 2M0X3 technicians, one of which is designated the team chief.

### ***Cable affairs section***

LFs and MAFs are spread out over thousands of square miles of land, and the Air Force does not own all of it. Buried HICS cables run through private land and cable affairs personnel are responsible to engage with landowners and utility companies that own or operate the areas the HICS cables traverse. Landowners must be notified in advance of any planned cable work on their property to prevent confrontations that could occur because of perceived trespassing. Railroads, utility companies, contractors, farm agencies, and highway and road departments must all contact cable affairs if any projects they plan might affect the HICS system. Cable affairs must contact these agencies at least every two years to ensure they understand their requirements. The cable affairs section consists of at least two 2M0X3 or trained civilian personnel.

### ***Survivable systems teams section***

The SST section maintains operational readiness of systems that provide LCC and LF hardness to enable the MCC to survive and operate through nuclear blast, shock, vibration, and thermal effects. SST is responsible for maintaining LCC blast valves, LCC blast doors, LCC/LF shock isolation systems, and operator chairs. An SST team typically consists of two to four 2M0X2 technicians.

### *Missile communications maintenance section*

The MCM section is a diverse section covering many duties that were formerly divided among three different communications squadron career fields. These personnel perform preventative maintenance, troubleshooting, and repair on nearly all of the communications infrastructure in the missile field. They perform maintenance on these systems onsite and also in the missile wing command post. When one of the secure lines that is used for voice communications from the LF to the LCC malfunctions, an MCM team will be dispatched to troubleshoot and repair it. An MCM team normally consists of at least two 2M0X1 personnel.

## Generation flight

The generation flight is responsible for maintaining assigned ICBM forces and generating missile sorties to alert status. This includes the transportation, removal, installation, and storage of Minuteman III boosters, reentry systems, and missile guidance sets. The generation flight personnel perform coding operations on the weapon system and troubleshoot and repair ICBM communications, security, electrical, and certain power systems. The generation flight consists of:

- EMT section.
- MHT section.
- MMT section.

### *Electro-mechanical maintenance teams section*

EMT performs electronic, security, and electrical system repair and troubleshooting, and coding of the weapon system. In addition, EMT performs repair actions on the emergency storage batteries while onsite, and troubleshooting and repair of all personnel access system components. An EMT team consists of at least two 2M0X1 personnel.

### *Missile handling teams section*

MHT personnel are responsible to remove, install, and transport the Minuteman III missile downstages. They are also responsible for the on-base storage of missiles. In addition, they operate the fleet of TEs and are the primary custodian of PACs. An MHT team consists of at least four 2M0X2 technicians.

### *Missile maintenance teams section*

MMT teams remove, install, and transport the aerospace vehicle equipment, such as the re-entry systems, missile guidance sets, and propulsion system rocket engines. MMT also performs maintenance on the missile umbilical, missile suspension system, and the launcher closure (LC) system. MMT always assists MHT in the removal and installation of the missile itself. An MMT team consists of at least five 2M0X2 technicians. Due to the critical nature and inherent danger involved in connecting, disconnecting, and hoisting the different portions of the missile, each technician is trained for only one position on the team. A technician must stay in that position unless they're specifically trained to perform in another. It goes without saying that MMT team integrity is critical. Generation flight leadership must approve of any MMT team member substitutions.

## Contracted functions

Within many organizations in the Air Force today, military members often work closely with civilian contractors. As a result, the Air Force and corporations have developed rules and regulations that govern how they will work with each other. Civilians have their own set of maintenance requirements that must be fulfilled. In this section, we will discuss those maintenance requirements and the role they have in managing ICBMs.

### *Technical order distribution office*

Technical orders are constantly changed and revised. As a maintenance technician, you rely on accurate technical orders to perform maintenance. If you're on a PMT, you will keep your technical orders in your trailer; if you're on an FMT, you will pick up your technical order kits each morning before you dispatch to the field. The technical order distribution office (TODO) function is tasked with managing the technical orders you use. As with other contracts, this one is command-managed. The TODO will establish and maintain technical order accounts and subaccounts at the request of workcenter supervisors.

### *Precision measurement equipment laboratory*

Unlike the previous contracts, the PMEL is a wing-level managed contract, which is why it does not appear in MMXS organization in figure 3–6, previously shown. PMEL performs maintenance, calibration, and certification of test equipment. We rely on the test equipment we use to provide accurate readings. Torque wrenches must tighten fasteners to the torque that they specify. In order to ensure that meters read accurately and torque wrenches provide the correct amount of torque, these items must be periodically calibrated. For example, a PMEL technician would use a known reference voltage; let's say 120 volts of alternating current (VAC). The PMEL technician ensures that a meter being calibrated reads within a small margin of error of the 120 VAC reference voltage. If the meter does not show the correct reading, the technician will attempt to calibrate it. If it cannot be calibrated, or brought within the proper tolerance, the meter is removed from service.

## 017. Related intercontinental ballistic missile organizations

There are a few ICBM organizations and units, outside of the ones discussed earlier, with missions and responsibilities that support the ICBM mission. As an ICBM maintenance technician, you should be knowledgeable of these organizations and their role in the ICBM community. It is very possible you may be assigned to one of these units in your career. In this lesson, you will learn about these organizations and their missions.

### 576th Flight Test Squadron

The 576 FLTS provides overall day-to-day management of AFGSC's force development and evaluation program. Located at Vandenberg AFB, California, the 576 FLTS plans and performs ground, flight, and space system tests in a simulated operational environment and collects, analyzes, and reports performance accuracy, reliability, aging, and surveillance data. If problems occur during an evaluation, the 576 FLTS assesses the problem and reports that information as well.

The 576 FLTS is primarily responsible for operational test launches (OTL) and simulated electronic launches of Minuteman III (SELM) missiles. During an OTL, squadron personnel are tasked with assembling all test components, then testing and launching unarmed ICBMs. This includes installing telemetry equipment and command-destruct packages on test missiles. Once an ICBM is launched from Vandenberg AFB, the 576 FLTS refurbishes the missile site to be used again. A SEL test is conducted on ICBMs in their deployed LFs at their operational units without actually launching the missile. The tests stop before first stage ignition with 576 FLTS personnel overseeing the process. During an OTL, a missile is brought from one of the missile wings and is actually launched. During a SELM, the missile stays at its LF and undergoes a simulated launch.

### Technical engineering

There is a technical engineering (TE) flight at each of the missile wings, but they do not belong to the MXG. They belong to the 526 ICBM Systems Group (ICBMSG) at Hill Air Force Base, Utah, and are a part of Air Force Materiel Command (AFMC). TE provides the technical expertise necessary to resolve abnormal weapon system problems. This is the team you will turn to when an issue arises that

is outside of the normal scope of your shop. They review data, conduct studies, and develop changes required to improve the weapon system. TE flight personnel also accomplish the following:

- Maintain the capability to perform maintenance.
- Maintain qualifications on LF entry, exit, and emergency operations; ground, missile, and nuclear safety requirements; security requirements, missile potential hazard procedures, emergency war order support; critical component control; and other appropriate tasks.
- May use all weapon system technical orders, including depot level technical orders, contractor data, depot instructions, CEMs, as built drawings, and other engineering data.
- Will only direct maintenance teams to use procedures that are in technical orders or CEMs.
- Can direct qualified technicians to take readings from approved test points using approved test equipment, while being referenced from technical orders, CEMs, schematics, or diagrams.

### 381st Training Group

The 381st Training Group (TRG) is an AETC organization located at Vandenberg AFB, California. The three squadrons that make up the group provide qualification training for ALCM maintenance, ICBM missile maintenance, space operations, and ICBM missile operations.

While three squadrons make up the 381 TRG, only the 532d Training Squadron (TRS) is responsible for maintenance training. When you attended technical training at Vandenberg AFB, you were assigned to the 532 TRS. Qualified instructors provide students with thorough classroom and realistic hands-on training using a wide range of trainers, including a Minuteman III LF trainer. Graduates from these courses receive assignments to AFGSC in either ICBM maintenance for 20 AF or cruise missile maintenance in 8 AF.

In addition to the entry-level courses, the 532 TRS conducts advanced training for experienced maintainers who have already been in the field. The verification and checkout equipment (VACE) and TE courses are for personnel hand-selected to perform specialized duties.

The ALCM that your 2M0X1B comrades work on must be tested to ensure that they perform as expected while in flight. Specialized equipment is required to simulate an in-flight environment as well as gather data from the ALCM to ensure that it is functioning properly. VACE course instructors provide the training necessary to operate this specialized test equipment.

As stated earlier, TEs troubleshoot abnormal problems with the weapon system. The TE course instructors at the 532 TRS provide advanced troubleshooting knowledge and techniques. To accomplish this, students are provided with experience on electronics principles and circuit building, as well as extensive knowledge of how individual circuits in the weapon system perform their functions. Students in the TE course also learn how to interpret complicated technical manuals and contractor data.

The squadron also has the ICBM Maintenance Officer Course (IMOC). Maintenance officers in the 21M career field spend time learning about each missile maintenance discipline to prepare them to be well-rounded senior leaders of tomorrow.

Lastly, the CDC authors are assigned to the 532 TRS. They are responsible for developing and maintaining CDCs for the 2M0X1A/B, 2M0X2, and 2M0X3 career fields. Enlisted personnel use CDCs to upgrade to higher skill levels; the CDC information is also used to develop SKTs used for promotion. CDCs satisfy the knowledge portion of your upgrade training; consequently, they do not contain detailed information about how to perform certain tasks.

## Self-Test Questions

**After you complete these questions, you may check your answers at the end of the unit.**

### 011. Air Force Global Strike Command

1. Why was AFGSC activated?

2. How are long-range bombers and land-based ICBMs used to fulfill the mission of AFGSC?

3. What numbered Air Forces comprise AFGSC?

### 012. 20th Air Force

1. What is the mission of 20 AF?

2. What kind of limitations could prevent a missile unit from resolving a situation, leading to an MPH?

3. What section of the 20 AF Logistics Division would 2M0X3 personnel primarily be assigned to?

4. What is the purpose of the 20 AF support using the MICAP program?

### 013. Intercontinental ballistic missile wing

1. What is the mission of the ICBM missile wing?

2. What is each ICBM missile wing responsible for?

### 014. Intercontinental ballistic missile group

1. List the groups the ICBM missile wing is comprised of.

2. What is the maintenance group’s mission?

3. What are QA evaluators responsible for conducting technical reviews on?

4. What is the responsibility of MCC members?

## 015. Maintenance squadron

1. Match the section in column B with their functions in Column A. Items in Column B may be used once or not at all.

| *Column A* | *Column B* |
|---|---|
| ____ (1) Develops, coordinates, and publishes a maintenance forecast. | a. MMOC. |
| ____ (2) Monitors the status of each LF and MAF. | b. Plans and scheduling. |
| ____ (3) Provides central oversight of all supply and support related functions within the MXG. | c. Training management. |
| ____ (4) Manages the learning center resources and equipment. | d. FTD. |
| ____ (5) Inspect, troubleshoots, and repairs hoists, mechanical support equipment, support equipment, and special purpose vehicles. | e. MAPS. |
| ____ (6) Prepares and processes LF and LCC emergency storage batteries. | f. PREL. |
| ____ (7) Uses load lists to checkout items to maintenance teams. | g. VES. |
| | h. AGE. |
| | i. DMS. |

## 016. Missile maintenance squadron and contracted functions

1. Match the section in column B with their functions in Column A. Some items in Column B may be used only once.

| *Column A* | *Column B* |
|---|---|
| ____ (1) Performs on-site repair of LF/MAF power and ECS. | a. FMT. |
| ____ (2) Maintains a cable yard. | b. HICS. |
| ____ (3) Responsible for maintaining LCC blast valves, LCC blast doors, LCC/LF shock isolation systems, and operator chairs. | c. EMT. |
| ____ (4) Responsible for performing preventative maintenance, troubleshooting, and repair on nearly all of the communications infrastructure. | d. MHT. |
| ____ (5) Performs repair actions on emergency storage batteries onsite. | e. Missile Maintenance Team. |
| ____ (6) Removes, installs, and transports Minuteman III missile downstages. | f. SST. |
| ____ (7) Removes, installs, and transports aerospace vehicle equipment. | g. MCM |

2. What action does PMEL perform to ensure items like multimeters and torque wrenches provide accurate readings and torque values?

### 017. Related intercontinental ballistic missile organizations

1. What are 576 FLTS personnel tasked with during an OTL?

2. What does TE provide?

3. What qualification training does the 381 TRG provide?

## 3–2. General and specific responsibilities

The US government and the American people have entrusted you and your organization with the awesome responsibility of maintaining the nation's ICBM fleet. There are special responsibilities that accompany this task that you and your management team must understand and comply. This section focuses on some general responsibilities that all personnel who work in this business must know and understand. Additionally, this section includes information on some specific responsibilities related to different duty titles you or your leadership may hold.

### 018. General responsibilities

All maintenance actions and management efforts must be directed towards maximum availability of ICBMs in support of USSTRATCOM requirements and directives. All maintenance supervisors are mandated to use all resources in the most effective and efficient way with emphasis on safety and welfare of the technician. Maintenance activities will ensure quality maintenance and absolute compliance with technical data, safety, and security standards.

#### Supervision of maintenance

The maintenance mission is *missile and equipment readiness.* All levels of your supervision place emphasis on safety, security, quality, and timeliness of the maintenance you perform. Your maintenance skills ensure that the equipment and the fleet of ICBMs you maintain are safe, serviceable, and properly configured to meet mission needs.

#### Preventive Maintenance

The purpose behind everything you do is to sustain the capability to support the mission. Have you ever heard the phrase "a stitch in time saves nine"? It is an old proverb, and refers to the sails of a boat. It was much easier to periodically stitch up a tear in a sail than it was to wait until the wind tore a large hole in the sail. This also applies to our ICBM weapon system. Your primary focus should always be to put maximum effort toward preventive maintenance rather than corrective maintenance. Keep this in mind while you are performing maintenance on an MAF, LF, or on the support base.

#### Find-and-fix maintenance

One of the most effective ways we can be proactive rather than reactive is to comply with the *Find and Fix concept.* While each maintenance team dispatches to an LF or an MAF for a specific purpose, they must still be attuned to their surroundings. If a technician discovers a discrepancy, and if it can be repaired within their timelines and capabilities, they should fix it on the spot. If a team's timeline does not allow it or a team is incapable of fixing it due to lack of qualifications, parts, or other circumstances, that team must ensure it is properly documented. Proper care of the weapon system is critical to successful mission accomplishment.

### Technical order usage

The use of approved technical data is mandatory when performing maintenance on the weapon system. There is even technical data for performing checkouts on some vehicles and equipment. It is for this reason that technicians need to always recommend corrections for deficiencies in technical data. You will find that as time goes on, you'll become very familiar with the tasks you perform. If you have to continually ask yourself "why are the steps in this task out of order?" or "why is this task missing a step?," use the opportunity to complete an Air Force Technical Order (AFTO) Form 22, *Technical Manual (TM) Change Recommendation and Reply*. Your actions will make the technical data more accurate for both you and other technicians who will use it.

### Safety

Safety should be at the forefront of maintenance planning and execution. The Air Force outlines these key factors when it comes to safety with the weapon system:

- Each unit is required to develop plans and supplements to outline the roles and responsibilities of maintenance personnel during missile or nuclear mishaps and disaster control situations.
- The MCC is in command of both the LF and MAF at all times. The MCC has full authority to stop any task before it begins or to terminate a task that's already been started.
- The maintenance team chief is responsible for safe operations on site and can also stop any task before it begins or terminate a task that's already been started.

Adequate rest is a prime concern for technicians driving long distances or working long hours in the maintenance complex. Crew rest requirements can be found in Air Force Manual (AFMAN) 21–200, *Munitions and Missile Maintenance Management.* Crew rest rules are established as follows:

- The official duty time (timeline starts) when personnel report for duty or start their standby period, if on call.
- The duty period ends when personnel either turn in all equipment and vehicles or release these items to another individual or team.
- The maximum duty period for dispatching personnel is 16 hours in any combination of on- or off-base duties.
- All personnel receive an uninterrupted 12-hour rest period upon completion of an off-base dispatch. Technicians who remain overnight at a MAF receive 10 hours of crew rest.

Remember, whether you're a technician on a PMT, an instructor in training flight, or a squadron commander, safety should always be at the forefront of your mind. ICBM maintainers put tens of thousands of miles behind the wheel of a range of different vehicles and work in many different and extreme weather conditions. If something doesn't seem right, call it out. Take a step back and review the procedure you're using or make a phone call to get clarification.

## 019. Specific responsibilities

Now that we have discussed general responsibilities that all technicians need to adhere to, let's talk about specific responsibilities. This lesson provides an overview of these responsibilities at each level within the MXG. Further, this lesson will help you understand how your leadership teams make their decisions. Keep in mind that as we go through this information, we won't be listing all requirements for all individuals. You can find a detailed listing of specific responsibilities for all levels in AFI 21–202, Volume 1, *Missile Maintenance Management.*

### Maintenance group commander

The MXG/CC is responsible for providing maximum warfighting capability to the wing commander by properly managing the maintenance complex. Some of these responsibilities include ensuring the following:

- Development of QA and training programs.
- Compliance with environmental requirements.
- A program is in place for corrosion control and detection on all equipment and facilities.
- Sections use IMDS to issue and receive equipment and vehicles.

### Maintenance group superintendent

The MXG/superintendent (MXG/SUPT) will ensure consistent maintenance practices according to technical data, ICBM weapon system safety rules (WSSR), and established management procedures throughout the group. In addition, the MXG/SUPT will perform the following roles:

- Serve as the technical advisor to the MXG/CC.
- Advise the MXG/CC on personnel, morale, and welfare issues.
- Serve as the MXG's focal point for enlisted manning.

### Squadron commanders

The squadron/CCs provide maximum warfighting capability to the MXG/CC. The squadron/CC is responsible for overall squadron management and mission accomplishment.

### Maintenance operations officer/superintendent

The MXS and MMXS each have their own maintenance operations officer (MOO) and superintendent. Collectively known as the squadron/MOO/SUPT, these individuals manage maintenance production and assigned resources to achieve maximum war fighting capability. Additionally, they are responsible for the following:

- Ensure flights have all required tools and equipment.
- Certify all newly assigned ICBM maintenance team chiefs.
- Periodically review unit production indicators, such as incomplete work orders, late dispatches, and technicians in training status.

### Flight commanders/flight chiefs

Flight commanders and flight chiefs are responsible for the overall management and supervision of personnel in the flight. This includes the overall planning and execution of all daily maintenance. In addition, the flight CC/flight chief will accomplish the following:

- Commit flight resources via the daily maintenance schedule.
- Ensure subordinate work centers effectively manage workloads.
- Ensure maintenance teams do not exceed established timelines.
- Establish a tool control program that prevents fraud, waste, abuse, and loss.
- Emphasize safety, security, technical order usage, and nuclear surety.

### Section officer-in-charge/noncommissioned officer-in-charge

The section officer-in-charge (OIC) and noncommissioned officer-in-charge (NCOIC) are

responsible to the flight CC/chief for the effective management, supervision, and training of assigned maintenance technicians. The section OIC/NCOIC must accomplish the following:

- Ensure 100 percent task coverage. This means there must be qualified technicians available to perform any task the work center is responsible to perform.
- Provide equipment load lists to VES for known maintenance dispatches.
- Notify MMOC and flight supervision of any change to availability of resources that were committed to the maintenance schedule.
- Ensure team chiefs and task supervisors keep MMOC informed of job status.
- Ensure personnel are current on ground, missile, explosive, and nuclear safety training; Air Force two-person concept; no-lone zone requirements; security requirements; PRP; and missile potential hazard requirements as applicable.
- Notify QA monthly of team structure and notify them in advance when using technicians that were not previously identified.
- Use the TBA database to verify teams are qualified to perform maintenance tasks.

### Task/site supervisors

The task/site supervisor ensures safe, secure, and reliable nuclear weapons/systems maintenance, large maintenance vehicle/crane operations and must be knowledgeable of the assigned maintenance tasks. In addition, the task/site supervisor will:

- Assist with developing and executing the maintenance schedule
- Recommend sub-standard performers to the section NCOIC for decertification and remedial training.
- Ensure maintenance technicians follow approved technical orders.

### Team chiefs

Team chiefs are responsible for work accomplished by the technicians they supervise onsite or on in-shop tasks. All team chiefs must possess a minimum of a seven-skill level; however, the MXG/CC (576 FLTS/CC at Vandenberg AFB) may waive this requirement if warranted. In addition, team chiefs will:

- Ensure checkout, inspection, safe operation and care of vehicles, equipment, tools, and parts.
- Review work residue for other work orders that can be accomplished during scheduled maintenance.
- Ensure vehicles for field dispatches have all necessary equipment to include emergency kits and survival kits.
- Ensure technical data is available and used to complete tasks.
- Comply with Environmental Protection Agency requirements.
- Comply with applicable ground, missile, explosive, and nuclear safety requirements; two-person concept and no-lone zone requirements; security requirements; the PRP; MPH procedures; and code handling requirements.

### Technicians

You will soon be operating at the technician level. The technician is responsible to the Team Chief or task supervisor to:

- Maintain, control, properly use, and care for assigned tools and equipment.
- Use technical data to accomplish tasks.
- Inspect the site or support equipment and fix or document any discrepancies.

- Ensure all items required to perform tasks are available.
- Perform checkout, inspection, safe operation, and care of vehicles.

## Self-Test Questions

**After you complete these questions, you may check your answers at the end of the unit.**

### 018. General responsibilities

1. What must a team or technician do if a discrepancy is discovered on the site and they have the time, but are not qualified to correct the discrepancy?

2. Who has the authority to prohibit the commencement and direct the termination of tasks on LFs?

3. When does a team's/technician's timeline officially start?

### 019. Specific responsibilities

1. Why is the MXG/CC responsible to ensure sections use IMDS?

2. Who serves as the technical advisor the MXG/CC?

3. Who certifies all newly assigned ICBM maintenance team chiefs?

4. Why must the section OIC/NCOIC ensure 100 percent task coverage?

5. What must team chiefs/task supervisors ensure is available and used?

6. What must a technician do with discrepancies discovered during an inspection of the site or support equipment?

## Answers to Self-Test Questions

**011**

1. To consolidate all Air Force nuclear mission activities under one operational chain of command.
2. Conduct strike operations anywhere on the globe.
3. The 20 AF and 8 AF.

**012**

1. To prepare the nation's ICBM force to execute safe, secure, and effective nuclear strike operations and support worldwide COCOM requirements.
2. Technical data, personnel, or hardware.
3. Facilities.
4. To put a high priority on getting the needed part and restoring the capability of the weapon system.

**013**

1. To provide combat ready forces for 20 AF and USSTRATCOM by safely operating, maintaining, and securing ICBMs.
2. Keeping 150 Minuteman III missiles on alert throughout their respective areas of responsibility.

**014**

1. Maintenance, medical, operations, and mission support.
2. Support the wing's mission of keeping missiles on alert with materiel, resources, and data.
3. TCTOs and other modifications that happen in the missile field.
4. To launch the missile and monitor the remote LFs.

**015**

1. (1) b.
   (2) a.
   (3) i.
   (4) c.
   (5) e.
   (6) f.
   (7) g.

**016**

1. (1) a.
   (2) b.
   (3) f.
   (4) g.
   (5) c.
   (6) d.
   (7) e.
2. Periodic calibration.

**017**

1. Assembling all test components, then testing and launching unarmed ICBMs.
2. Technical expertise necessary to resolve abnormal weapon system problems.
3. Air-launched cruise missile maintenance, ICBM missile maintenance, space operations, and ICBM missile operations.

**018**

1. Ensure it is properly documented.
2. The MCC and the maintenance team chief.
3. When they report for duty or start their standby period.

**019**

1. To issue and receive equipment and vehicles.
2. MXG/SUPT.
3. MOO/SUPT.
4. Because there must be qualified technicians available to perform any task the work center is responsible to perform.
5. Technical data.
6. Fix or document them.

**Complete the unit review exercises before going to the next unit.**

## Unit Review Exercises

**Note to Student:** Consider all choices carefully, select the *best* answer to each question, and *circle* the corresponding letter. When you have completed all unit review exercises, transfer your answers to the Field-Scoring Answer Sheet.

**Do not return your answer sheet to AFCDA.**

26. (011) What two activities merged together to form Air Force Global Strike Command?
    a. Intercontinental ballistic missile forces and long-range bomber assets.
    b. Intercontinental ballistic missile forces and space launch assets.
    c. Cyberspace forces and long-range bomber assets.
    d. Space launch assets and cyberspace forces.

27. (011) The Air Force Global Strike Command's (AFGSC) mission supports the United States
    a. Secretary of State and combatant commanders.
    b. Secretary of the Air Force and the President.
    c. President and combatant commanders.
    d. President and the Chief of Staff.

28. (011) The 8th Air Force plans and executes nuclear deterrence through the use of
    a. long-range intercontinental ballistic missiles (ICBM).
    b. global strike operations.
    c. long-range bombers.
    d. land-based bombers.

29. (012) What combatant command does the 20th Air Force fall under as "Task Force 214"?
    a. US Central Command (USCENTCOM).
    b. US Strategic Command (USSTRATCOM).
    c. US Northern Command (USNORTHCOM).
    d. US Transportation Command (USTRANSCOM).

30. (012) What 20th Air Force logistics division section puts together maintenance data analysis and generates weapon system metrics?
    a. Support.
    b. Facilities.
    c. Communications.
    d. Intercontinental ballistic missile (ICBM) readiness.

31. (012) What 20th Air Force unit operates the intercontinental ballistic missile (ICBM) Center of Excellence (ICE)?
    a. 620th Missile Operations Flight.
    b. Missile Engineering Squadron.
    c. 576th Flight Test Squadron.
    d. 341st Missile Wing.

32. (013) The first level of command where all of the subordinate levels of command are located on the same installation is known as a
    a. numbered Air Force.
    b. major command.
    c. squadron.
    d. wing.

33. (014) A typical missile wing is comprised of maintenance,
    a. operations, mission support, and medical groups.
    b. transportation, mission support, security forces, and operations groups.
    c. operations, communications, mission support and security forces groups.
    d. training operations, missile operations, communications, and security forces groups.

34. (014) Each squadron in the operations group is responsible for
    a. providing facility managers and chefs for 50 launch facilities.
    b. providing maintenance support for all missiles in its squadron.
    c. monitoring and controlling 50 launch facilities and 5 missile alert facilities.
    d. monitoring and controlling 150 launch facilities and 15 missile alert facilities.

35. (015) When a periodic maintenance schedule is set, each year it should not deviate by more than
    a. 10 days.
    b. 60 days.
    c. 120 days.
    d. 365 days.

36. (015) The plans and scheduling section holds daily meetings to
    a. provide status on all new priority 1 through 4 discrepancies.
    b. coordinate training for maintenance personnel.
    c. provide status updates on launch facilities.
    d. coordinate the next day’s actions.

37. (015) The missile maintenance operations center (MMOC) ensures maintenance teams do not exceed their timelines by
    a. providing guidance on mission support plans.
    b. tracking teams’ arrival and departure times.
    c. executing the daily maintenance schedule.
    d. calculating drive times between sites.

38. (015) What section provides central oversight over all Integrated Maintenance Data System (IMDS) related functions?
    a. Decentralized materiel support.
    b. Technical engineering.
    c. Maintenance programs.
    d. Data analysis.

39. (015) What is the mechanical and pneudraulics section (MAPS) responsible for regarding the proofload test facility?
    a. Ensuring cranes can lift their rated loads.
    b. Ensuring usage log data is accurate.
    c. Using the correct lifting slings.
    d. Operations and maintenance.

40. (015) The vehicles and equipment section (VES) must maintain records of
    a. all chemicals used in the field.
    b. technicians who are awaiting training.
    c. inspections and calibration of equipment.
    d. intercontinental ballistic missile support equipment.

41. (016) One purpose of a facilities maintenance team (FMT) is to
    a. replace emergency storage batteries.
    b. perform preventive maintenance.
    c. replace a brine chiller unit.
    d. engage with landowners.

42. (016) While on a launch facility (LF), an electro-mechanical maintenance team (EMT) might perform
    a. repairs on a missile downstage.
    b. installation of a diesel electric unit.
    c. installation of the missile guidance set.
    d. repairs on the emergency storage batteries.

43. (016) What task would a missile maintenance team (MMT) perform on a launch facility (LF)?
    a. Emergency storage battery reconditioning.
    b. Launcher closure system maintenance.
    c. Installation of a missile downstage.
    d. Installation of a brine chiller unit.

44. (017) The verification and checkout equipment (VACE) course provides training on how to
    a. operate a wide range of air-launched cruise missile flight simulators.
    b. operate specialized equipment that gathers data from the missile guidance set.
    c. troubleshoot abnormal problems that occur with the Minuteman III weapon system.
    d. operate specialized equipment that gathers data from an air-launched cruise missile.

45. (018) Who is in command of the launch facility (LF) and missile alert facility (MAF) at all times?
    a. Operations group commander (OG/CC).
    b. Missile combat crew (MCC).
    c. Flight security controller.
    d. Maintenance team chief.

46. (018) Upon return to base, your duty period ends when you either turn in all equipment and vehicles or
    a. depart for your residence.
    b. release the items to another individual or team.
    c. the vehicles and equipment section supervisor releases you.
    d. the team chief notifies the missile maintenance operations center.

47. (019) Who serves as the maintenance group’s focal point for enlisted manning?
    a. First sergeant.
    b. Flight commander.
    c. Maintenance group commander.
    d. Maintenance group superintendent.

48. (019) What must the section noncommissioned officer-in-charge (NCOIC) provide to the vehicles and equipment section (VES) for known maintenance dispatches?
    a. Pre-task briefings.
    b. Projected schedule.
    c. Equipment load lists.
    d. Team composition letter.

# Student Notes

**Please read the unit menu for unit 4 and continue ➔**

# Unit 4. Spacelift, Research & Development, and Missile Tests

**4–1. Spacelift Mission** ..... **4–1**
020. Space domain overview ..... 4–1
021. Roles and responsibilities ..... 4–5
**4–2. Launch Vehicles and Spacecraft** ..... **4–7**
022. Launch vehicle characteristics ..... 4–7
023. Satellite vehicle characteristics ..... 4–10
024. Processing and infrastructure overview ..... 4–11
**4–3. Research and Development** ..... **4–12**
025. Mission of research and development organizations ..... 4–13
**4–4. Missile System Tests** ..... **4–15**
026. Operational test and evaluation program ..... 4–15
027. Simulated electronic launch–Minuteman test ..... 4–17

THE AIR FORCE'S widespread and continuing mission includes Spacelift programs as well as research and development (R&D). The Air Force's ever-increasing Spacelift program is a reliable and effective method for putting a variety of payloads in orbits for both military and commercial use. With the continuous advancements in technology, the Air Force's research and development organizations are consistently searching for innovative ways to use that technology to take us through the 21st century. Both of these programs are highly important in keeping the Air Force the most advanced and capable war fighting force in the world. Because you are a missile and space systems maintenance technician, you could have the unique opportunity to work in the Spacelift and/or R&D program. Therefore, in this unit, you will become familiar with both programs, as well as some missile system tests.

## 4–1. Spacelift Mission

The use of space capabilities by the US military has changed significantly since the first military satellites were put into orbit. Continuous improvements in space technology have led to the development of more advanced space systems. Space capabilities are integral to overall military mission accomplishment and provide advantages needed for success in all joint operations. Military, civil, and commercial sectors of the US are increasingly dependent on space capabilities.

### 020. Space domain overview

Today's space operations enhance nearly every US military mission. They provide Global Positioning System (GPS) information, satellite communications, advanced warning of missile attacks, and space control operations for our combat forces. The use of these space capabilities has proven to be a significant force multiplier when integrated into joint operations. A force multiplier is a capability that, when added to and employed by a combat force, significantly increases the combat potential of that force and thus enhances the probability of a successful mission. Any degradation to these systems could have a significant impact on the success of a military operation. In this lesson, we'll concentrate on Spacelift and the essential US military programs that Spacelift directly supports.

#### Definition and purpose

Spacelift is defined as the ability to deliver satellites, payloads, and material into space. Spacelift operations are conducted to deploy, sustain, augment, or reconstitute space-based capabilities supporting US military operations and/or national security objectives.

The Air Force is responsible for operating US launch facilities and dictates Spacelift as one of the 17 key operational functions—*assured access to space*. Spacelift has four basic purposes:

- Deploying space systems to fulfill new requirements for satellite service.
- Sustaining existing space systems whose individual satellites are nearing the end of their useful life, predicted to fail, or have failed.
- Augmenting existing space systems with redundant or additional capability to enhance space system performance or increase system survivability.
- Servicing and maintaining existing or newly deployed space systems.

Every military operation the United States conducts is now dependent on space, from humanitarian aid through the full spectrum of military operations. Air Force Space Command (AFSPC) assets and capabilities provide mission-critical global access, persistence, and awareness for our national security; additionally, they have become vital to the global community and world economy. In these ways, AFSPC provides not only multi-domain deterrence capabilities, but also formidable integrated combat capabilities across the range of military operations should deterrence fail. For example, more than half of the precision munitions being used today are enabled by the GPS. The remotely piloted aircraft that provide our critical intelligence, surveillance and reconnaissance, missions are controlled through satellite communications. Our space capabilities integrate our forces, making them more aware, and enabling them to act more quickly than our adversaries. Because of these advantages, we can protect the country's interests more effectively, and with fewer casualties than in past conflicts.

## Spacelift programs

Spacelift is a critical element of our space program that gives the US independence to maximize our opportunities in space. We would not have a superior Air Force if we did not have the ability to properly deploy and sustain our satellite constellations (a group of artificial satellites working in concert to accomplish a single purpose). Now that you have a basic understanding of Spacelift, we'll turn our attention to some of the US military programs that directly support the space mission.

### *Evolved expendable launch vehicle program*

The evolved expendable launch vehicle (EELV) program provides the United States with affordable and reliable assured access to space from at least two launch service providers (LSP). These LSPs provide critical Spacelift capability to support the DOD and other national security missions. With multiple launch vehicle configurations and launch sites on both US coasts, the EELV program has a proven track record of success, demonstrating unprecedented reliability since 2002.

EELV is *a launch service, not a weapon system*, and is primarily paid for with production funds. As the AF's Spacelift modernization program, EELV was designed to increase reliability and reduce launch costs by at least 25 percent over heritage Atlas, Delta, and Titan space launch systems. Part of these savings result from the government now procuring commercial launch services and turning over responsibility for operations and maintenance of the launch complexes to the contractors.

### *Space exploration program*

The space exploration (SpaceX) program was founded in 2002 by Elon Musk. The company is headquartered in El Segundo, California, with test facilities in Texas and launch sites at the Ronald Reagan Ballistic Missile Defense Test Site (RTS), Kwajalein Atoll, in the Marshall Islands, CCAFS, Florida, and Vandenberg AFB, California. The SpaceX program is the first commercial launcher to service the International Space Station (ISS). The SpaceX program uses the two-stage Falcon 9 rocket to deliver the Dragon spacecraft (under National Aeronautics and Space Administration [NASA] contract) on resupply missions to the ISS (fig. 4–1). The Falcon 9 has nine first-stage Merlin engines clustered together, thus allowing for two engine failures during flight and mission completion. This

makes the Falcon 9 stand above all other launch vehicles in its class. The Dragon spacecraft can carry cargo in its pressurized capsule, to include secondary payloads. The ultimate goal of the Dragon is to carry astronauts to and from space.

**Figure 4–1. SpaceX, Falcon 9 (Photo courtesy of SpaceX).**

### *Geosynchronous space situational awareness program*

Geosynchronous space situational awareness program (GSSAP) satellites provide a space-based capability operating in the near-geosynchronous orbit regime supporting USSTRATCOM space surveillance operations. This constellation of satellites support the joint space functional component commander (JSFCC) tasking to collect space situational awareness data allowing for more accurate tracking and characterization of man-made orbiting objects.

### *Global positioning system*

The GPS is a space-based positioning, navigation, and timing system consisting of a minimum of 24 satellites that provide real-time navigation and timing information to military and civilian users' worldwide. GPS satellites fly in near-circular, semi-synchronous orbits at an altitude of 12,500 miles. They circle the earth every 12 hours, emitting continuous navigation signals on two different L-band frequencies. This configuration provides adequate coverage over the entire globe at least 98 percent of the time. Signals are accurate to within one-millionth of a second, velocity within a fraction of a mile per hour, and location to within a few feet. In addition to the satellites, the system consists of a worldwide satellite control network and GPS receiver units that acquire the satellite's signals and translate them into precise position and timing information. Figure 4–2 shows a GPS Block IIA satellite.

**Figure 4–2. GPS Block IIA.**

### *Military satellite communications*

Military satellite communications (MILSATCOM) refers to military-unique systems owned, or leased, and operated by the DOD. MILSATCOM is comprised primarily of the advanced extremely high frequency (AEHF) and wideband global satcom (WGS) constellations. MILSATCOM is an integrated system of satellites, terminals, and control stations, valued at more than $42 billion, providing communications to aircraft and ships, both mobile and fixed sites.

**Figure 4–3. AEHF Satellite.**

The AEHF satellite system (fig. 4–3) is a joint service satellite communications system that provides survivable, global, secure, protected, and jam-resistant communications for high-priority military ground, sea and air assets. AEHF allows the National Security Council and unified combatant commanders to control their tactical and strategic forces at all levels of conflict (including general nuclear war), and supports the attainment of information superiority.

The WGS system (fig. 4–4) is a constellation of highly capable military communications satellites that leverage cost-effective methods and technological advances in the communications satellite industry. It enables reliable, secure satellite communications, providing the ability to conduct multiple and simultaneous military operations, both independently and as part of a coalition force.

### *Rocket system launch program*

The rocket system launch program (RSLP) provides responsive space and research, development, test and evaluation (RDT&E) launch vehicle support to the DOD and other government agencies, using commercial launch systems and excess ballistic missile assets. The RSLP mission was established by the Secretary of Defense in 1972. It provides mission planning, payload integration, vehicle acquisition, processing, and launch operations, booster storage and disposition, aging surveillance, and maintenance and logistics support for selected DOD responsive space and RDT&E launches.

**Figure 4–4. WGS Satellite.**

### *Space-based Infrared System*

The Space-based Infrared System (SBIRS) provides space-based surveillance for missile warning, missile defense, battlespace characterization, and technical intelligence. SBIRS contributes to missile warning by providing timely and accurate data to the president, geographic and functional combatant commanders (CCDR), and other users within the space community regarding detection, identification, and predicted impact-point location of ballistic missile launches. The missile defense mission is supported by SBIRS via the timely, accurate, and reliable

transmission of ballistic missile launch and in-flight data to missile defense assets in-theater in order to allow those systems to respond to an enemy attack. The SBIRS technical intelligence mission is performed through the expeditious relaying of infrared target signatures and threat performance data to the intelligence community for analysis. The SBIRS battlespace characterization mission refers to the provision of data used to enhance the overall situational awareness of decision makers, support battle damage assessments, and aid in intelligence preparation of the operational environment.

## 021. Roles and responsibilities

Space does not represent an entirely new mission for 2M mission and space systems maintenance technicians; rather, it does represent a new environment that can enhance traditional missions. In defining the importance of space to national security, the Air Force identifies ways in which you can contribute to further enhance space operations. In order to be successful at performing your Spacelift mission role, you must clearly understand your responsibilities and mission objectives.

The 2Ms serving within AFSPC comprise a small percentage of the overall 2M population. The 5- and 7-skill level 2Ms in Spacelift leverage their experience in the cruise missile and ICBM maintenance fields to provide critical skills that enable mission success for national security space (NSS) launch processing and operations while also paving the way to broaden their experience. The assignment locations for AFSPC 2Ms are primarily at Cape Canaveral Air Force Station in Florida and Vandenberg AFB in California. Assignments to these locations are available through the base of preference (BOP) program and tours are limited by the assignment availability code (AAC) to four years.

It’s easy to glamorize a billion-dollar spacecraft and streamlined boosters thundering into the sky; however, the space program still requires experienced 2M technicians to validate procedures, conduct inspections, and ensure all the processing and launch infrastructure is maintained.

2Ms make space missions happen. As a result, this lesson discusses the four 2M roles that support the Spacelift mission: mission assurance technician, Spacelift maintenance technician, facilities and infrastructure technician, and the quality engineering technician.

### Mission assurance technician

A mission assurance is an integrated engineering-level assessment of analysis, production, verification, validation, operation, maintenance and problem resolution processes performed over the lifecycle of a program. It is through these mission assurance activities that an operator/user determines whether or not there is an acceptable level of risk to employment of a system or end item to deliver an intended capability in an intended environment. Mission assurance activities are conducted by the corresponding program office and launch site personnel throughout the system life cycle. Although 2Ms support mission assurance in a variety of roles, it is primarily as MATs. MATs provide technical insight for the government on contractor launch vehicle and satellite processing activities, utilizing experience from previous AF missile/munitions tours. MAT duties typically involve early morning procedure reviews, then contractor pre-task briefings, followed by hours of task observation at the processing facility before writing a daily report of the activities observed.

### Spacelift maintenance technician

Spacelift maintenance technicians (SMTs) ensure assigned Spacelift and support equipment remains safe, serviceable, and properly configured to meet mission needs. Maintenance actions include, but are not limited to:

- Certification.
- Inspection.
- Repair.
- Overhaul.

- Modification.
- Preservation.
- Refurbishment.
- Testing.

SMT are primarily 2M0X2s, but some programs utilize skills from across the 2M spectrum.

### Facilities and infrastructure technician and quality engineering technician

Two other roles 2Ms fulfill in support of mission assurance include facilities and infrastructure technicians (FIT) and quality engineering technicians (QET). FITs assist launch group leadership in providing launch and sustainment risk assessments of critical processing and launch infrastructure to associated program offices. QETs serve in the EELV program office and utilize their experience as MATs to verify and validate the integrity of LSP quality management systems.

In conclusion, the support 2Ms provide to the Spacelift mission is key to the strategic, operational, and tactical might of our country's armed forces. AFSPC has proven that the capabilities to access and control space is vital to the American way of life, as well as the stability of our economy. AFSPC assignments afford 5- and 7-skill level 2Ms the opportunity to broaden their experience and bring lessons learned from the launch industry back to operational AFGSC units.

## Self-Test Questions

**After you complete these questions, you may check your answers at the end of the unit.**

### 020. Space domain overview

1. Define Spacelift.

2. What critical element gives the US independence to maximize opportunities in space?

3. What program provides space situational awareness data for tracking man-made orbiting objects?

### 021. Roles and responsibilities

1. What are the two *primary* locations where AFSPC 2Ms are assigned?

2. What are the four roles 2Ms fill to support the Spacelift mission?

3. What does an MAT provide during contractor launch vehicle and satellite processing activities?

## 4–2. Launch Vehicles and Spacecraft

Military operations would be less effective without the support of Spacelift and spacecraft (satellites). Most notably, we could not put all of our GPS-guided bombs on target if it was not for the hard work of space professionals (enlisted, commissioned officers, and civilians). The Spacelift program uses a variety of launch vehicles (LV) to put satellite vehicles (SV) into orbit. The SV type, weight, and the orbit needed determines which LV is used. In this section, we will focus on LV and SV characteristics.

**NOTE:** The terms satellite and spacecraft are used interchangeably throughout this text. The booster is the rocket, missile, or space launch vehicle that places the payload in orbit. Payload is used to designate a satellite carried on the rocket prior to it being placed in orbit.

### 022. Launch vehicle characteristics

It takes a great deal of energy to put a satellite into space. Over time, the US has developed some of the most powerful rockets in history to support its national objectives, but as we move through the twenty-first century, it is necessary to discard old designs and begin anew. As you've learned in the previous section, the EELV program provides the latest generation of American space launch vehicles. Current technology requires the use of multi-stage LVs to deliver SVs to orbit. Multi-stage LVs use two or more stages, each stage containing its own engine and propellant. While each LV used to deliver the NSS missions is different, they all share some common characteristics.

#### Booster(s)

In order to reach Earth orbit, an LV must accelerate its spacecraft payload to a minimum velocity of 28,000 kilometers (km) (17,500 miles) per hour, which is roughly 25 times the speed of sound. To maximize the mass of the spacecraft that a particular launch vehicle can carry, the vehicle's structural weight is kept as low as possible. Most of the LV's weight is actually its propellants—i.e., fuel and the oxidizer needed to burn the fuel. The portions of an LV used to lift an SV through the dense atmosphere near the Earth's surface are generally referred to as "boosters." Boosters can be single stage or multiple stages acting in either serial or parallel staging. Examples of LVs with single stage boosters include the Atlas-II, Atlas-III, Falcon–9, Delta-IV Medium, and Atlas-V 401 and 501 configurations. Examples of LVs using multiple stages operating in serial are the Minotaur family of LVs and Saturn-IV/V rockets used by NASA during the Apollo program. Finally, examples of multiple stages operating in parallel are the Delta-IV Heavy, Falcon Heavy, and any LV using strapped-on solid rocket motors (SRM).

**Figure 4–5. Parallel Staging**

**Figure 4–6. Series Staging**

### Upper stage(s)

Upper stages are designed to operate in little to no atmospheric pressure and usually complete the orbital injection of SVs or accelerate them into higher energy orbits. Because of the inefficiency of using a single stage to reach orbit, all LVs currently use at least one upper stage.

### Payload accommodations

Payload accommodations are those features or components which integrate SVs with the LV and protect them from the potentially damaging environments seen during launch activity. Examples of payload accommodations are the payload fairing (PLF), payload attachment fitting (PAF), acoustic dampeners, and secondary payload adapters.

## 023. Satellite vehicle characteristics

Satellite vehicles provide the ability for people and governments around the world to communicate with certainty. SVs, whether military, commercial, foreign, or civil, provide global coverage, which affords the United States and allied national and military leaders with a means to maintain strategic situational awareness and a means to convey their intent to the operational commander responsible for conducting joint operations in a specific area. While mission requirements drive the design of satellites and spacecraft to perform a variety of tasks, all SVs essentially share some common characteristics, to include structure, telemetry, electrical power systems, propulsion, attitude, and orbit control. Let's briefly look at some of those common characteristics of the SV.

### Structures

The structural sub-system provides the mechanical base and stability for the SV. Additionally, it provides the SV's integrity as the structural sub-system is designed to withstand the environments and induced stress experienced during transportation to the launch site and launch. Once in orbit, the structural subsystem is subject to a completely different set of forces. The absence of the atmosphere exposes satellites to increased solar radiation and to unfiltered sunlight. Solar radiation can break down complex substances or charge metallic components. Unfiltered sunlight can cause thermal expansion, as a result of heating, and change the physical size of structural members. Repeated heating/cooling cycles can warp their shape.

### Telemetry

The telemetry system monitors the health and accuracy of SV operations. It includes all of the equipment necessary for the satellite to transmit telemetry (*downlink*) and to receive commands from the ground station (*uplink*). Uplinked commands are passed to the command and control (C2) subsystem for processing. The number of sensors, transmitters, receivers, and antennas is dictated by mission requirements.

### Electrical Power Systems

Electrical Power Systems (EPS) on SVs all perform the same three basic functions: generate or collect energy, store energy, and control the discharge or use of energy. Energy is usually collected through the use of solar arrays, although radioisotope thermoelectric generators (RTG) are sometimes used for interplanetary missions. Batteries are generally used to store energy. The power distribution and regulation system does just what its name implies, directs energy to the SV components, and protects the electrical systems from damage.

### Propulsion

The propulsion provides thrust for attitude control and orbit corrections (as required) to accomplish the specified mission. It also provides thrust for orbit injection and changes. A subset of propulsion is the reaction control subsystem (RCS), which is used for in-orbit maneuvers. Three types of RCSs currently in use are monopropellant, bipropellant, and pressurized gas.

#### *Monopropellant system*

The monopropellant system uses a single fluid that undergoes a chemical and thermodynamic change to provide thrust.

#### *Bipropellant system*

A bipropellant system develops thrust from the combination of a fuel and an oxidizer, each injected separately into a chamber where they react to form combustion products that expand and eject through a nozzle.

### *Pressurized system*

In a pressurized system, thrust is developed from the rapid expansion of a pressurized propellant through a jet nozzle. Although this system is highly reliable, the size and mass of the required storage tanks limit its use to applications requiring only short thrusts.

### Attitude and Orbit Control

After placing a satellite in the desired orbit, we must control its orientation about its axes. The attitude and orbit control calculates and controls orbital positions, attitudes, velocities, and angular rates using onboard sensors and torque application devices. It also sends control signals to the thrusters, solar array positioners, and communication/payload positioners. Since satellite attitude control and stabilization requirements vary from one mission to another and perhaps at various times throughout a single mission, more than one attitude and orbit control is often necessary. This system contains equipment to aid in attitude determination, such as attitude reference (to include star sensors, Earth sensors, sun sensors, and magnetometers).

## 024. Processing and infrastructure overview

As you can imagine, processing and launching space missions requires a number of large and expensive facilities. We'll start this lesson by looking at the three primary launch processing facilities associated with Spacelift.

As the date of a planned launch draws nearer, payloads are shipped to the launching base where the flight will take place. Following its arrival from the manufacturer, the payload is re-checked to assure that it has not been damaged or affected in transit. Sometimes this includes partially dismantling the payload and re-accomplishing extensive checkouts multiple times. The launch process includes the length of time between an LV or SV arriving at its processing facility and when the LV or SV actually launches. The information in the following paragraphs breaks down the basic components of the infrastructure used in processing at each facility and their locations.

### Space launch complex

The space launch complex (SLC) is an above ground platform from which the LV and SV(s) are vertically launched. At a minimum, most SLCs contain an umbilical tower, a launch table, and flame trench.

- An umbilical tower houses the communication and commodity delivery apparatus necessary to command and prepare the LV/SV(s) for launch.
- A launch table is the reinforced structure which the LV is secured to prior to launch and is reinforced to survive the high-energy environment seen during the launch.
- A flame trench directs the exhaust plume of the LV away from sensitive ground support equipment during launch.

**NOTE:** An SLC is distinct from a missile launch facility while a missile launch facility also launches a missile vertically, it is located underground in order to help harden it against enemy attack or conceal it from surveillance.

### Payload processing facility

The payload processing facility (PPF) provides a central location for all auxiliary machinery and equipment used to assemble and test SV systems, subsystems, and components. Tasks performed may include, but are not limited to, the final assembly of SVs, integrating the SV with the PAF or secondary payload adapter, integrated system tests, fueling of the SV, and encapsulation of the SV within the PLF. PPFs are co-located at or a short drive from the SLC.

### Launch vehicle processing facility

Launch processing of the LV occurs at the launch vehicle processing facility. Tasks performed may include, but are not limited to, integration of the booster(s) and upper stages, installation of flight

termination systems, integrated system tests, and avionics installation. LV processing facilities can be co-located at the SLC, near the SLC, or thousands of miles from the SLC.

## Self-Test Questions

**After you complete these questions, you may check your answers at the end of the unit.**

### 022. Launch vehicle characteristics

1. What is the name of the portion of an LV used to lift an SV into orbit?

2. What term is used to describe the features or components used to *protect* SVs and LVs from the potentially damaging environments seen during launch activity?

### 023. Satellite vehicle characteristics

1. What characteristic maintains the integrity and stability of the SV?

2. List the *three* basic functions of the electrical power system.

3. Which characteristic consists of sensors that measure vehicle orientation?

### 024. Processing and infrastructure overview

1. What facility consists of an umbilical tower, launch table, and a flame trench?

2. In what facility is the final assembly of SVs performed?

3. In what facility is the installation of LVs flight termination system performed?

## 4–3. Research and Development

R&D plays a pivotal role in keeping our weapon systems on the cutting edge of technology; one step ahead of adversaries. Our nation's military thrives under a highly complex operational environment. Through two different agencies, the Air Force modernizes and tests our weapon systems and space launch capabilities to ensure that we can continue to meet the demands of this environment.

## 025. Mission of research and development organizations

Through the Air Force Research Laboratory (AFRL) and Air Force Operational Test and Evaluation Center (AFOTEC), our weapon systems are modernized and new weapon systems are developed and tested. Let us look at the mission of each of these prestigious organizations.

### Air Force Research Laboratory

The AFRL is *headquartered* at Wright-Patterson AFB, Ohio, but maintains several laboratories throughout the country. It was created in 1997 through the consolidation of four major laboratories and the Air Force Office of Scientific Research (AFOSR).

#### *Mission*

AFRL's mission is leading the discovery, development, and integration of warfighting technologies for America's aerospace forces. It has full-spectrum laboratories, responsible for planning and executing the Air Force's science and technology program. Together with industrial and academic experts, the AFRL develops and delivers a wide range of revolutionary technology that keeps our air, space, and cyberspace forces the world's best.

#### *Organization*

The AFRL contains a headquarters division, one wing, and the AFOSR located at Wright-Patterson AFB. Additionally, the AFRL contains eight separate directorates that are responsible for different weapon system components. The directorates are provided in the following table:

| AFRL Directorates | |
|---|---|
| **Directorate** | **Responsibilities** |
| Human Performance Wing | This directorate is designated as a wing, stationed at Wright-Patterson AFB. It is the first human-centric warfare wing to consolidate research, education, and operational consultation under one roof. The wing's primary mission areas are aerospace medicine, science, and technology, as well as how humans are integrated with the weapon systems. |
| Air Force Office of Scientific Research | AFOSR, operating out of Arlington, Virginia, specializes in long-term, broad-based research in aerospace-related science and engineering to further aid efforts by the other directorates. |
| Air Vehicle Directorate | Operating out of Wright-Patterson AFB, the air vehicle directorate develops technologies to sustain current aerospace vehicles, as well as new technologies for unmanned aerial vehicles. They help develop vehicles for future space access and find new ways to strike the enemy through aerospace avenues. |
| Directed Energy Directorate | The directed energy directorate, Kirtland AFB, New Mexico, focuses on directed energy, including high-energy microwaves, lasers, adaptive optics, imaging, and the effects of each technology. |
| Information Directorate | Operating out of Rome, New York, this directorate focuses on information technologies. Specifically, they specialize in the exploitation of information and defensive information warfare, as well as developing intelligent operating systems. |
| Materials/Manufacturing Directorate | This directorate, operating from Wright-Patterson AFB and Tyndall AFB, Florida, researches technologies to support aerospace component manufacturing as well as the materials used to make them. They support current systems by finding better materials and ways to make the same product. |
| Munitions Directorate | The munitions directorate operates only from Eglin AFB, Florida, and focuses on researching and developing new air-delivered munitions. |
| Propulsion Directorate | Operating out of Wright Patterson AFB and Edwards AFB, California, this directorate develops air and space vehicle propulsion and power technologies. Focus areas include turbine and rocket engines, advanced propulsion systems, and the associated fuels and propellants. |

| AFRL Directorates | |
|---|---|
| **Directorate** | **Responsibilities** |
| Sensors Directorate | Headquartered at Wright-Patterson AFB and operating out of Hanscom AFB, Massachusetts, and Rome, New York, the Sensors Directorate researches new technologies that US warfighters need to find and engage the enemy and eliminate their ability to hide or threaten our forces. Its core technology areas include radar, active and passive electro-optical targeting systems, navigation aids, automatic target recognition, sensor fusion, threat warning, and threat countermeasures. |
| Space Vehicles Directorate | The space vehicles directorate, with operating locations at Kirtland AFB and Hanscom AFB, develops and transitions space technologies. Primary focus areas include radiation hardened electronics, space power, space structures and control, space based sensing, studying space environmental effects, developing autonomous maneuvering, and conducting balloon and satellite flight experiments. |

## Air Force Operational Test and Evaluation Center

AFOTEC, located at Kirtland AFB, New Mexico is a direct reporting unit under HAF; they do *not* fall under a MAJCOM or a NAF. It is the Air Force's independent test agency responsible for testing, under operationally realistic conditions, new systems being developed for the Air Force and for other services and agencies.

AFOTEC has five detachments located at Edwards AFB, California, Peterson AFB, Colorado, Eglin AFB, Florida, Nellis AFB, Nevada, and Kirtland AFB, New Mexico and multiple other operating locations throughout the nation.

### *Mission*

AFOTEC's mission is to test and evaluate new warfighting capabilities. They place these items in the most operationally realistic environment as possible to get the most accurate test results. These tests inform national agencies about new systems and influence the decision to divert national resources to their development.

Test teams conduct tests at selected sites; collect, analyze, and evaluate the data; and prepare formal reports. The teams are *managed* by AFOTEC, but are *staffed* with personnel from the operating and support commands that will eventually employ these systems.

### *Test program*

AFOTEC's independent and objective evaluations of how well systems will meet operational requirements provide a vital link between the developer and the user. They are key elements of the system acquisition approval process.

Operational tests are designed to address critical issues regarding a system's performance in combat-like environments when operated by field personnel. They seek to answer questions about how safe, effective, reliable, maintainable, compatible, and supportable new systems will be.

The results of AFOTEC's tests, normally conducted on prototype and pre-production models, play an important role in acquisition decisions. Test results identify deficiencies requiring corrective actions.

## Self-Test Questions

**After you complete these questions, you may check your answers at the end of the unit.**

### 025. Mission of research and development organizations

1. Match the description in column A with the Air Force Research Laboratory Directorate in column B. Items in column B may be used only once.

*Column A*

____ (1) Studies the effects of laser technology.
____ (2) Researches technologies to support aerospace component manufacturing.
____ (3) Operates from Eglin AFB, Florida only.
____ (4) Studies how humans are integrated with weapon systems.
____ (5) Researches aids efforts by the other directorates.
____ (6) Researches technologies for automatic target recognition.
____ (7) Develops intelligent operating systems.
____ (8) Studies space environmental effects.
____ (9) Works on new technologies for unmanned aerial vehicles.
____ (10) Focus areas include turbine and rocket engines.

*Column B*

a. Air Force Office of Scientific Research.
b. Air Vehicles.
c. Directed Energy.
d. Information.
e. Materials/Manufacturing.
f. Munitions.
g. Propulsion.
h. Sensors.
i. Space Vehicles.
j. Human Performance.

2. Who does the AFOTEC report to?

3. What is AFOTEC's mission?

4. What are operational tests conducted by AFOTEC designed to address?

## 4–4. Missile System Tests

As you progress through your AF career as a missile maintainer, you may routinely participate in various types of test and evaluation activities for the ICBM system. One of the primary test and evaluation activities used by the Air Force to test and evaluate ICBM systems is the operational test and evaluation (OT&E) program.

### 026. Operational test and evaluation program

The Air Force employs AFGSC to conduct the ICBM OT&E program to provide accuracy and reliability planning factors to the USSTRATCOM commander; evaluate the operational effectiveness and suitability of system modifications or upgrades prior to initial fielding. When conducting the OT&E program, operational realism is second *only* to safety. ICBM systems tested in the OT&E program must be, as much as possible, representative of the deployed force and employed

environment. This concept governs configuration of facilities, selection of missiles, use of technical data, training, and flight profile/targeting options. The following are some of the OT&E programs:

- OTL.
- SELM.
- Weapon system test (WST).

### Operational test launches

The purpose of an OTL is to launch an operational ICBM in a peacetime environment in as near to the operational flight environment as possible from first stage ignition to impact. When an OTL is conducted for modifications or upgrades made to the Minuteman III missile, this test is called a force development evaluation (FDE). The OTLs or FDEs consist of removing an ICBM from an LF at one of the ICBM wings, installing it in an LF at Vandenberg AFB, California, and launching the ICBM 4,200 miles towards a predetermined target at the Kwajalein Atoll located in the western chain of the Marshall Islands.

#### *Objectives*

Weapon system accuracy, reliability, and performance are the *primary* test objectives during *every* OTL to meet Department of Energy and AFGSC requirements. The basic objectives of the OTL program are to accomplish the following:

- Establish accuracy and reliability planning factors under representative operational test conditions.
- Detect trends or changes in weapon system accuracy and reliability.
- Identify areas for weapon system modification and improvements.
- Verify operational effectiveness and suitability.

#### *Process*

The operational test launch process begins with higher headquarters randomly selecting an LF located at one of the ICBM wings. This selection takes into account the ICBM configuration and the LF must be on-alert to be eligible for selection. The selected LF missile goes through an alert readiness test (ART). If the missile passes the ART, the missile is taken off-alert and the 576 FLTS contacts the wing to ensure there are no issues such as weather, maintenance, impassable roads, etc., that would prevent a successful missile removal.

Next, wing maintenance personnel remove the missile and associated components from the LF and ship them to Vandenberg AFB. The wing's maintenance personnel, known as Task Force (TF), and the 576 FLTS personnel work together installing the missile, the wing's LF components, and test components into the test LF. The TF and 576th personnel perform the necessary maintenance tasks to bring the LF and its controlling MAF up to alert status. Technicians in the 576th install special telemetry equipment on the missile to allow for monitoring of the missile and its systems. While on alert status, ground missile and airborne instrumentation systems are tested and constantly monitored as part of the OTL. At a predetermined time, the TF MCC launch the missile from the test LF.

After the launch, test personnel collect vital information about the OTL from the missile selection through impact and submit a report. This report serves as AFGSC's evaluation and historical record of the OTL.

### Weapon system tests

WSTs verify the readiness of the ICBM alert force and provide data for estimating launch reliability *throughout* the lifecycle of the deployed weapon system. An integral part of the WST program is the hardness surveillance electromagnetic pulse program (HSEP) which conducts the electromagnetic pulse (EMP) hardness evaluation of the ICBM system. HSEP is capable of testing three different

EMP environments that can affect the ICBM system: high altitude EMP, source region EMP (SREMP) from near neighbor attack, and SREMP from direct attack.

### *Conducting the test*

HSEP tests are conducted according to existing nuclear weapon system safety rules, current AFGSC safety directives, and applicable technical orders and instructions. HSEP testing is normally conducted on a *minimum* of seven LFs and two MAFs at the selected operational missile wing. The sites are first inspected for damaged or misconfigured critical components designed to protect the system. Afterwards, maintenance technicians enter the LFs and MAFs to install test components and remove some operational components. Once the site is configured for the HSEP test and wing personnel establish security, EMP is directly injected into the systems while MCCs are performing *simulated* operational functions, including terminal countdown and launch.

### *Reporting*

The maintenance technicians return the site to its proper configuration while the HSEP personnel review the results from the test. These results are analyzed and acted upon by the ICBM System Program Office and reported to AFGSC.

## 027. Simulated electronic launch–Minuteman test

Although the SELM test is part of the OT&E program, we will discuss it separately because this test is the one you will perform most often as a 2M0X2. A SELM test is the testing of ICBMs in their deployed environment at operational wings, without actually launching them. From the execution of the launch procedures by an MCC through issuance of the first stage ignition signal, this test provides the most complete test of the deployed ICBM force. During a SELM test, launch command signals can come from a LCC *or* an ALCC. Six LFs and two LCCs are *normally* involved in a SELM test.

The SELM test involves isolating the LCC and LFs from an operational squadron of ICBMs and specially configuring those facilities to allow for testing of critical commands in the deployed environment. Trained technicians perform special maintenance procedures to isolate the test LFs and LCCs from adjacent facilities. These procedures also include installing the unique SELM test equipment designed to monitor and record launch critical signals during the test. SELM testing provides the capability to activate or simulate activation of several ICBM LF ordnance devices. These devices include the following:

- Launcher closure door.
- Upper umbilical critical leads disconnect.
- Missile suspension system articulating arms.
- Guidance and control umbilical release and retract.

The activation of ordnance devices occurs at two LFs during every SELM test, except for the launcher closure door; the launcher closure door is *only* required to be activated *once* a year. The remaining LFs will simulate the activation of ordnance devices.

### Preparation

An ICBM wing begins preparing for a SELM test approximately four to five months before the actual test. As a 2M0X2 stationed at an operational ICBM wing, you will most likely participate in some portion of the SELM test preparation procedures. Some of the preparations an ICBM wing *must* undertake for a SELM include beginning to plan for SELM activities, assigning special leadership positions, selecting the maintenance team members, coordinating with outside agencies, conducting SELM and special training, and ensuring SELM testing equipment is operational.

### Posturing

This part of the SELM testing procedure involves having trained maintenance personnel configure the test facilities as specified in applicable technical data, AF publications, and the Test Execution Order (TEO). A majority of the posturing procedure includes the installation of the SELM test equipment throughout the test LFs. The SELM control monitor (SCM) and SELM test cable set are two of the test equipment pieces used for a SELM test.

#### *Simulated electronic launch–Minuteman control monitor*

Installed at the test LFs, the SCM *routes* certain ordnance signals to resistive loads. This prevents arming the missile ordnance, activating the first stage battery, and ignition of the first stage. Squib firing signals are sent to the ordnance devices through switches on the SCM. The switches permit the choice of simulated or actual ordnance firing. The SCM also produces a printout of the terminal countdown signals as they occur during a SELM test.

#### *Simulated electronic launch–Minuteman cable set*

The SELM cable set consists of four cable cases. Because they are so important, the cables are *always* lowered into the LER using the cable cases and safe maintenance practices. This is done to ensure the technicians don't damage the cables. When installed at the LF, the SELM cables connect the SCM to the missile, missile components, and other ground equipment circuits.

Once the launch facilities are postured, a Last Look Inspection team will *verify* the proper configuration of all SELM test equipment, SELM cable connections, and safing of the missile and applicable AVE. If for *any* reason a team must go into the LF *after* this inspection has taken place, another Last Look Inspection *must* be accomplished.

### Simulated electronic launch–Minuteman testing

SELM testing starts with the initiation of isolation verification and ends with confirmation of successful terminal countdown. Actual SELM testing is divided into two distinct phases: airborne test and ground test.

For SELM testing, *normally* 50 percent of the LF test sorties are simulated launched by MCCs from an ALCC on the *first* test day. On the second day of testing, MCCs in the LCCs simulate the launch of the remaining sorties. However, sortie testing takes places throughout the entire day; they are not launch simulated all at the same time.

At LFs where ordnance activation is simulated, test evaluation teams are not required to be present at the LF during testing. However, the unit must have sufficient teams on standby to retrieve SELM test set printouts from unmanned test LFs and to conduct a quick-look inspection within 24 hours of terminal countdown. At LFs where any ordnance is *activated*, test *evaluation* teams are stationed at the respective LFs to maintain communication with the MCC. After each test, the test evaluation team enters the respective test LF, performs a quick-look inspection of SELM test set printouts, and reports any out-of-tolerance conditions.

### Reposturing

After completion of the SELM test, unit maintenance personnel begin the process of restoring the LFs and LCCs to their operational configuration. This is accomplished by removing the SELM test equipment and reconfiguring the test LFs and LCCs to their pre-test status.

### Reporting

For effective SELM program management, as well as for accurate evaluation of the performance of ICBM weapon systems, several types of reports are generated throughout the SELM testing process. These reports must be accurate, complete, and submitted within the given time restrictions. Depending on the severity of the information, some reports are due immediately, whereas others are submitted within days or even up to a month later.

## Self-Test Questions

**After you complete these questions, you may check your answers at the end of the unit.**

### 026. Operational test and evaluation program

1. When conducting the OT&E program, what comes second *only* to safety?

2. When is an OTL called a FDE?

3. Who installs the missile, wing LF components, and test components into the test LF?

4. Who launches the missile from the test LF?

5. What happens once a site is configured for an HSEP test and wing personnel establish security?

### 027. Simulated electronic launch–Minuteman test

1. What is a SELM test?

2. During a SELM test, how often are the ordnance devices activated?

3. How are the SELM cables lowered into the LER?

4. What does a Last Look Inspection team verify?

5. Where are test evaluation teams stationed *during* the actual SELM testing?

## Answers to Self-Test Questions

### 020

1. The ability to deliver satellites, payloads, and material into space.
2. Spacelift.
3. GSSAP.

### 021

1. Cape Canaveral Air Force Station in Florida and Vandenberg AFB in California.
2. MAT, SMT, FIT, and QET.
3. Technical insight.

### 022

1. Booster.
2. Payload accommodations.

### 023

1. Structures.
2. To generate or collect energy, store energy, and control the discharge or use of energy.
3. Attitude and orbit control.

### 024

1. Space launch complex.
2. PPF.
3. Launch vehicle processing facility.

### 025

1. (1) c.
   (2) e.
   (3) f.
   (4) j.
   (5) a.
   (6) h.
   (7) d.
   (8) i.
   (9) b.
   (10) g.
2. HAF.
3. Test and evaluate new warfighting capabilities.
4. Critical issues regarding a system's performance in combat-like environments when operated by field personnel.

### 026

1. Operational realism.
2. When it is being conducted for modifications or upgrades to the Minuteman III missile.
3. The wing's maintenance personnel, known as Task Force, and 576th FLTS personnel.
4. Task Force MCCs.
5. EMP is directly injected into the systems while MCCs are performing simulated operational functions, including terminal countdown and launch.

**027**

1. Testing of ICBMs in their deployed environment at operational wings, without actually launching them.
2. The activation of ordnance devices occurs at two LFs during every SELM test, except for the launcher closure door, the launcher closure door is only required activation once a year.
3. By using the cable cases and safe maintenance practices.
4. The proper configuration of all SELM test equipment, SELM cable connections, and safing of the missile and applicable AVE.
5. At all test LFs where ordnance activation is simulated, test evaluation teams are not required to be stationed at LFs during the testing. At LFs where ordnance is activated, a test evaluation team is stationed at the respective LFs to maintain communication with the MCC.

**Complete the unit review exercises.**

## Unit Review Exercises

**Note to Student:** Consider all choices carefully, select the *best* answer to each question, and *circle* the corresponding letter. When you have completed all unit review exercises, transfer your answers to the Field Scoring Answer Sheet.

**Do not return your answer sheet to AFCDA.**

49. (020) To support United States military operations and national security objectives, Spacelift operations are conducted to augment or reconstitute spaced-based capabilities, along with providing for their
    a. deployment and sustainment.
    b. evaluation and sustainment.
    c. deployment and stabilizing.
    d. evaluation and stabilizing.

50. (020) What space program provides navigation data to military and civilian users all over the world?
    a. Global Positioning System (GPS).
    b. Evolved expendable launch vehicle program (EELV).
    c. Geosynchronous space situational awareness program (GSSAP).
    d. Wideband global satellite communications (WGS) constellations.

51. (021) Who is responsible for making sure assigned Spacelift and support equipment remains safe, serviceable, and properly configured to meet mission needs?
    a. MAT.
    b. SMT.
    c. QET.
    d. FIT.

52. (022) The portion of a launch vehicle (LV) used to lift a satellite vehicle (SV) through the dense atmosphere near the Earth's surface is generally referred to as a
    a. booster.
    b. payload fairing.
    c. payload accommodations.
    d. propulsion system rocket engine.

53. (023) What sub-system provides the mechanical base for the satellite vehicle (SV)?
    a. Structural.
    b. Interstage.
    c. Common Core Booster.
    d. Attitude and orbit control.

54. (023) What system monitors the *health* and *accuracy* of satellite vehicle (SV) operations?
    a. Antenna.
    b. Telemetry.
    c. Station keeping.
    d. Electrical power system.

55. (023) What is *generally* used to store energy on the electrical power system of a satellite vehicle (SV)?
    a. Boosters.
    b. Batteries.
    c. Electrodes.
    d. Nanoball batteries.

56. (024) What directs the exhaust plume of the launch vehicle (LV) away from sensitive ground support equipment during launch?
    a. Flame trench.
    b. Launch table.
    c. Intertank skirt.
    d. Umbilical tower.

57. (024) Final assembling of the satellite vehicle (SV) is performed in the
    a. launch control center (LCC).
    b. space launch complex (SLC).
    c. payload processing facility (PPF).
    d. launch vehicle processing facility.

58. (025) What Air Force Research Laboratory (AFRL) directorate finds new ways to strike the enemy through aerospace avenues?
    a. Munitions.
    b. Propulsion.
    c. Air vehicles.
    d. Directed energy.

59. (026) What is a primary test objective during every operational test launch (OTL)?
    a. Guidance improvements.
    b. Detect trends or changes.
    c. Weapon system accuracy.
    d. Operational effectiveness.

60. (026) Which test provides data for estimating launch reliability throughout the lifecycle of the deployed weapon system?
    a. Weapon system test (WST).
    b. Operational test launch (OTL).
    c. Simulated electronic launch test.
    d. Terminal countdown systems test.

61. (027) Once the launch facilities are postured for a simulated electronic launch-Minuteman (SELM), who verifies the proper configuration of all SELM test equipment?
    a. Squadron commander.
    b. SELM task force team.
    c. Last look inspection team.
    d. Missile combat crew (MCC) inspection team.

62. (027) What percentage of launch facility test sorties is normally simulated launched on the first test day?
    a. 25.
    b. 50.
    c. 75.
    d. 100.

# Student Notes

# Glossary of Abbreviations and Acronyms

| | |
|---|---|
| **°F** | degrees Fahrenheit |
| **AAC** | assignment availability code |
| **ACP** | alternate command post |
| **AEHF** | advanced extremely high frequency |
| **AETC** | Air Education and Training Command |
| **AFB** | Air Force Base |
| **AFCFM** | Air Force Career Field Manager |
| **AFECD** | Air Force Enlisted Classification Directory |
| **AFGSC** | Air Force Global Strike Command |
| **AFI** | Air Force instruction |
| **AFMAN** | Air Force manual |
| **AFMC** | Air Force Material Command |
| **AFOCD** | Air Force Officer Classification Directory |
| **AFOSR** | Air Force Office of Scientific Research |
| **AFOTEC** | Air Force Operational Test and Evaluation Center |
| **AFRL** | Air Force Research Laboratory |
| **AFSC** | Air Force specialty code |
| **AFSNCOA** | Air Force Senior Noncommissioned Officer Academy |
| **AFSPC** | Air Force Space Command |
| **AFTO** | Air Force technical order |
| **AGE** | aerospace ground equipment |
| **ALCC** | airborne launch control center |
| **ALCM** | air-launch cruise missile |
| **ALMM** | air-launch missile maintenance |
| **ART** | alert readiness test |
| **ASU** | automatic switching unit |
| **AVE** | aerospace vehicle equipment |
| **BOP** | base of preference |
| **C2** | command and control |
| **CAD** | cable air dryer |
| **CBR** | chemical, biological, radiological |
| **CC** | commander |
| **CCAF** | Community College of the Air Force |
| **CCAFS** | Cape Canaveral Air Force Station |
| **CCDR** | combatant commander |
| **CCM** | command chief master sergeant |
| **CDC** | career development course |
| **CEM** | chief enlisted manager |

| | |
|---|---|
| **CFETP** | career field education and training plan |
| **CMSAF** | chief master sergeant of the Air Force |
| **CMSgt** | chief master sergeant |
| **COCOM** | combatant commander |
| **DIT** | data integrity team |
| **DMS** | decentralized material support |
| **DOD** | Department of Defense |
| **ECS** | Environmental Control System |
| **EELV** | evolved expendable launch vehicle |
| **ELAB** | electronics laboratory |
| **EMP** | electromagnetic pulse |
| **EMT** | electro-mechanical team |
| **EPS** | Electrical Power System |
| **ERMS** | Environmental Control System (ECS) Remote Monitoring System |
| **FDE** | force development evaluation |
| **FIT** | facilities and infrastructure technicians |
| **FLTS** | flight test squadron |
| **FM** | facility manager |
| **FMS** | facility maintenance section |
| **FMT** | facility maintenance team |
| **FTD** | field training detachment |
| **GMMP** | guided missile maintenance platform |
| **GPS** | Global Positioning System |
| **GSP** | gyro-stabilized inertial platform |
| **GSSAP** | Geosynchronous Space Situational Awareness Program |
| **HAF** | Headquarters, Air Force |
| **HHQ** | higher headquarters |
| **HICS** | Hardened Intersite Cabling System |
| **HQ** | headquarters |
| **HSEP** | hardness surveillance electromagnetic pulse program |
| **ICBM** | intercontinental ballistic missile |
| **ICBMSG** | intercontinental ballistic missile (ICBM) Systems Group |
| **ICE** | intercontinental ballistic missile (ICBM) Center of Excellence |
| **IMDS** | Integrated Maintenance Data System |
| **IMOC** | intercontinental ballistic missile maintenance officer course |
| **IMPSS** | Improved Minuteman Physical Security System |
| **IMT** | initial maintenance training |
| **ISS** | International Space Station |

| | |
|---|---|
| **IZ** | inner zone |
| **JSFCC** | Joint Space Functional Component Commander |
| **km** | kilometer |
| **lb** | pound |
| **LC** | launcher closure |
| **LCC** | launch control center |
| **LCEB** | launch control equipment building |
| **LCSB** | launch control support building |
| **LER** | launcher equipment room |
| **LF** | launch facility |
| **LSB** | launcher support building |
| **LSP** | launch service provider |
| **LV** | launch vehicle |
| **MAF** | missile alert facility |
| **MAJCOM** | major command |
| **MAPS** | mechanical and pneudraulics section |
| **MAT** | mission assurance technician |
| **MCC** | missile combat crew |
| **MCL** | master change log |
| **MCM** | missile communications maintenance |
| **MDG** | medical group |
| **MES** | missile engineer squadron |
| **MGC** | missile guidance computer |
| **MGS** | missile guidance set |
| **MGSC** | missile guidance set control |
| **MHT** | missile handling team |
| **MICAP** | mission capability |
| **MILSATCOM** | military satellite communications |
| **MMOC** | missile maintenance operations center |
| **MMT** | missile maintenance team |
| **MMXS** | missile maintenance squadron |
| **MOO** | maintenance operations officer |
| **MPH** | missile potential hazard |
| **MPP** | Minuteman power processor |
| **MSB** | missile support base |
| **MSE** | missile support equipment |
| **MSG** | missile support group |
| **MT** | missile transporter |
| **M-Van** | maintenance support van |
| **MW** | missile wing |

| | |
|---|---|
| **MXG** | maintenance group |
| **MXS** | maintenance squadron |
| **NAF** | numbered Air Force |
| **NASA** | National Aeronautics and Space Administration |
| **NCOA** | noncommissioned officer academy |
| **NCOIC** | noncommissioned officer in charge |
| **NCU** | nozzle control unit |
| **NSS** | National Security Space |
| **OG** | operations group |
| **OIC** | officer in charge |
| **OJT** | on-the-job training |
| **OT&E** | operational test and evaluation |
| **OTL** | operational test launch |
| **OZ** | outer zone |
| **P&S** | plans and scheduling |
| **PAC** | portable air conditioning |
| **PAF** | payload attachment fitting |
| **PAS** | Personnel Access System |
| **PBCS** | Post-boost Control System |
| **PBV** | post-boost vehicle |
| **PDU** | power distribution unit |
| **PLCC** | primary launch control center |
| **PLF** | payload fairing |
| **PLTF** | proofload test facility |
| **PMEL** | precision measurement equipment laboratory |
| **PMT** | periodic maintenance team |
| **PPF** | payload processing facility |
| **PREL** | power, refrigeration, and electrical laboratory |
| **PRP** | personnel reliability program |
| **psi** | pounds per square inch |
| **psia** | pounds per square inch atmosphere |
| **PSRE** | propulsion system rocket engine |
| **PT** | payload transporter |
| **QA** | quality assurance |
| **QAE** | quality assurance evaluator |
| **QET** | quality engineering technician |
| **R&D** | research and development |
| **RCS** | reaction control subsystem |
| **RDT&E** | research, development, test and evaluation |
| **REACT** | rapid execution and targeting console |

| | |
|---|---|
| **RPIE** | real property installed equipment |
| **RON** | remain overnight |
| **RS** | re-entry system |
| **RSLP** | rocket systems launch program |
| **RTG** | radioisotope thermoelectric generators |
| **RTS** | Ronald Reagan Ballistic Missile Defense Test Site |
| **RTT** | recurring technical training |
| **RV** | re-entry vehicle |
| **RVA** | remote visual assessment |
| **SBIRS** | Space-based Infrared System |
| **SCC** | security control center |
| **SCM** | simulated electronic launch–Minuteman (SELM) control monitor |
| **SCP** | squadron command post |
| **SELM** | simulated electronic launch–Minuteman |
| **SIN** | support information network |
| **SKT** | specialty knowledge test |
| **SLBM** | submarine-launched ballistic missile |
| **SLC** | space launch complex |
| **SMT** | Spacelift maintenance technician |
| **SNCO** | senior noncommissioned officer |
| **SpaceX** | space exploration |
| **SPVO** | special purpose vehicle operations |
| **SrA** | senior Airmen |
| **SRAM** | static random access memory |
| **SREMP** | Source Region electromagnetic pulse |
| **SRM** | solid rocket motors |
| **SST** | survivable system team |
| **START** | Strategic Arms Reduction Treaty |
| **STS** | specialty training standard |
| **SUPT** | superintendent |
| **SV** | satellite vehicle |
| **TBA** | Training Business Area |
| **TCTO** | time compliance technical order |
| **TE** | transporter-erector or technical engineering |
| **TEO** | Test Execution Order |
| **TF** | Task Force |
| **TM** | technical manual |
| **TODO** | technical order distribution office |
| **TRG** | training group |

| | |
|---|---|
| **TRS** | training squadron |
| **US** | United States |
| **USAF** | United States Air Force |
| **USSTRATCOM** | United States Strategic Command |
| **UTM** | unit training manager |
| **VAC** | volts of alternating current |
| **VACE** | verification and checkout equipment |
| **VES** | vehicles and equipment section |
| **VHF** | very high frequency |
| **WAPS** | Weighted Airman Promotion System |
| **WCP** | wing command post |
| **WGS** | wideband global satcom |
| **WMD** | weapons of mass destruction |
| **WSA** | weapon storage area |
| **WSSR** | weapon system safety rules |
| **WST** | weapon system test |

# Student Notes

**AFSC 2M052**
**2M052 01 1906**
**Edit Code 06**