CDC 1C853B

Radar, Airfield & Weather Systems Journeyman

Volume 3. Standard Maintenance Practices; Meteorological, Air Traffic Control, and Tactical Airfield Systems

Air Force Career Development Academy
Air University
Air Education and Training Command

1C853B 03 1909, Edit Code 01
AFSC 1C853

Author: MSgt Michael P. Webb & MSgt Troy A. Partin
334th Training Squadron
Radar, Airfield & Weather Systems School (AETC)
334 TRS/ULCA
610 Hangar Road, Building 4214
Keesler Air Force Base, Mississippi, 39534-2030
DSN: 597-3118
E-mail address: 334TRS.ULCA.1C8CDCWriter@us.af.mil

Instructional Systems Specialist: Dexter L. King

Editor: Maxine Baldwin

Air Force Career Development Academy (AFCDA)
Air University (AETC)
Maxwell AFB-Gunter Annex, Alabama

Material in this volume is reviewed annually for technical accuracy, adequacy, and currency. For Weighted Airman Promotion System (WAPS) Specialty Knowledge Test (SKT) purposes, the examinee should check the *Enlisted Promotions References and Requirements Catalog* to determine the correct references to study.

THIS IS A THREE-volume B set career development course (CDC) that covers fundamental career knowledge you need to satisfy CDC requirements for the award of the 5-skill level in the 1C8X3 Air Force Specialty Code (AFSC).

This volume is divided into three units that introduce you to standard maintenance practices, meteorological equipment, air traffic control communication systems, and tactical airfield equipment.

Unit 1 covers standard practices and is divided into three sections. The first section explains cabling and equipment concepts. The second section covers the importance of grounding, bonding, shielding, and lightning protection. The last section describes electrostatic discharge principles and concepts.

Unit 2 discusses meteorology fundamentals and the various meteorological systems that are maintained by the 1C8X3 career field and is divided into two sections. The first section describes the various meteorological types and how they are measured. The second section covers the radar weather systems and the three automated meteorological stations that are found throughout the career field.

Unit 3 covers air traffic control communications and tactical airfield systems. This unit is divided into two sections, with the first section covering the equipment most often found in flight towers which allow air traffic controllers full flightline and ground-to-air communications. The second section covers mobile and deployable air traffic control systems maintained by Radar, Airfield & Weather Systems technicians.

A glossary is included for your use.

Code numbers on figures are for preparing agency identification only.

The use of a name of any specific manufacturer, commercial product, commodity, or service in this publication does not imply endorsement by the Air Force.

To get a response to your questions concerning subject matter in this course, or to point out technical errors in the text, unit review exercises, or course examination, call or write the author using the contact information provided in this volume.

NOTE: Do not use Air Force Instruction (AFI) 38-402, *Airmen Powered by Innovation and Suggestion Program,* to submit corrections for printing or typographical errors. For Air National Guard (ANG) members, do not use Air National Guard Instruction (ANGI) 38-401, *Suggestion Program.*

If you have questions that your supervisor, training manager, or education/training office cannot answer regarding course enrollment, course material, or administrative issues, please contact Air University Educational Support Services at http://www.aueducationsupport.com. Be sure your request includes your name, the last four digits of your social security number, address, and course/volume number.

For Guard and Reserve personnel, this volume is valued at 16 hours and 4 points.

NOTE:

In this volume, the subject matter is divided into self-contained units. A unit menu begins each unit, identifying the lesson headings and numbers. After reading the unit menu page and unit introduction, study the section, answer the self-test questions, and compare your answers with those given at the end of the unit. Then complete the unit review exercises.

Page

Unit 1. Standard Practices 1-1
1−1. Cabling and Equipment Concepts 1-1
1−2. Grounding, Bonding, Shielding, and Lightning Protection 1-16
1−3. Electrostatic Discharge 1-25
Unit 2. Meteorological Systems 2-1
2–1. Meteorology 2-1
2–2. Weather Systems 2-7
Unit 3. Air Traffic Control Communications and Tactical Airfield Systems 3-1
3−1. Tower Communications Equipment 3-1
3−2. Mobile and Deployable Air Traffic Control Systems 3-12

Glossary G–1

Unit 1. Standard Practices

1−1. Cabling and Equipment Concepts 1–1
401. Wire color-coding standards 1–2
402. Fiber optic installation 1–4
403. Channel bank 1–9
404. Basic troubleshooting 1–10
1−2. Grounding, Bonding, Shielding, and Lightning Protection 1–16
405. Grounding 1–17
406. Bonding 1–19
407. Shielding 1–20
408. Lightning protection 1–22
1−3. Electrostatic Discharge 1–25
409. Electrostatic discharge principles 1–25
410. Electrostatic discharge control concepts 1–27

STANDARD MAINTENANCE PRACTICES for communications technicians are normal procedures on how we support information operations. No matter what base you are at, what unit you are assigned, or what Air Force specialty code (AFSC) you are in, there is a fundamental set of standards, methods, and procedures all communications technicians must be held to. In volume 1, we covered the basic concepts of landline and fiber optic cables. In this unit, we will only address those practices distinctive to the "maintenance" career fields that have not been covered in prior volumes.

1−1. Cabling and Equipment Concepts

It is important to ensure all communications we install are as reliable as possible. However, if the communications do happen to fail after the installation team has left the area, it is imperative that common standards were followed to ensure timely troubleshooting and repair can occur. From using the appropriate labels to ensuring the proper wire color, you must adhere to wiring standards.

The installation of Air Force communications-electronics (C-E) equipment whether new installations or modifications of control towers, command post, local area network (LAN), antennas, antenna towers, radio, radar, intrusion detection, cryptography or technical control facilities, to name a few, are covered by a set of rules or standards. These installation standards are established in standard installation practices technical orders (SIPTO). The table below shows a partial list of SIPTOs you may use on-the-job.

Standard Installation Practices Technical Orders	
TO	**Title**
TO 31–10–2	FANNING AND FORMING CONDUCTORS FOR FIXED C-E EQUIPMENT
TO 31–10–3	OUTSIDE PLANT INSTALLATION
TO 31–10–6	CABLE RACKS, TROUGHS, AND THEIR SUPPORTS
TO 31–10–7	TERMINATING AND SOLDERING ELECTRICAL CONNECTIONS
TO 31–10–9	MARKING SITE LAYOUT
TO 31–10–10	ANCHORING DEVICES FOR GROUND C-E EQUIPMENT
TO 31–10–11	CROSS CONNECTIONS

Standard Installation Practices Technical Orders	
TO	**Title**
TO 31–10–12	METAL DUCTS AND CONDUIT
TO 31–10–13	CABLING OF FIXED GROUND C-E EQUIPMENT
TO 31–10–14	RADIO FREQUENCY CABLES AND CONNECTORS
TO 31–10–16	STRAPPING OF FIXED C-E COMPONENTS
TO 31–10–24	GROUNDING PRACTICES FOR FIXED C-E EQUIPMENT
TO 31–10–27	EQUIPMENT DESIGNATIONS
TO 31–10–29	ERECTION AND ASSEMBLY OF GROUND C-E EQUIPMENT
TO 31–10–34	FIBER OPTIC COMMUNICATIONS CABLES AND CONNECTIONS

As you can tell from this partial list of SIPTOs, a wide range of installation guidance is covered. In this section, we will cover wire color-coding and inspection standards. Our goal is to familiarize you with the basic concepts of each area and with source publications.

401. Wire color-coding standards

Wires are coated with insulation of different colors to help identify each wire, or pair of wires, within a cable. Cables often contain many wires. For example, in a 25 pair cable, there are actually 50 wires inside. If all 50 were the same color, you would not be able to determine which wires would make up a pair. In addition, if we put a signal on a pair at one end of a cable, we need to know where to find that signal at the other end, which may be miles away. This is why color-coding is so important. In this lesson, we will take a brief look at color code standards for telecommunications cabling as well as LAN connections.

Telecommunications cables

Telecommunication cables come in many different sizes, from 25 pair to thousands of pairs. The wires within the cable jacket are grouped together using a binder. The binder is generally a thin plastic colored tape that spirals around a specific number of pairs that replicate in color in each separate binder. Within the binders are the individual pairs (two wires each) that are twisted together. The individual wires are called “tip” or “primary” and the other “ring” or “secondary.”

Now that we know how the wires are grouped, we can establish the color-coding standard. Looking at the table below, you can see your “tip” wire group order is white, red, black, yellow, and violet. Additionally, you see the “ring” colors repeat in each tip group in the order of blue, orange, green, brown, and slate. This establishes the order for the first 25 pairs. Beneath the “Super Unit” column in the table shows the additional breakdown of binder colors in order to increase your pair count. Note your binder color scheme’s relationship to your tip and ring colors.

Cable and Wire Color Code					
Color		**Pair Number**	**Super Unit**		**Pair Count**
Tip (+)	**Ring (-)**		**Binder**	**Color**	
White	Blue	1	1	White - Blue	1 - 25
White	Orange	2	2	White - Orange	26 - 50
White	Green	3	3	White - Green	51 - 75
White	Brown	4	4	White - Brown	76 - 100
White	Slate	5	5	White - Slate	101 - 125

Cable and Wire Color Code					
Color		Pair Number	Super Unit		Pair Count
Tip (+)	Ring (-)		Binder	Color	
Red	Blue	6	6	Red - Blue	126 - 150
Red	Orange	7	7	Red - Orange	151 - 175
Red	Green	8	8	Red - Green	176 - 200
Red	Brown	9	9	Red - Brown	201 - 225
Red	Slate	10	10	Red - Slate	226 - 250
Black	Blue	11	11	Black - Blue	251 - 275
Black	Orange	12	12	Black - Orange	276 - 300
Black	Green	13	13	Black - Green	301 - 325
Black	Brown	14	14	Black - Brown	326 - 350
Black	Slate	15	15	Black - Slate	351 - 375
Yellow	Blue	16	16	Yellow - Blue	376 - 400
Yellow	Orange	17	17	Yellow -Orange	401 - 425
Yellow	Green	18	18	Yellow - Green	426 - 450
Yellow	Brown	19	19	Yellow - Brown	451 - 475
Yellow	Slate	20	20	Yellow - Slate	476 - 500
Violet	Blue	21	21	Violet - Blue	501 - 525
Violet	Orange	22	22	Violet - Orange	526 - 550
Violet	Green	23	23	Violet - Green	551 - 575
Violet	Brown	24	24	Violet - Brown	576 - 600
Violet	Slate	25	25		

The tip and ring terminology is a holdover from the original telephone systems. Today, they are used to identify polarity of the wire pair. Although reverse polarity may not affect traditional telephone voice communication systems, it can slow down data rates for modem communications.

Local area networks connections

Figure 1–1 shows two wiring color schemes for RJ45 network (also called Ethernet) connections; the kind generally used for connecting a computer or printer to a network hub or switch. This type of connection is referred to as a straight through connection, since both ends of the cable use the same color code. Notice that the color schemes use the same color codes, but the pin assignments are different from those on a 25-pair cable. The color schemes shown below are specifically used to achieve high data rate on twisted pair category 5 (CAT-5) cable. The T568A and T568B represent two different color standards. Most newly installed equipment follows the T568B standard. Regardless of what standard you are using, the key is to keep it consistent throughout your system.

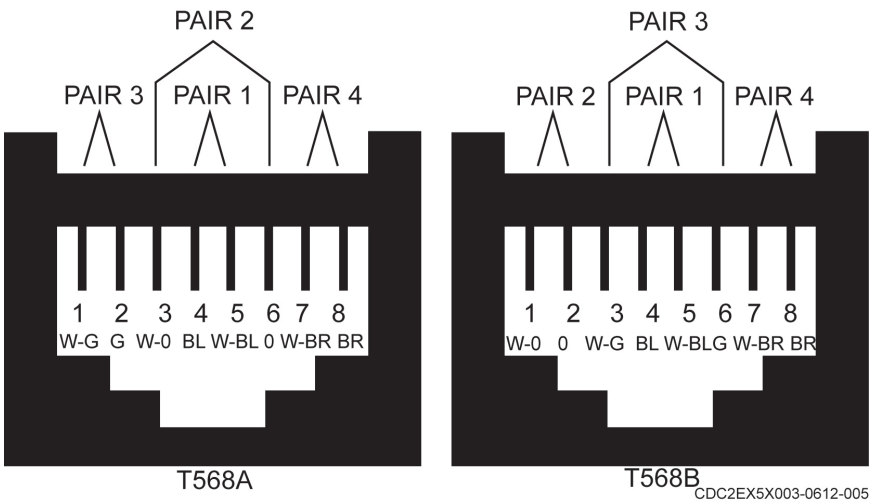

Figure 1–1. Network connector color scheme.

BL: blue	W-BL: white – blue
BR: brown	W-BR: white – brown
G: green	W-G: white – green
O: orange	W-O: white – orange

In addition to the straight through cable, you may come across a network crossover cable. These cables are used to operate in a peer-to-peer fashion without a hub/switch. The table below depicts the color code standard for each end of a T568B crossover cable. Note the transmit and receive signals cross at each end, hence the name.

T568B Crossover Cable					
RJ45 Pin# (End 1)	**Wire Color**	**Signal**	**RJ45 Pin# (End 2)**	**Wire Color**	**Signal**
1	White/Orange	Transmit+	1	White/Green	Transmit+
2	Orange	Transmit-	2	Green	Transmit-
3	White/Green	Receive+	3	White/Orange	Receive+
4	Blue	Unused	4	White/Brown	Unused
5	White/Blue	Unused	5	Brown	Unused
6	Green	Receive-	6	Orange	Receive-
7	White/Brown	Unused	7	Blue	Unused
8	Brown	Unused	8	White/Blue	Unused

402. Fiber optic installation

Fiber optic cable is a high capacity transmission medium with qualities and characteristics that can be degraded when it is subjected to excessive pulling tension, sharp bends, and crushing forces. The number of splices in a fiber cable route should be minimized to reduce transmission losses and splicer installation hours. Most major manufacturers provide both single-mode and multi-mode cable in sufficient lengths, some up to 15 kilometers (km), to allow for pull-through configuration on most Department of Defense (DOD) bases and posts.

Installation considerations

Fiber optic cable can be installed inside buildings using the same methods as coaxial or copper twisted pair cable; however, the following guidelines should be observed:

1. Do not exceed maximum pulling tension.
2. Do not exceed minimum bend radius, either for the installation or for long-term racked specifications.
3. Avoid sharp bends and corners.
4. Normally the first four feet of the pulling end is cut off to discard the damaged fiber that will result from the pulling process. On longer runs, or complicated runs where the maximum pulling tension could have been exceeded, then consider severing more of the cable. Test thoroughly to ensure the shattered glass is removed prior to splitting/splicing or termination, or you could have unnecessary waste of material and hours of labor.
5. Provide additional mechanical or crush protection in those high-risk traffic areas or work environment.
6. Do not exceed vertical rise specifications unless intermediate tension relief is provided, i.e. wire lashing or lashed cable supports to strand, or cable clamp support.
7. Observe all governing building and fire codes. Use the cabling, raceway, and conduit specified in the codebooks.
8. Secure the fiber cable to existing proper supports or larger tele-communications cables wherever possible.
9. Do not affix to fire sprinkler water pipes.
10. Do not deform the cable jacket, specifically when using cable fasteners or ties.
11. Protect connectors, especially when installing pre-connectorized cables.

Lubricants

Cable lubricant is recommended for difficult fiber optic cable pulls as a means of lessening pulling tension for most outside plant applications. However, short hand pulls inside buildings will typically not require lubricants. Considerations in choosing a lubricant are drying time, temperature performance, and handling characteristics.

Cable lubricants must be compatible with the fiber optic cable's outer sheath. Most of the manufacturers that are at the forefront of the cable industry have a medium density polyethylene outer sheath on their standard loose-tube cable. However, most tight-buffered cables normally have a polyvinyl chloride (PVC) (non-plenum rated) or fluoropolymer (plenum-rated) sheath; these are generally intended for interior use.

Never use detergent-based lubricants when placing fiber optic cable. Most detergents will promote stress cracks when used on polyethylene. Use only approved cable lubricants, such as high quality "polywatertype" pulling lubricant. Check the manufacturer's product data.

Lubricants should be applied according to the manufacturer's recommendations. Some lubricant manufacturers and their vendors suggest distributing the lubricant throughout an innerduct (conduit) by pulling a swab, or cloth rag in front of the cable as it is being installed in the innerduct.

Pumps and gravity-feed devices can also be used to inject pulling lubricant into the innerduct at strategic locations throughout the cable pull route. Additional lubricant should be added prior to bends and known severe offsets, and sections that have uphill elevation changes.

Pulling grips and swivels

A pulling grip is necessary to secure the pulling line to the strength members of the cable. Pulling grips for pre-connectorized cables are typically factory-installed. The pulling grips for raw cable ends can be easily installed in the field by trained technicians, or can be factory installed by special order.

The woven-type cable grip is designed for ease of installation in the field. They are commonly called a “kellem grip” as Kellem brand is a primary manufacturer of the pulling grips. There are several versions of this type of pulling grip:

1. A very small version of the standard type used for pulling larger twisted-pair cables. The aramid yarn strength member is pulled, or wove, through the weave of the grip. It is then secured at the head of the grip with the use of various knots. The compression of the grip helps to transfer tensile force to the strength member.
2. A modified version of the grip describe above comes with a “locking” version where the metal or plastic strength member is inserted in a channel at the head of the grip and a “set”, or “lock” screw is tightened down on the member.
3. With the grip installed, pull the “tail” down the length of the cable, making it snug. Several individual turns of steel lashing wire, wove around the cable and through the grip, should be cinched-down and biting into the sheath. This will significantly increase the odds that the grip will not slip off the cable sheath inadvertently.

The use of pulling swivels is required to prevent the pull line from placing an unnatural or excessive twist to the cable as it is pulled through the innerduct. Pre-connectorized cable can be placed in much the same way, except that extreme care must be taken to protect the connectors and isolate them from tension.

Conduit

When installing fiber optic cable in a rigid conduit or raceway system, observe these special guidelines:

1. Ensure the conduit system does not exceed minimum bend radius.
2. Do not pull through pull-boxes or junction boxes unless minimum bend radius can be exceeded while working.
3. The use of L-bends (LB) should be avoided and used only if long-term bend radius/minimum bend radius can be maintained. Cable should never be pulled through an LB; it should however, be pulled out of the LB and then “back-fed” into the conduit system (see fig. 1–2). During this operation, the cable will be laid in a “figure-8” form on the floor or ground in close proximity to the work. Worker and pedestrian foot traffic is a significant danger to the cable. Go out of your way to protect it.

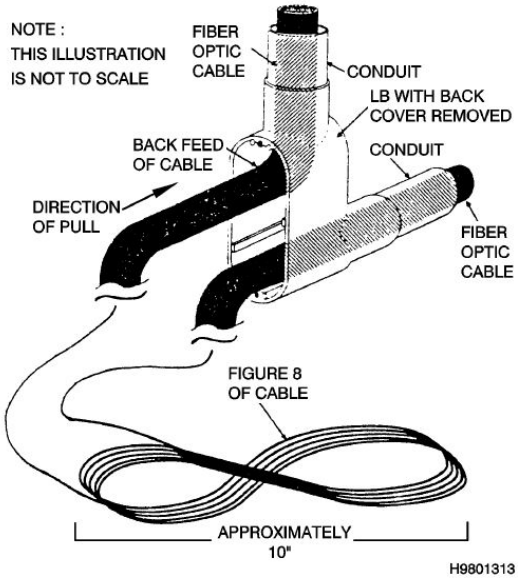

Figure 1–2. Pulling cable thru LB.

If additional cable, specifically larger, bulkier cables are to be installed in the same conduit, then the fiber optic cable needs to be installed inside of an innerduct to provide additional mechanical protection. The innerduct needs to have been installed with, or after, the standard cable. It has become common practice to install three or four innerducts (depending on their diameter) into one main duct thereby filling this duct and earmarking it for fiber cable only.

False floors and dropped ceilings

When installing fiber optic cable in false floors or dropped-ceiling spaces, the following should be observed:

1. In areas of high potential damage such as congested, highly used computer room false floors, the use of flexible conduit for additional crush/mechanical protection is highly recommended.
2. Secure the cable to available supports or larger permanently secured cables when possible. Do not secure any type cable to fire-control water pipes. Do not fasten shielded cables to power cabling or fixtures.
3. Do not pull optical cables around sharp corners, such as support brackets or the “all-thread” rods suspended from the roof or interior ceiling.
4. When entering or exiting a raised floor or a suspended ceiling, ensure that the minimum bend radius is maintained. The liberal use of flex-duct is encouraged.
5. If the false floor or dropped ceiling is a plenum area, it is mandatory to follow the National Electric Code (NEC) and the fire codes regarding the use of properly rated cables and non-combustible conduit.
6. Plenum rated innerduct should be used with plenum rated cable. Riser rated innerduct is to be used with riser rated cable, or plenum rated cable if you are completing a run.

Cable trays and ladder racks

When installing fiber optic cable in cable trays or ladder racks, observe these special guidelines:

1. Install fiber optic cable in such a way to minimize potential damage when additional cables are installed or retrieved. Secure off to one side with cable ties; do not create a “bed” of cable spanning the width of the raceway, cable tray, or ladder rack.
2. Secure the cable every 36 inches on a horizontal run, and every 24 inches on a vertical run. Secure to the rack or ladder, or larger cable in a raceway, using cable ties. Do not tighten so much as to severely dent the outer sheath; this could break the glass strand or put a micro-bend in the fiber, degrading the service.
3. Maintain minimum bend radius around corners by using flexible conduit, or other supports.
4. At raceway transitions, maintain the minimum bend radius and provide support and protection for the cable by using flexible conduit.

Vertical runs

When installing fiber optic cable in vertical runs, these special guidelines should be observed:

1. Work from the top, when possible. Let gravity do its job.
2. Install a split wire mesh pulling grip and the top of each run to hold the cable in place until permanently secured. Install it on the cable so that it is prior to where the cable enters termination hardware or horizontal distribution system.
3. Install intermediate split-wire pulling grips wherever the maximum vertical rise has been exceeded. Take extra measures to ensure that the grips do not slip-away or detach from the device (hook) it is attached to.
4. Secure the cable in the riser wiring cabinets or closets with cable ties or straps to prevent damage from laying in the work area. Additionally, if the cabinet or closet is at the top of the riser conduit, secure the cable to prevent it from slipping back down the conduit.

5. Ensure that the governing fire codes are maintained with the use of noncombustible innerduct, conduits, and fire stop material at each floor or wall penetration.

Termination and splice points

When installing fiber optic cables observe these guidelines at all termination and splice points:

1. A 30-foot length of fiber cable is to be left coiled, at all splice and termination locations from the initial installation. This is earmarked for future maintenance or expansion requirements.
2. At splice and termination points, allow sufficient cable slack to reach a convenient location for a polishing or splicing table, plus an additional 3.5 meters (11.4 feet).
3. Termination hardware should be located to allow convenient use, convenient termination, and facilitate routing of additional locations.
4. When routing cable along walls to terminate hardware or end equipment, it is advised to protect exposed cable with flexible conduit, rigid conduit, or wire duct to the entrance point of the termination hardware or cabinets.
5. When routing cable into an equipment rack or cabinet, the minimum bend radius should be maintained in the transition from the floor or ceiling, to the rack or cabinet by using flexible conduit and supporting hardware.
6. In equipment racks, the cable will be secured to the frame with cable ties to prevent accidental snagging of the cable. The use of properly rated flexible conduit in what is deemed a high activity area is highly advisable (fig. 1–3).

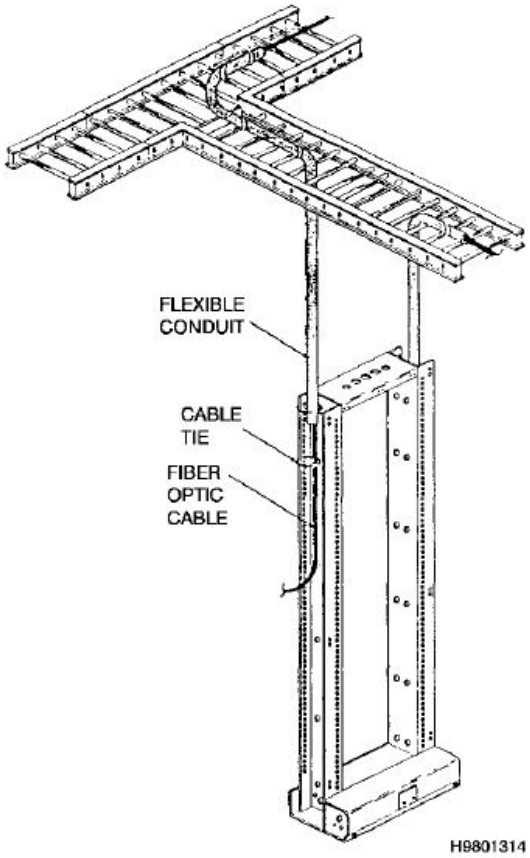

Figure 1–3. Typical routing, ladder rack to equipment rack.

Fiber optic warning signs should be placed on all innerduct and conduits containing fiber optic cable. Warning signs help prevent damage resulting from the cable being mistaken for something else.

403. Channel bank

The concepts of common landlines (such as copper, coaxial, and fiber optic cables) have already been discussed in Volume 1 of this set. In this lesson, we will briefly discuss another transmission device called the "channel bank." For this discussion, you will learn about the Charles channel bank, commonly called the "Charles Bank."

Description

The transmission system 1 (T1) channel bank is a menu-driven, programmable time-division multiplexer (TDM) that combines 24 channels of voice or data service into a standard 1.544 megabits per second (Mbps) trunk. The T1 channel bank is also compatible with microwave, satellite, fiber optic T1 line facilities, and fractional T1 configurations. The T1 channel bank uses a single T1 power supply and a monitor, control, and configure card. The architecture of the T1 channel bank is a mid-plane design that accommodates plug-in card sets that come in pairs. One plug-in card inserted into the front end of the chassis contains the circuit function associated with multiplexing. A second plug-in card inserted into the rear-matching slot contains the electrical and mechanical interface functions. For example, the quad voice card can use different types of rear cards for interfacing different telephone signaling systems. This makes it easier and less costly to adapt to different applications. Monitoring, control, and configuration of the T1 channel bank are accomplished via a VT100™ or VT52™ terminal. This reduces the need to set switches manually on the plug-in cards. Because the T1 channel bank provides a number of options to give you greater control over your communications network, you can connect several sites together and control them from one central location. Password protection is provided to allow only authorized entry into the configuration screens.

Features and benefits

There are many benefits to using a channel bank in network operations. The table below explores the features and benefits for a T1 channel bank.

Channel Bank	
Features	**Benefits**
Menu-driven network management	Configuration, monitor, and control are administered with a built-in menu-driven management system. Management using a PC or dumb terminal reduces installation, training, and troubleshooting time.
Reduced leased-line expenses	In a point-to-point application, many leased lines can be combined into one four (4)-wire line.
Modular design	Allows expansion with minimal cost. Cards can be added as the network grows.
Toll-quality voice	Combining high-speed voice and data multiplexing over a single T1 circuit reduces recurring costs. Pulse-code modulation based voice ensures high quality audio and reliability. Foreign exchange subscriber, foreign exchange office (FXO), and entertainment and media (E&M) interfaces are supported.
Data options	High-speed data cards and dual channel cards are available. V.35, RS-530, and RS-232 interfaces are fully supported.
Modem options	Dual channel V.32bis modem card options provide direct connection between a voice channel and each modem. This eliminates the need for a separate modem bank and saves money. Ideal for modem pooling, remote LAN access, and credit card/point-of-sale applications.

Channel Bank	
Features	**Benefits**
Supports multiple services and equipment	Data services include: analog modems, dedicated digital data storage (DDS), switched 56, fractional T1 and T1. Voice services include firewire 800, wide area telecommunications service, and tie lines. Connection of voice private branch exchanges (PBX), LAN bridges and routers (V.35, RS232, or RS-530), channel service units (CSU), and mini/mainframe computers are possible.
Drop & insert capabilities	Allows connection of digital signal cross connect level 1 based devices. For example, PBXs with unused DSOs can connect through the Channel Bank while data is inserted.
Dual T1 lines	Two T1 lines can be connected to the channel bank allowing cost savings for larger systems or a backup T1 line for redundancy. If the primary line fails, the secondary line can keep the network operational.
Built-in channel service unit (CSU)	Eliminates the need for an external CSU, saving equipment costs.

404. Basic troubleshooting

You may have the job of maintaining, or helping to maintain, electrical and electronic systems. Some of these jobs may be complex, but even a complex job can be broken down into simple steps. Any repair of electronic equipment should be done in the following order:

1. Symptom recognition. This is the action of recognizing some disorder or malfunction in electronic equipment.
2. Symptom elaboration. Obtaining a more detailed description of the trouble symptom is the purpose of this step.
3. Listing probable faulty functions. This step is applicable to equipment that contains more than one functional area or unit. From the information you have gathered, where could the trouble logically be located?
4. Localizing the faulty function. In this step, you determine which of the functional units of the multi-unit equipment is actually at fault.
5. Localizing trouble to the circuit. You will do extensive testing in this step to isolate the trouble to a specific circuit.
6. Failure analysis. This step has multiple parts. Here, you determine which part is faulty, repair/replace the part, determine what caused the failure, return the equipment to its proper operating status, and record the necessary information in a recordkeeping book for other maintenance personnel in the future. In addition, the technician should reorder any parts used in repair of the faulty equipment.

Sometimes you may have difficulty finding (or troubleshooting) the problem. Some hints that may help are:

- Observe the equipment’s operation for any faults.
- Check for any defective components with your eyes, ears and nose.
- Analyze the cause of the failure for a possible underlying problem.

A good technician can diagnose and repair problems on any equipment or system. However, a successful troubleshooter must be able to diagnose and repair a problem quickly. The key to being a successful troubleshooter instead of just a good technician is equipment familiarization. A successful troubleshooter knows how the equipment behaves, what it sounds like when operating correctly. Knowing how the equipment acts in normal operation allows you to identify when something is not correct.

Visual inspection

Performing a visual inspection of the equipment is sometimes overlooked but is one of the most important steps in troubleshooting. Often you can find the problem by simply doing a thorough visual inspection of the equipment. Do not let the name mislead you. A visual inspection is not only what you can see, it also includes what you smell, hear, or feel. Any troubleshooting that can be performed without the aid of test equipment is part of the visual inspection.

When you begin troubleshooting a problem on a multi-unit system, begin by looking at the system overall. Are there any faults lights or indicators lit? Most systems today are very advanced and provide indications of where faults are located. These indications (fault lights) will greatly reduce the amount of time you spend troubleshooting. Once you have narrowed your search, start looking for obvious problems. Some common visual indications are:

- Fault lights.
- Disconnected wire/cable.
- Burn marks.
- Cracked solder joints (particularly at cable connectors).
- Broken parts.

Do you smell an odor that should not be there? Many times a strange smell can be traced back to a single unit or part that is defective. A power supply that has burned up has a distinctive odor that is different from a motor that has overheated.

Listen to the sounds the equipment is making. Do you hear anything unusual? Is there a screeching sound? Do you hear clicking that should not be there? Do not just listen for abnormal sounds, but also for the absence of sounds. Can you usually hear a motor running that now is not?

Troubleshooting methods

There are many different ways to troubleshoot a circuit. In this section, you will learn the two most common methods used in the field. We will be using figure 1–4 below to illustrate each method of troubleshooting. In the troubleshooting circuit, each unit outputs 24 volts. The 24-volt output of unit 5 turns on a light. The light is not working but you know that the lightbulb itself is not faulty.

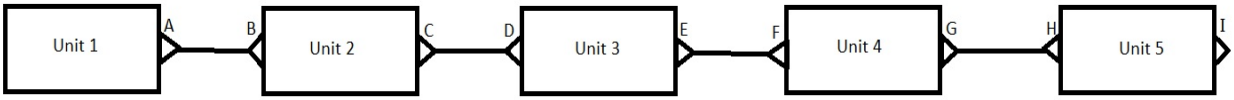

Figure 1–4. Troubleshooting circuit.

Sequential method

The first method most new technicians learn is the sequential method of troubleshooting. During sequential troubleshooting, the technician traces the system path in order, step-by-step, until the problem is found. This method is easier to comprehend. Sequential troubleshooting is commonly used when the technician is not familiar with the circuit being troubleshot. It usually takes more steps to find the problem; therefore, it takes much more time as well. This will be illustrated in the following example:

As the technician on-call, you are told that unit 5 has no output (fig. 1−4). It is your job to diagnose the problem and order a replacement part. You decide to use sequential troubleshooting to determine the problem. Refer to the table below to follow your troubleshooting steps.

Sequential Troubleshooting Method		
Sequence #	**Measurement**	**Result**
Step 1	Check output of unit 1 by measuring for 24 volts direct current (VDC) at point A.	24 VDC
Step 2	Check cable connecting unit 1 to unit 2 by measuring for 24 VDC at point B.	24 VDC
Step 3	Check output of unit 2 by measuring for 24 VDC at point C.	24 VDC
Step 4	Check cable connecting unit 2 to unit 3 by measuring for 24 VDC at point D.	24 VDC
Step 5	Check output of unit 3 by measure for 24 VDC at point E.	24 VDC
Step 6	Check cable connecting unit 3 to unit 4 by measure for 24 VDC at point F.	24 VDC
Step 7	Check output of unit 4 by measuring for 24 VDC at point G	24 VDC
Step 8	Check cable connecting unit 4 to unit 5 by measuring for 24 VDC at point H.	0 VDC Bad cable

Using the sequential troubleshooting method it took you eight steps to determine that the cable, connecting unit 4 to unit 5, is bad. If each step took 5 minutes to complete, it took you 40 minutes to determine that the cable, connecting unit 4 to unit 5, is bad.

Half-split method

The half-split method (also known as the divide-and-conquer approach) is generally used by more experienced technicians. This method is a logical way of applying their system knowledge to isolate the fault. When using the half-split method of troubleshooting, you try to divide the circuit in half with each step. It is essentially a binary progression.

As a technician, you would check the signal at a point in the middle of the system. Is it good or bad? If it is bad, choose a point midway between there and the front of the system. If it is good, pick a point midway between there and the system output. Again, is the signal good or bad? Continue this way while splitting the remaining section and moving toward the bad area until you find the faulty part. Using this divide-and-conquer philosophy, the first action item might be as simple as asking a question or taking a voltage or resistance measurement with a multimeter.

On a complex system, this method saves troubleshooting time by allowing you to eliminate half of the remaining system with each test. What could have taken an hour in a sequential search has taken 10 minutes or less. Let’s troubleshoot the scenario below using the half-split method.

As the technician on-call, you are told that unit 5 has no output (see fig. 1–4). It is your job to determine what the problem is and order a replacement part. You decide to use the half-split troubleshooting method to determine the problem. Refer to the table below to follow your troubleshooting steps.

Half-split Troubleshooting Method		
Sequence #	**Measurement**	**Result**
Step 1	You split the circuit in half by measuring the output of unit 3 for 24 VDC.	24 VDC
Step 2	Split the circuit in half again by measuring the output of unit 4 for 24 VDC.	24 VDC
Step 3	You already know the output of unit 5 is bad because the light does not work. The only place left to check is the input of unit 5 at point H. Measure the input of unit 5 for 24 VDC.	0 VDC Bad cable

As you can see, you were able to diagnose a faulty cable, connecting unit 4 to unit 5, using only three steps. The half-split method greatly reduced the amount of steps involved, which saved you a significant amount of time. This was a simple example troubleshooting a 24 VDC path through five units of equipment. Imagine how much time it would save if the problem existed in a path with hundreds of circuits (units).

This method of troubleshooting can be adapted to troubleshoot any type of equipment. If there is more than one possible solution, you can devise a way to half-split the problem.

Troubleshooting cables

Cables and wiring are a fundamental component of electronics. As a technician, you will be required to diagnose if a cable is working properly or is faulty. Below are methods to troubleshoot the most common types of cables that you will work with.

Single-wire cable

The most basic type of cable is the single-wire cable. It is comprised of a single metallic wire, or strand of wires, that connect point A to point B. A simple continuity test can determine if this cable is operating properly. You can use a multimeter to measure the resistance of the metallic wire in the cable. In order to do this, follow these steps:

1. Select the resistance measurement on the multimeter. It is usually marked with an ohm (Ω) symbol, which is the unit of measurement for resistance.
2. Connect the black multimeter lead to one end of the metallic wire in the cable.
3. Connect the red multimeter lead to the other end of the metallic wire in the cable.
4. When both leads are connected to the cable, the multimeter will send an electrical signal down the wire. The multimeter will measure the strength of the signal and determine how much resistance there is in the cable. A normal metallic cable will have a reading of approximately zero, showing that the signal travels down the entire length of the cable uninterrupted. If there is a break in the cable then the multimeter displays “OL” which indicates an (overload) condition. An overload condition means that the measurement exceeds the capability of the multimeter. In other words, none of the signal reaches the other end of the cable. This means there is a break in the cable.

Multi-wire cable

A multi-wire cable is just several single wire cables bundled together in one sheath. Each individual wire is independently insulated so that each wire can transfer an isolated signal. To troubleshoot a multi-wire cable, you will need to test each wire (or conductive path) individually following the same method as a single wire cable. Each wire will be a colored differently to make identifying the individual wires easier. In the following steps, we will use a multi-wire cable that contains a black, red, white, and green wire. The following procedure must be performed for each wire in the cable.

1. Select the resistance measurement on the multimeter. It is usually marked with an ohm (Ω) symbol, which is the unit of measurement for resistance.
2. Connect the black multimeter lead to one end of the white wire in the cable.
3. Connect the red multimeter lead to the other end of the white wire in the cable. At this point, both multimeter leads must be attached to the same color wire on opposite ends of the cable under test.
4. When both leads are connected to the cable, the multimeter will send an electrical signal down the white wire. The multimeter will measure the strength of the signal and determine how much resistance there is in that wire. A normal metallic cable will have a reading of approximately zero, showing that the signal travels down the entire length of the cable uninterrupted. If there is a break in the cable then the multimeter displays OL. In other words, none of the signal reaches the other end of the cable. This means there is a break in the cable.

5. Leaving the black multimeter lead connected to the white wire, disconnect the red multimeter lead from the white wire, and connect it to each of the other wires individually. Ensure that the resistance reading on the multimeter reads OL for all the other wires. If the multimeter reads anything other than OL then the wires are shorted somewhere in the cable and the cable needs to be replaced. This step is not required in a single wire cable.
6. Disconnect the black multimeter lead and reconnect to another wire in the cable. Repeat steps 1 thru 5 for each wire in the cable.

Coaxial cable

A coaxial cable is one of the most common types of signal cable. A coaxial cable contains and inner conductor and outer conductor separated by insulation (fig. 1–5). The inner conductor is main transmission line and carries the primary signal from point A to point B. The outer conductor, commonly called "shielding," is connected to ground and protects the primary signal from electrical interference. This type cable is usually used in audio, video, and radio frequency transmissions.

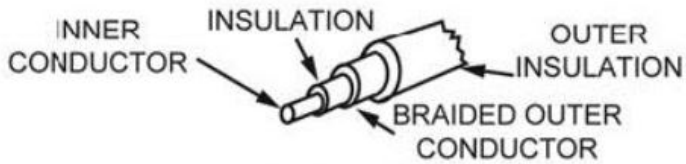

Figure 1–5. Coaxial cable.

Troubleshooting coaxial cable is similar to troubleshooting a multi-wire cable, except there are only two strands in a coaxial cable (one in the center and one on the outside). Follow the procedure below to troubleshoot coaxial cable.

1. Select the resistance measurement on the multimeter. It's usually marked with a Ω symbol, which is the unit of measurement for resistance.
2. Being careful not to touch any other part of the connector, attach the black multimeter lead to the center conductor on one end of the cable.
3. Attach the red multimeter lead to the center conductor on the other end of the cable, again being careful not to touch any other part of the connector.
4. When both leads are connected to the cable, the multimeter will send an electrical signal down the center conductor. The multimeter will measure the strength of the signal and determine how much resistance there is in that wire. A normal metallic cable will have a reading of approximately zero, showing that the signal travels down the entire length of the cable uninterrupted. If there is a break in the cable then the multimeter will display OL. In other words, none of the signal reaches the other end of the cable. This means there is a break in the cable.
5. Disconnect the black multimeter lead from the center conductor and attach to the outer metal connector on one end of the cable.
6. Disconnect the red multimeter lead from the center conductor and attach to the outer connector on the opposite end that is attached to the black multimeter lead.
7. When both leads are connected to the outer connector, the multimeter will send an electrical signal down the outer conductor (shielding). The multimeter will measure the strength of the signal and determine how much resistance there is in the outer conductor. A normal metallic cable will have a reading of approximately zero, showing that the signal travels down the entire length of the cable uninterrupted. If there is a break in the cable then the multimeter will display OL. In other words, none of the signal reaches the other end of the cable. This means there is a break in the cable.

8. Leaving the black multimeter lead connected to the outer connector, disconnect the red multimeter lead, and move it back to the center conductor. Ensure that the resistance reading on the multimeter reads OL. If the multimeter reads anything other than OL then the wires are shorted somewhere in the cable and the cable needs to be replaced.

Self-Test Questions

After you complete these questions, you may check your answers at the end of the unit.

401. Wire color-coding standards

1. What is the purpose of the binder in a telecommunications cable?

2. What is the color code for the “tip” or “primary” color groups?

3. What is the color code for the “ring” or “secondary” cable pairs?

4. What color would the binder be for pair count 101 - 125?

5. What are the colors of the two pairs that are reversed in a T568B network crossover cable?

402. Fiber optic installation

1. Once installed, why is the first four feet of fiber optic cable normally cut off?

2. Why should detergent-based lubricants not be used when placing fiber optic cable?

3. During installation, swivels are used for what purpose?

4. How is fiber optic cable installed through an L-bend?

5. Why should you install vertical runs from the top?

403. Channel bank

1. What is a channel bank?

2. How are monitoring, control, and configuration of the T1 channel bank accomplished? Why is this beneficial?

3. How is a modular design beneficial?

404. Basic troubleshooting

1. Why might the name “visual inspection” be misleading?

2. What is the first troubleshooting method most new technicians learn?

3. Describe the process of performing the sequential troubleshooting method.

4. Describe the process of performing the half-split troubleshooting method.

5. What is the main advantage of the half-split method over the sequential method of troubleshooting?

6. Explain what the multimeter indication “OL” means when troubleshooting a cable.

7. How is troubleshooting a multi-wire cable different than troubleshooting a single-wire cable?

8. What is the one troubleshooting step required for multi-wire cables that is not required for a single-wire cable?

1−2. Grounding, Bonding, Shielding, and Lightning Protection

To obtain optimum performance of electronic equipment and personnel safety, good grounding, bonding and shielding is essential. A sound grounding system will provide adequate protection

against power system faults, electromagnetic pulse (EMP), and lightning strikes. Bonding of metals must be carefully considered on grounding systems. Shielding is needed throughout a building for personnel safety and equipment interference control. For a new facility, requirements in each of these areas are defined to assure that the necessary measures are incorporated into the final structure and equipment installation. In this section, we briefly introduce requirements for each.

405. Grounding

Grounding is the provision of a low-impedance conductive path between the earth and the grounded object. Grounding has three main functions—personnel safety, equipment protection and noise reduction.

- Personnel safety is provided by grounding electrical equipment, buildings, and large metal objects that could conduct dangerous currents. Grounding such items diverts dangerous currents to earth and activates protective devices (such as fuses and circuit breakers) that shut down the affected circuit.
- Equipment is protected by grounding power sources, equipment racks, building structures and other conductive objects. This prevents transient voltages and currents from reaching levels that could damage equipment.
- Electrical noise drops by reducing the difference in voltage potential between equipment and by connecting and lowering the impedance between the signal reference subsystem and the earth electrode subsystem. Noise control may also require other measures such as shielding or filtering of local noise sources.

The facility ground system provides a low-impedance conductive path between the earth and the grounded facility. This system is composed of four subsystems—earth electrode, lightning protection, fault protection, and signal reference.

Earth electrode subsystem

This subsystem provides the connection between the earth and the other subsystems in the facility ground system. All communications facilities are connected to the earth by capacitive coupling (resulting from physical displacement of equipment in relation to the actual ground plane), accidental contact, or intentional connection. The intentional connections make up the earth electrode subsystem. A typical earth electrode subsystem consists of a network of buried conductors (earth electrodes) such as ground rods, metal straps, wires, tubes, grids, plates, sheets, water pipes and well casings.

Lightning protection subsystem

This subsystem provides a safe path to earth for lightning that strikes a facility. A “safe” path means one that bypasses personnel and equipment or objects that would otherwise be injured or damaged. The lightning protection subsystem also indirectly protects the facility from transient voltages propagated on communications and power lines that enter the facility.

Components of the lightning protection subsystem include the following:

- Air terminals (lightning rods), or overhead ground wires, are used to protect structures from direct strikes.
- Down conductors to provide a low impedance path from air terminals to the earth electrode subsystem. This minimizes lightning currents in equipment or structures that are vulnerable to damage from such currents.
- Surge arresters to protect the facility from transient voltages propagated along power and communications lines. Such transients are caused by lightning, EMP and switching operations at power distribution stations.

The fact that tall structures attract lightning is used to protect shorter objects in the immediate area. In effect, a tall structure establishes “zones of protection” around itself (fig. 1–6). At communications sites with an antenna tower, the equipment and power buildings often fall completely within the “cone of protection” of the tower and require no additional protection against lightning. Corners of large buildings, however, may fall outside the cone of protection. In such cases, air terminals 25 to 61 centimeters (cm) (10 to 24 inches) high and spaced not more than 6 meters (m) (20 feet) apart will be installed on the unprotected portion of the roof. Power feeds, communications terminals, storage sheds, administrative buildings, storage tanks, intrusion alarms and perimeter or security lighting may also fall outside a cone of protection. Such structures will be protected with air terminals as noted above, or with overhead ground wires.

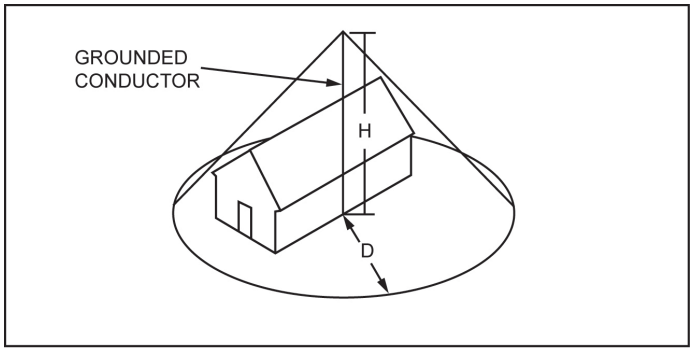

CONE OF PROTECTION PROVIDED BY A VERTICAL GROUNDED CONDUCTOR OF HEIGHT H

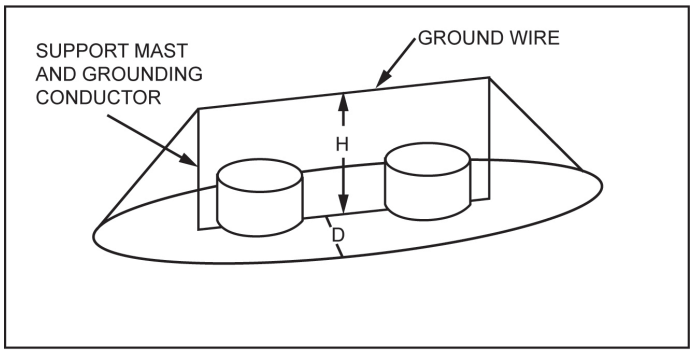

ZONE OF PROTECTION PROVIDED BY A HORIZONTAL AERIAL GROUND WIRE AT HEIGHT H

LEGEND:

D = HORIZONTAL DISTANCE
H = HEIGHT

CDC2EX5X003-0612-001

Figure 1–6. Typical zones of protection.

Fault protection subsystem

This subsystem protects personnel and equipment from voltages caused by faults in electrical circuits. It is sometimes called “the safety ground.” The fault protection subsystem provides grounding conductors that enables protective devices (e.g., fuses, circuit breakers, or ground-fault interrupters) to operate when a circuit fault occurs. Fault protection conductors will be electrically separate from the phase and neutral conductors of the power distribution system. They should also be physically separated from signal conductors and the signal reference subsystem, but should be installed in the same conduit as other power conductors.

Signal reference subsystem

This subsystem is often called, simply, the "signal ground." It establishes a voltage reference for signal circuits and controls electrical noise and static in a facility. Within a piece of equipment, a signal ground may be a bus bar or any conductor that serves as a reference plane of the signal circuits within the equipment. Between pieces of equipment, the signal ground will be a grid or a network of wires, straps, grounded equipment racks, and other conductors. Signal grounds can serve several circuits within a piece of equipment or several pieces of equipment within a facility, as well as interconnecting all C-E equipment within a facility. The signal reference network can be grounded at one point within the facility or at multiple points, depending on the types of equipment and operational frequencies involved.

In modern facilities, the vast majority of signal reference subsystems are multipoint systems. The most common method of establishing a multipoint signal reference subsystem is to bond equipment cabinets, racks, conduit, duct, bus bars, wires, and other conductors to a common interior metal sheet or grid. The resulting network is also known as an "equipotential plane" since all points in the network is at the same potential. The term "equipotential plane" can also be used to refer simply to the sheet or grid (to which the other conductors are connected). Such sheets or grids are usually installed in or on the floor or ceiling of a facility and are connected to the earth electrode subsystem at multiple points.

406. Bonding

This lesson covers the functions of bonding and you are expected to know basic facts and terms about this subject.

Bonding is the establishment of a low-impedance path between two metal surfaces. A good bond is also mechanically strong and resists corrosion and stress. Good bonding is essential in all circuits—both communications and power—as well as in the lightning protection subsystem—where conductors must be joined. Bonds should be made so the mechanical and electrical properties of a path are characterized by the bonds, not merely the junction of the metal surfaces (the junction would have a much higher impedance). Bonds can be made in many ways—by welding, brazing, soldering or, by compression using bolts, nuts, clamps, and special straps.

The term "bond" refers to both the mechanical interface between the joined conductors and bonding straps used to interconnect two separate conductors. The mechanical bond must be strong and the bonding strap must resist deterioration through corrosion or looseness.

Bonds in the earth electrode subsystem normally are direct permanent bonds and do not exceed a resistance of 1 milliohm (mΩ). All bonds in the earth electrode subsystem must be protected against corrosion and mechanical damage.

Bonds of the lighting protection subsystem normally are welded or brazed and Underwriters Laboratories (UL) approved high compression clamping devices may be used. However, exothermic welds or brazing will be used on all bonds not readily accessible for inspection and maintenance. Hardware used in the lightning protection subsystem should be made of metals that do not corrode easily, such as zinc, copper, cadmium, aluminum, and bronze. Do not use soft solder.

Bonds in the fault protection subsystem normally are exothermic welds. Semi-permanent mechanical bonds such as crimps and bolts or bonding straps may be used if exothermic welds cannot be made, and will not exceed a resistance of 12 mΩ. Soft solder will not be used in the fault protection subsystem.

Signal reference bonds normally are direct mechanical bonds such as crimps connectors and bolts or soft solder. Exothermic welding will be used for attachments to the earth electrode subsystem. Figure 1−7 shows a typical example of bonding.

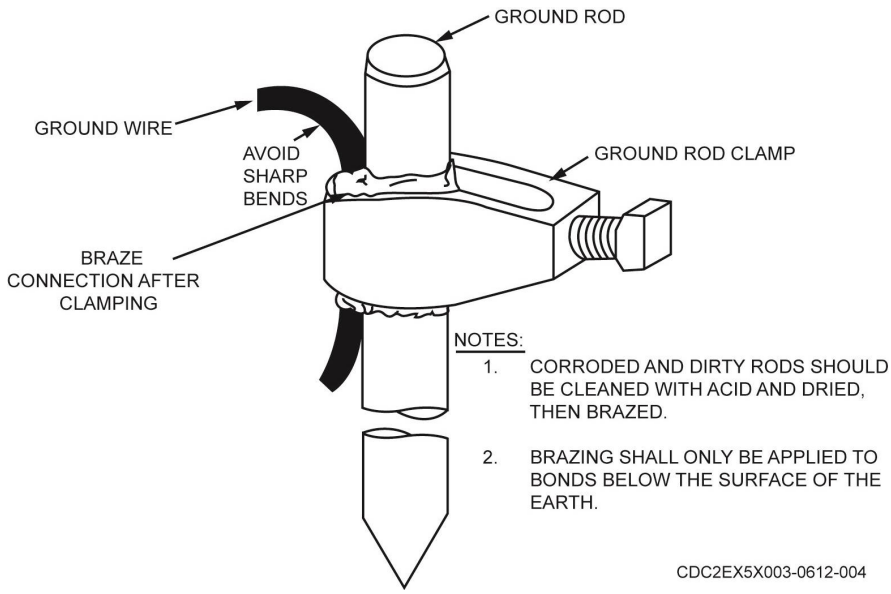

Figure 1–7. Example of bonding.

407. Shielding

Shielding serves two basic functions—to prevent interference between multiple emanating systems (electrical/communications) and minimize compromising emanations. Telecommunications electronics material protected from emanating spurious transmissions (TEMPEST) is the study of electromagnetic emissions from data processing equipment such as computers, networking gear, and printers. Such emissions can be collected and processed to reveal information that is being stored, processed, or displayed.

The effectiveness of a shielded enclosure (or cabinet) is a measure of its ability to attenuate electromagnetic energy. Shielding effectiveness is expressed in decibels (dB) and is determined by measuring the field strength in volts/meters with and without the shield. The overall effectiveness of a shielded enclosure is its ability to prevent the unwanted passage of radiated and conducted electromagnetic signals. Openings such as doors, filters, and air vents must be specially designed and installed to prevent loss of shielding effectiveness.

Shielding the equipment, room, or facility is an excellent way to contain compromising emanations within the inspectable space. Because this method is very expensive, a certified TEMPEST technical authority must validate its use. Shielding is considered in hostile environments where it is known compromising emanations are exploited. Also, consider using shielding in other, less hostile environments where U.S. Government control is extremely limited. Shielding is applied directly to equipment (encapsulation), rooms (shielded enclosure), or facilities (global). There are two standards for shielding effectiveness:

- The Air Force standard for shielding effectiveness (attenuation) for shielded enclosures and global shielding is 50 dB (plus an initial 10-dB allowance for lifetime degradation). Do not install cryptographic equipment or radio equipment in a shielded enclosure.
- The standard for equipment is National Security Telecommunications and Information Systems Security Advisory Memorandum (NSTISSAM)/TEMPEST 1–92, Level I.

Cable shields generally consist of braid, foil, metal wrap, or conduit. A wire twisted around an insulated conductor can be used as a shield. Care must be taken during installation to maintain the

integrity of the shield. The effectiveness of a shield is a function of the conductivity of the metal, strand size, percentage of coverage and size of openings. Multiple layers of shielding are more effective than a single layer. Separating the shields with dielectric material or using special strip braid can further increase effectiveness. Although power leaked by a cable may be a very small percentage of transmitted power, this percentage could cause significant interference to sensitive circuits.

Containing conducted compromising emanations

Evaluating all conductive paths for the escape of compromising emanations is a difficult task because there are so many. There are obvious paths like telephone lines and other signal lines. However, less obvious paths are the power lines (and the electrical metallic tubing they run in), extension cords, signal ground wires, alarm signal lines, fire suppression piping, air conditioning and heating ducts, water pipes, building metallic members, and so forth. Each of these areas must be evaluated based on a number of factors like the threat level, sensitivity of the information, location of the facility on the base relative to the boundary of the inspectable space, and so forth.

RED and BLACK concept

The RED and BLACK concept, by definition, establishes areas for the placement of equipment processing classified information (RED) that are separate and unique from the areas for equipment processing unclassified information (BLACK). The concept has two parts:

- Physical separation. All equipment, wire lines, components, and systems that process classified information are considered RED. All equipment, wire lines, components, and systems that process encrypted classified information or unclassified information are considered BLACK. The RED and BLACK concept is to establish minimum guidance for physical separation to decrease the probability that electromagnetic emissions from RED devices will couple to BLACK systems.
- Electrical separation. Electrical separation ensures that every signal conductor from a RED device is routed to another RED device, or is encrypted before connection to a BLACK device. Electrical separation addresses signal distribution, power distribution, and grounding. Switches and other devices used to interface between RED and BLACK circuits and equipment should exhibit the following port-to-port isolation characteristics:
    - 100 dB over the baseband audio frequency range between 0.3 and 15 kilohertz.
    - 80 dB over the baseband video frequency range of 0-to-5 megahertz (MHz).
    - 60 dB over the frequency range from 1 times the basic data rate to 10 times the basic data rate of the digital signals processed.

RED and BLACK equipment

Equipment is comprised of machines that process information in electronic, electrical, or electromechanical form. As information is processed, current flows in wires and traces in the equipment, electronic circuits change state, switches open and close, solenoids are energized and de-energized, images are created on screens with electron streams, and many other similar actions occur. When these actions take place, emanations are generated. If classified information is processed, then these are compromising emanations. When processing classified information, there are two types of equipment:

- RED equipment processes clear-text classified information.
- BLACK equipment processes encrypted or unclassified information.

Designating equipment as RED or BLACK further ensures the physical and electrical separation requirement. Every RED equipment connects only to RED equipment or the output becomes encrypted prior to connection to BLACK equipment.

408. Lightning protection

Lightning is a random and unpredictable event. Its physical characteristics include current levels sometimes in excess of 400 kiloamperes (kA), temperatures to 50,000 degrees Fahrenheit, and speeds approaching one-third the speed of light. Globally, some 2000 ongoing thunderstorms cause about 100 lightning strikes to earth each second.

Lightning effects can be direct and/or indirect. Direct effects are from resistive (ohmic) heating, arcing and burning. Indirect effects are more probable. They include capacitive, inductive, and magnetic behavior. Lightning "prevention" or "protection" (in an absolute sense) is impossible. A diminution of its consequences, together with incremental safety improvements, can be obtained by the use of a holistic or systematic hazard mitigation approach.

Air terminals

In Benjamin Franklin's day, lightning rods were believed to conduct current away from buildings to earth. Lightning rods, now known as air terminals, are believed to send streamers upward at varying distances and times according to shape, height and other factors. The purpose of air terminals is still to conduct the current from a lightning strike and route it to ground. However, now it is also believed that the streamers from air terminals can actually draw lightning to them. Different designs of air terminals may be employed according to different protection requirements. For example, the utility industry prefers overhead shielding wires for electrical substations. In some cases, no use whatsoever of air terminals is appropriate (example: munitions bunkers). Air terminals do not provide for safety to modern electronics within structures.

Air terminal design may alter streamer behavior. In equivalent e-fields, a blunt pointed rod is seen to behave differently than a sharp pointed rod. Faraday cage and overhead shield designs produce yet other effects. Air terminal design and performance is a controversial and unresolved issue. Commercial claims of the "elimination" of lightning deserve a skeptical reception. Further research and testing is ongoing in order to understand more fully the behavior of various air terminals.

Down conductors, bonding, and shielding

Down conductors should be installed in a safe manner through a known route outside of the structure. They should not be painted, since this will increase impedance. Gradual bends (minimum eight inch radius) should be adopted to avoid flashover problems. Building steel may be used in place of down conductors where practical as a beneficial part of the earth electrode subsystem.

Bonding assures that all metal masses are at the same electrical potential. All metallic conductors entering structures (alternating current [AC]) power; gas and water pipes; signal lines; heating, ventilation and air conditioning (HVAC) ducting; conduits; railroad tracks; overhead bridge cranes; etc.) should be integrated electrically to the earth electrode subsystem. Connector bonding should be thermal, not mechanical. Mechanical bonds are subject to corrosion and physical damage. Frequent inspection and ohmic resistance measuring of compression and mechanical connectors is recommended.

Shielding is an additional line of defense against induced effects. It prevents the higher frequency electromagnetic noise from interfering with the desired signal. It is accomplished by isolation of the signal wires from the source of noise.

Grounding

The grounding system must address low earth impedance as well as low resistance. A spectral study of lightning's typical impulse reveals both a high and a low frequency content. The high frequency is associated with an extremely fast rising "front" approximately 10 microseconds (μs) to peak current. The lower frequency component resides in the long, high-energy "tail" or follow-on current in the impulse. The grounding system appears to the lightning impulse as a transmission line where wave propagation theory applies.

A single point grounding system is achieved when all equipment within the structure(s) are connected to a master bus bar which in turn is bonded to the external grounding system at one point only. Earth loops and differential rise times must be avoided. The grounding system should be designed to reduce AC impedance and DC resistance. The shape and dimension of the earth termination system is more important than a specific value of the earth electrode. The use of counterpoise or "crow's foot" radial techniques can lower impedance as they allow lightning energy to diverge as each buried conductor shares voltage gradients. Ground rings around structures are useful. They should be connected to the facility ground. Exothermic (welded) connectors are recommended in all circumstances.

Cathodic reactance should be considered during the site analysis phase. Manufactured earth additives and backfills are useful in difficult soils circumstances; they should be considered on a case-by-case basis where lowering grounding impedances are difficult and/or expensive by traditional means. Regular physical inspections and testing should be a part of an established preventive maintenance program.

Transients and surges

Ordinary fuses and circuit breakers are not capable of dealing with lightning-induced transients. Lightning protection equipment may shunt current, block energy from traveling down the wire, filter certain frequencies, clamp voltage levels, or perform a combination of these tasks. Voltage clamping devices capable of handling extremely high amperages of the surge, as well as reducing the extremely fast rising edge of the transient are recommended. Adopting a fortress defense against surges is prudent: protect the main panel (AC power) entry; protect all relevant secondary distribution panels; protect all valuable plug-in devices such as process control instrumentation, computers, printers, fire alarms, data recording equipment, and so forth. Further, protect incoming and outgoing data and signal lines. Protect electric devices, which serve the primary asset such as wellheads, remote security alarms, closed circuit television cameras, high mast lighting, and so forth. HVAC vents, which penetrate one structure from another, should not be ignored as possible troublesome electrical pathways.

Surge suppressors should be installed with minimum lead lengths to their respective panels. Under fast rise time conditions, cable inductance becomes important and high transient voltages can be developed across long leads.

In all instances, use high quality, high speed, and self-diagnosing protective components. Transient limiting devices may use a combination of arc gap diverters-metal oxide varistor-silicon avalanche diode technologies. Hybrid devices, using a combination of these technologies, are preferred. Know your clamping voltage requirements. Confirm that your vendor's products have been tested to rigid American National Standards Institute (ANSI)/Institute of Electrical and Electronics Engineers (IEEE)/International Organization for Standardization (ISO) 9000 test standards. Avoid low-priced, bargain products, which proliferate the market.

Self-Test Questions

After you complete these questions, you may check your answers at the end of the unit.

405. Grounding

1. What are the three main functions of grounding?

2. What are the four subsystems of the facility ground system?

3. What facility ground subsystem is also known as the safety ground?

406. Bonding

1. What is bonding?

2. What does the term bond refer to?

3. What is the maximum resistance for bonds in the earth electrode subsystem?

4. What type of bond is *not* allowed for the lighting and fault protection subsystems?

407. Shielding

1. What are the two standards for shielding effectiveness?

2. Name at least three less obvious conductive paths for the escape of compromising emanations.

3. What is considered red equipment?

4. What is considered black equipment?

408. Lightning protection

1. What type of effects is more probable from a lightning strike? What do they include?

2. How do air terminals attract lightning?

3. Why should down conductors not be painted?

4. How can ground impedance be lowered in difficult soil conditions?

5. Transient and surge suppression devices should be tested to what standards?

1−3. Electrostatic Discharge

The most common type of electrostatic discharge (ESD) damage is partial degradation or weakening of the device, rather than complete destruction usually indicated by an open or shorted circuit. This means the part or assembly still works; but the damage is so minute it is virtually undetectable by the technician. The degradation in some devices may not become evident until well into the service life of some devices. This type ESD damage increases the probability of equipment failure during high stress or load conditions. While the technician has the assembly removed for troubleshooting and repair, the device, component, or circuit board passes inspections, possibly only showing slight degradation. When re-installed, the item could fail prematurely, or even worse, operate erratically causing excessive troubleshooting, repair time, and repair costs.

409. Electrostatic discharge principles

What is static electricity? This lesson defines static electricity and provides basic theory and factors for decreasing static electricity in the work place.

Static electricity

Static electricity is a stored electrical charge at rest. An insulated body can store relatively large amounts of static electricity. One extreme example is lightning.

A stored electrical charge of static electricity is due to the transfer of electrons from within the body or from one body to another. One person under the proper conditions may touch many charged items. Each one transfers the charge to him and the charge gradually builds. The quantity of charge accumulated is dependent on the size, shape, composition, and electrical properties of the substances making up the charging and insulated bodies.

This charged potential builds within the insulated body and finally releases, mostly by arcing, to a conductive body of lesser potential. Movement causes static charge to develop. Static electricity as little as 25 volts can damage electronic devices since they are extremely sensitive.

Factors for decreasing electrostatic discharge

Static electricity is most common and usually highest in dry environments. Increased humidity reduces the amount of static charge in a control work center. However, high humidity is not a cure-all for static electricity build-up, nor does it completely reduce static electricity. ESD build-up in higher humidity areas is still large enough to destroy or degrade ESD sensitive items. Here are some more helpful hints for reducing ESD damage:

- Keep materials generating static charge away from ESD sensitive workstations, items, and equipment.
- Maintain a continuous ESD awareness and training program, which includes properly marking ESD items, packaging, and dedicated ESD work area.
- Always assume all unmarked electronic assemblies, subassemblies, and components are likely ESD sensitive. This ensures the protection of all unidentified items and prevents ESD damage.
- Handle all ESD sensitive items at an approved and certified static control workstation.
- Transport and store all ESD susceptible items (both unserviceable/repairable and serviceable) in static shielding and non-charge generating containers.

Static generating sources

Static generating sources should never be close to or used around an ESD workstation. Many items may be generating sources. Some are identified in the table below.

Static Sources	
Object or Process	**Material or Activity**
Work Surfaces	Waxed, painted, or varnished surfaces Common vinyl and plastics Finished wood
Floors	Sealed concrete Waxed, finished wood Common vinyl tile or sheeting High pressure laminates made from insulating materials Carpeted surfaces
Clothing	Common synthetic smocks Common synthetic personal garments Non-conductive or synthetic shoe soles Virgin wool
Chairs	Finished wood Vinyl and plastic Fiberglass Synthetic fabric
Packaging and Handling	Paper products Plastic connector caps or plugs Plastic bags, wraps, envelopes Bubble wrap or foam insulation Plastic trays, tote boxes, vials, parts bins Aged or worn treated anti-static bags, wraps, envelopes Tapes, tape dispensers, stickers
Assemble, Clean, Test and Repair Areas	Polyethylene bags and pouches Spray cleaners Plastic de-soldering tools Ungrounded soldering tools Solvent brushes Drying, vacuuming, or spraying using plastic nozzle tools Plastic tool handles, laminated papers Plastic syringes, ball-point pens Plexiglas and Styrofoam materials Paper products

Static generation voltages

As we use common office supplies, drink from a Styrofoam cup, or complete paperwork while sitting at an ESD workstation, we are or could be generating static electricity.
The amount of static charge a person can withstand is tremendous and can cause severe damaging effects on sensitive electronic parts, circuits, or assemblies. To get a general idea on how much static charge is generated during daily activities refer to the following table for electrostatic voltages.

	Electrostatic Voltage	
	Percent Relative Humidity	
Means of Static Generation	**10 – 20 degrees**	**65 – 90 degrees**
Walking across carpet	35,000	1,500
Walking over vinyl floor	12,000	250
Technician moving at work station	6,000	100
Opening and closing vinyl envelopes	7,000	600
Plastic bag picked up at work station	20,000	1,200
Sitting and sliding in polyurethane chair	18,000	1,800

410. Electrostatic discharge control concepts

Two simple rules will substantially reduce the risk of ESD damage to electrostatic discharge sensitive (ESDS) items:

Rule 1: Handle all ESDS items at an approved static control workstation. ESDS items shall always be handled at a static control workstation or a personnel wrist strap utilized in situations where complete workstations are not feasible.

Rule 2: Transport and store all ESDS items in static shielding and non-charge generating packages or containers. These packages or containers are capable of protecting the inner contents against static fields and discharges. They are also constructed so that the interior surface contacting the packaged item is resistant to the generation of static charge.

Handling electrostatic discharge items

Handle ESD items only at certified ESD workstations and properly test and use wrist straps. Another handling hazard is caused by the inherent static generation qualities of most synthetic military clothing material. All uniform sleeves must be rolled up or shirts removed before entering ESD area or when working on ESD certified workstations.

Special considerations for tactical environments

Tactical and combat communication units have special considerations when handling ESD sensitive items. Wearing the chemical warfare ensemble presents a unique problem with handling ESD sensitive items. Unfortunately, no other method is currently available for maintaining and repairing C-E equipment when wearing the chemical warfare ensemble.

Remember, any amount of movement generates a static charge at a significant enough level to damage ESD sensitive items. Just because a grounding point is touched before handling ESD items, will not guarantee you will be at the same potential after moving around or reaching for the ESD item.

Only under special circumstances may an individual not use protective ESD equipment when handling ESD sensitive items. Personnel removing/installing cables or conductive end-caps without ESD protective equipment must maintain contact simultaneously with the un-energized equipment/assembly chassis while removing and installing.

Using the electrostatic discharge wrist strap

The wrist strap is the most important item when handling ESD sensitive items. Wrist straps must be worn snugly on the wrist, tested daily, and connected to the common point ground system (CPGS) of either the fixed/portable workstation before handling ESD items. Skin lotion may be required to provide a good conductive path between the strap and your skin as indicated during the daily test.

Wrist straps are one of the most inexpensive ESD protective items, and if possible, ordered and issued to all technicians once trained for using the ESD certified working area as an individual issue item.

Marking and packaging electrostatic discharge items

You may see many symbols representing ESD sensitive items. Regardless of which symbol is used, all of these marked items must be treated with ESD protection in mind. In an effort to standardize the identification of all ESD assets, the Air Force is adapting to one symbol. The symbols in Figure 1–8 are the old universal ESD symbol with arrows pointing into a circle, which has been discontinued in accordance with military standard-129 and replaced with the new universal ESD symbol with triangle and reaching hand.

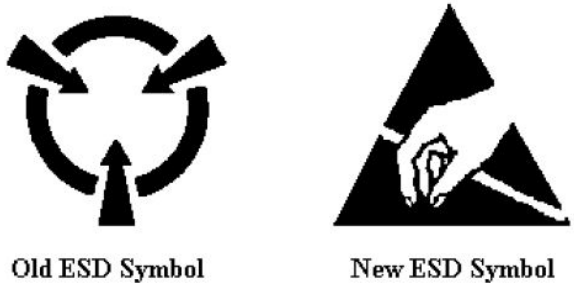

Figure 1–8. Universal ESD symbol.

The universal ESD symbol is displayed in many forms: a sticker, decal, label, or attached to a tag, packaging container, or ESD item. Figure 1–8 displays both the old ESD symbol and the new ESD symbol.

Here is another method of identifying ESD items when received from base supply. The DD Form 1348-1A, Issue Release/Receipt Document, Block 8 (Type Cargo) is coded as a “3” (fig. 1–9) Always check this block on the Issue Release/Receipt Document before opening the received item, and remember to open item on ESD certified workstations.

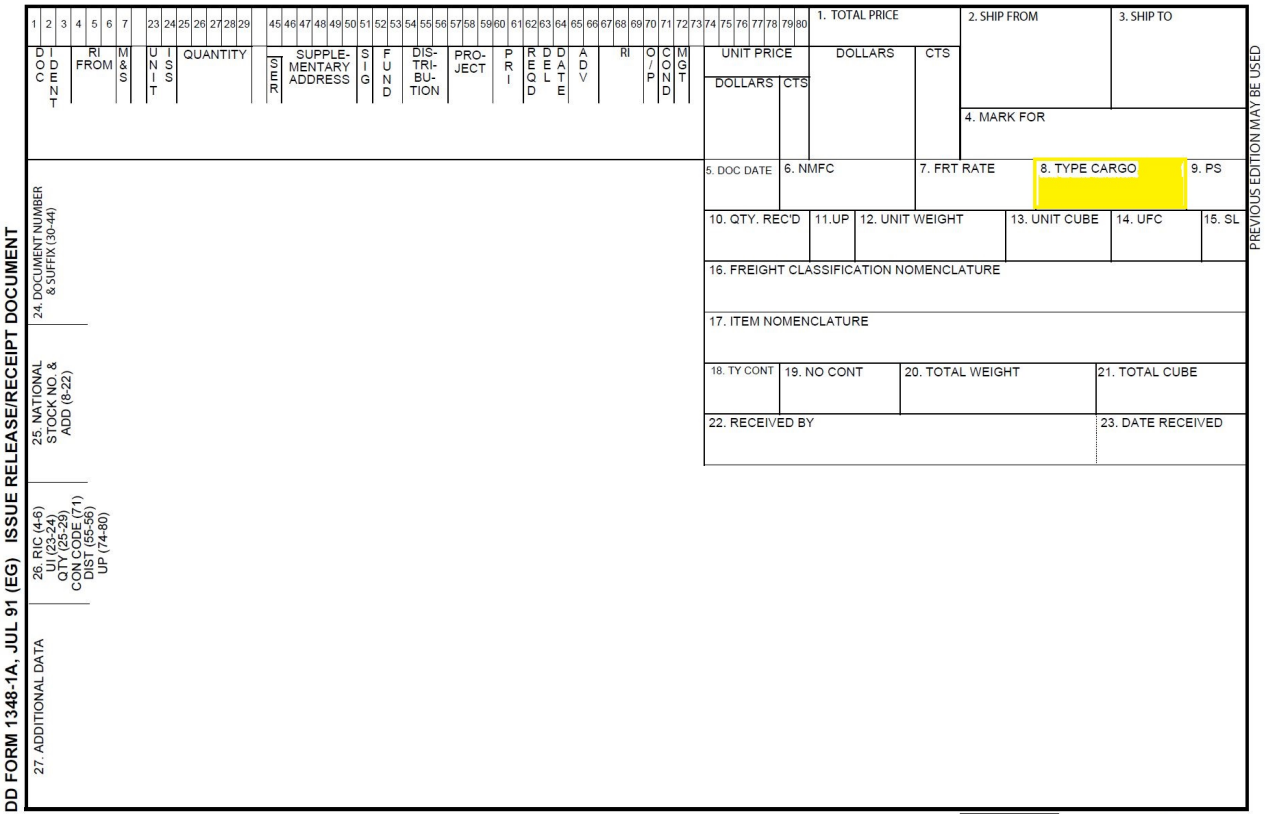

Figure 1–9. DD Form 1348-1A (Type Cargo Block Identified).

Self-Test Questions

After you complete these questions, you may check your answers at the end of the unit.

409. Electrostatic discharge principles

1. Define static electricity.

2. Damage to electronic devices can occur with as little as how many volts?

3. What environment usually produces the highest static electricity?

4. What are five ways to reduce ESD damage?

5. In a 72-degree room, what action produces 1,500 volts of static electricity?

410. Electrostatic discharge control concepts

1. Name two simple rules that will substantially reduce the risk of ESD damage to electrostatic discharge sensitive items.

2. Where should ESD items be handled?

3. What presents a unique problem with handling ESD sensitive items in a tactical environment?

4. What is the most important item when handling ESD sensitive items?

5. How often must ESD wrist straps be tested?

Answers to Self-Test Questions

401

1. To group by spiraling around a specific number of pairs that replicate in color multiple times throughout a cable.
2. White, red, black, yellow, and violet.

3. Blue, orange, green, brown, and slate.
4. White - slate.
5. White/orange and orange; white/green and green.

402

1. To discard the damaged fiber that will result from the pulling process during installation.
2. Most detergents will promote stress cracks when used on polyethylene.
3. The use of pulling swivels is required to prevent the pull line from placing an unnatural or excessive twist on the cable as it is being pulled through the innerduct.
4. It should be pulled out of the L-bend and then “back-fed” into the conduit system.
5. By allowing gravity to do its work, less stress is placed on the cable.

403

1. A menu-driven, programmable TDM that combines 24 channels of voice or data service into a standard 1.544 Mbps trunk.
2. Monitoring, control and configuration of the T1 channel bank is accomplished remotely via a VT100 or VT52 terminal. This is beneficial because it reduces the need to set switches manually on the plug-in cards. You can also connect several sites together and control them from one central location.
3. It allows expansion with minimal cost. Cards can be added as the network grows.

404

1. A visual inspection is not only what you can see, it also includes what you smell, hear, or feel.
2. Sequential troubleshooting method.
3. During sequential troubleshooting, the technician traces the system path in order, step-by-step, until the problem is found.
4. When using the half-split method of troubleshooting you try to divide the circuit in half with each step. You would check the signal at a point in the middle of the system; if it’s good pick a point midway between there and the system output. Again, is the signal good or bad? Continue this way, always splitting the remaining section, and moving toward the bad area until you find the faulty part.
5. The half-split method of troubleshooting greatly reduces the amount of steps when compared to sequential troubleshooting. This saves a significant amount of time diagnosing the problem.
6. OL means “over load.” This measurement is outside the measuring capabilities of the multimeter. In other words, there is a break in the cable.
7. To troubleshoot a multi-wire cable you will need to test each wire (or conductive path) individually, following the same method as a single wire cable.
8. You will need to ensure there is no continuity between the wire under test and any other wire (or conductive path) in the cable.

405

1. Personnel safety, equipment protection, and noise reduction.
2. The earth electrode subsystem, lightning protection subsystem, fault protection subsystem, and the signal reference subsystem.
3. The fault protection subsystem.

406

1. The establishment of a low-impedance path between two metal surfaces.
2. Both the mechanical interface between the joined conductors and bonding straps used to interconnect two separate conductors.
3. It should not exceed a resistance of 1 mΩ.
4. Soft solder.

407

1. For shielded enclosures and global shielding is 50 dB. The standard for equipment is (NSTISSAM)/TEMPEST 1–92, Level I.
2. The power lines (and the electrical metallic tubing they run in), extension cords, signal ground wires, alarm signal lines, fire suppression piping, air conditioning and heating ducts, water pipes, building metallic members, etc.
3. Equipment that processes clear-text classified information.
4. Equipment that processes encrypted or unclassified information.

408

1. Indirect effects are more probable. They include capacitive, inductive, and magnetic behavior.
2. Streamers send upward at varying distances and times draw lighting to them.
3. Down conductors should not be painted because it will increase impedance.
4. Manufactured earth additives and backfills can be added to the soil to lower grounding impedances.
5. Transient and surge suppression devices should be tested to rigid ANSI/IEEE/ISO 9000 test standards.

409

1. Static electricity is a stored electrical charge at rest.
2. 25-volts.
3. Dry environments.
4. (1) Keep materials generating static charge away from ESD sensitive workstations, items, and equipment; (2) Maintain a continuous ESD awareness and training program, which includes properly marking ESD items, packaging, and dedicated ESD work area; (3) Always assume all unmarked electronic assemblies, subassemblies, and components are likely ESD sensitive; (4) Handle all ESD sensitive items at an approved and certified static control workstation; (5) Transport and store all ESD susceptible items (both unserviceable/reparable and serviceable) in static shielding and non-charge generating containers.
5. Walking across carpet.

410

1. (1) Handle all ESDS items at an approved static control workstation; (2) Transport and store all ESDS items in static shielding and non-charge generating packages or containers.
2. Handle ESD items only at certified ESD work stations and properly test and use wrist straps.
3. Wearing the chemical warfare ensemble presents a unique problem with handling ESD sensitive items.
4. The wrist strap.
5. Daily.

Complete the unit review exercises before going to the next unit.

Unit Review Exercises

Note to Student: Consider all choices carefully, select the *best* answer to each question, and *circle* the corresponding letter. When you have completed all unit review exercises, transfer your answers to the Field-Scoring Answer Sheet.

Do not return your answer sheet to the Air Force Career Development Academy (AFCDA).

1. (401) The thin plastic colored tape that spirals around a specific number of pairs that replicate in a cable is called a
   a. marker.
   b. bundle.
   c. casing.
   d. binder.

2. (401) In telecommunications cables, the "tip" or "primary" color group order is
   a. blue, orange, green, brown, and slate.
   b. blue, green, yellow, red, and orange.
   c. white, red, black, yellow, and violet.
   d. white, blue, green, yellow, and violet.

3. (401) What colors make up the "ring" or "secondary" color code for telecommunications cables?
   a. Blue, orange, green, brown, and slate.
   b. Blue, green, yellow, red, and orange.
   c. White, red, black, yellow, and violet.
   d. White, blue, green, yellow, and violet.

4. (401) What standard do most newly installed network cables follow?
   a. N586B.
   b. N568C.
   c. T586C.
   d. T568B.

5. (401) Two types of network cables are
   a. straight through and crossover.
   b. straight through and flip/flop.
   c. high and low baud.
   d. "n" and "g."

6. (402) How do you determine which type of fiber optic cable lubricant to use during installation?
   a. Always use a high detergent based lubricant.
   b. Refer to the manufacturers product data.
   c. Cable lubricants should not be used.
   d. Use a lubricant that dries quickly.

7. (402) What device is used to secure the pulling line to the strength members of the cable?
   a. Pulling grip.
   b. Raceway.
   c. Conduit.
   d. Swivel.

8. (402) When installing fiber optic cable on a horizontal run, the cable must be secured every
   a. 18 inches.
   b. 24 inches.
   c. 36 inches.
   d. 48 inches.

9. (403) How is unauthorized access to the configuration screens of a channel bank prevented?
   a. Key card.
   b. Biometric access.
   c. Password protection.
   d. No additional security is needed because they are only used in secure environments.

10. (403) Why is it important for a channel bank to have a modular design?
   a. It allows connection of single based devices.
   b. It allows expansion with minimal cost.
   c. It makes routine maintenance easier.
   d. Leased lines are less expensive.

11. (404) Any repair of electronic equipment should begin with
   a. failure analysis.
   b. troubleshooting.
   c. symptom recognition.
   d. listing probable faulty functions.

12. (404) Which troubleshooting method traces the system path, in order, step-by-step, until the problem is found?
   a. Linear.
   b. Half-split.
   c. Sequential.
   d. Divide and conquer.

13. (404) Which troubleshooting method divides the circuit in half with each step?
   a. Linear.
   b. Half-split.
   c. Sequential.
   d. Divide and conquer.

14. (404) What test can determine if a cable is operating correctly?
   a. Capacitance.
   b. Inductance.
   c. Continuity.
   d. Voltage.

15. (404) What additional step is required when troubleshooting a multi-wire cable that is not required when troubleshooting a single-wire cable?
   a. Ensure no continuity of the ground wire.
   b. Ensure continuity between the center conductor and the connector.
   c. Ensure no continuity between the wire under test and any additional wire.
   d. Ensure continuity between the wire under test and all additional wires in the cable.

16. (404) A reading of zero during a continuity test indicates
   a. there is a break in the cable.
   b. there is a short between two wires in the cable.
   c. the signal does not make it to the end of the cable.
   d. the signal travels down the entire length of the cable uninterrupted.

17. (405) What are the three main functions of *grounding*?
   a. Personnel safety, equipment protection, and noise reduction.
   b. Signal amplification, personnel safety, and emissions security.
   c. Equipment protection, signal amplification, and capacitance reaction.
   d. Corrosion prevention, emissions security, and over-voltage protection.

18. (405) Which facility ground subsystem uses surge arrestors?
    a. Earth electrode.
    b. Fault protection.
    c. Signal reference.
    d. Lightning protection.

19. (405) What facility ground subsystem is also called the *safety ground*?
    a. Earth electrode.
    b. Signal reference.
    c. Fault protection.
    d. Lightning protection.

20. (406) Establishing a *low-impedance path* between two metal surfaces is called
    a. bonding.
    b. shielding.
    c. annealing.
    d. grounding.

21. (406) Bonds in the earth electrode subsystem normally are direct permanent bonds and *do not* exceed a resistance of how many milliohms (mΩ)?
    a. 1.
    b. 2.
    c. 5.
    d. 10.

22. (406) What kind of bond is normally applied to signal reference bonds?
    a. None.
    b. Brazing.
    c. Welding.
    d. Mechanical.

23. (407) The two basic functions of shielding are to
    a. equalize all electronic systems to the same potential and minimize compromising emanations.
    b. prevent interference between multiple emanating systems and minimize compromising emanations.
    c. equalize all electronic systems to the same potential and block all emanations from exiting a secure facility.
    d. prevent interference between multiple emanating systems and block all emanations from exiting a secure facility.

24. (407) The designation RED is applied to equipment processing what type information?
    a. Clear-text classified.
    b. Encrypted classified.
    c. Clear-text unclassified.
    d. Unencrypted unclassified.

25. (408) What is believed to draw lightning to air terminals?
    a. Down conductors.
    b. Transients.
    c. Streamers.
    d. Shielding.

26. (408) What assures that all metal masses are of the same electrical potential?
    a. Bonding.
    b. Shielding.
    c. Transients.
    d. Grounding.

27. (408) At how many points should the external grounding system be bonded?
    a. Eight.
    b. Four.
    c. Two.
    d. One.

28. (409) A stored electrical charge at rest is referred to as
    a. static electricity.
    b. magnetic flux.
    c. capacitance.
    d. inductance.

29. (409) Extremely sensitive electronic devices can be damaged by as little as how many volts?
    a. 5.
    b. 15.
    c. 25.
    d. 35.

30. (409) Always assume all unmarked electronic assemblies, subassemblies, and components are likely
    a. protected against electrostatic discharge.
    b. sensitive to electrostatic discharge.
    c. immune to electrostatic discharge.
    d. safe to handle unprotected.

31. (410) Items sensitive to electrostatic discharge (ESD) must only be handled
    a. at certified ESD workstations using a wrist strap.
    b. at certified ESD workstations, a wrist strap is not required.
    c. with a wrist strap.
    d. in a faraday cage.

32. (410) What item is the most important when handling items sensitive to electrostatic discharge (ESD)?
    a. Proper ESD marking.
    b. ESD workstation.
    c. Wrist strap.
    d. ESD mat.

Please read the unit menu for unit 2 and continue ➔

Student Notes

Unit 2. Meteorological Systems

2–1. Meteorology 2–1
411. Meteorological fundamentals 2–1
412. Meteorological measurements 2–3
2–2. Weather Systems 2–7
413. WSR–88D Next Generation Radar 2–7
414. AN/TMS–2 Portable Doppler Radar 2–11
415. AN/FMQ–19 Automated Meteorological Station 2–16
416. AN/FMQ–22 Automated Meteorological Station 2–23
417. AN/FMQ–23 Automated Meteorological Station 2–26

METEOROLOGICAL SYSTEMS are a very important maintenance responsibility for the career field. The capability to forecast current and future weather conditions is vital to the safe planning and execution of all Air Force flying missions. This unit first focuses on meteorological terms and how these parameters are measured. The last section of this unit explains several types of weather systems that collect environmental data and assist in providing responsive, reliable, accurate, and real-time weather information to support flight operations.

2–1. Meteorology

Before knowing how to take a certain weather measurement, you need to know why the measurement parameter is necessary. Many parts make up a total weather observation. First, these meteorological fundamentals will be discussed to give you an idea of how and why they are important. Then, the measurements of these parameters will be discussed.

411. Meteorological fundamentals

This section will cover the different elements that make up weather. The most important parameters will be discussed; temperature and dew point, wind, visibility, barometric pressure, and cloud height.

Temperature and dew point

Temperature and dew point play a key role in weather forecasting and aviation. Forecasters use temperature and dew point to predict changes in weather patterns. They use this information to tell pilots if it is safe to fly. Air temperature is intertwined with air density, which determines the lifting capacity of an aircraft. It is also important to know if frost will form on an aircraft so deicing procedures can be implemented.

Temperature

Temperature is the measure of the average kinetic energy of the molecules in the air. It is commonly measured according to the Fahrenheit (F) and Celsius (C) scales. The temperature of the air is sometimes called ambient temperature. This means air is freely moving about, unaffected by controlled heating or cooling sources. Maximum and minimum temperatures are the highest and lowest temperature recorded and measured during a specified time.

Dew point

The dew point indicates the temperature to which a given parcel of air must be cooled, with constant water vapor content and pressure, to reach saturation. The dew point is important because it is the temperature beyond which further cooling produces visible condensation. When air cools to its dew point through contact with a surface that is colder than the air, water will condense on the surface. When the temperature is below the freezing point of water, the dew point is called the frost point—as

frost is formed rather than dew. The measurement of the dew point is related to humidity. A higher dew point means there will be more moisture in the air.

The difference between the actual air temperature and the dew point temperature is an indication of how close the air is to becoming saturated. This temperature difference is commonly called the spread, or dew point depression. Relative humidity increases as the temperature spread (dew point depression) decreases until the relative humidity becomes 100 percent when the dew point spread is 0 degrees (°). Aviation hourly weather reports regularly include the dew point temperature.

Be alert for fog or low cloud formations any time the surface air temperature is within 4° F of the dew point, and the spread between the two is decreasing. Generally, this condition is optimal during late night and early morning hours. On the other hand, when the difference between the two temperatures is increasing, existing fog and low clouds will likely dissipate because water vapor is evaporating into the warming air. This is often true in the morning hours, when air temperature is increasing as the day progresses. Be aware, however, that fog and low clouds may form two to three hours after sunrise if there is a layer of moist air in the first few hundred feet above the surface.

During clear, still nights, aircraft surfaces often cool by radiation to a temperature equal to the dew point of the adjacent air. The moisture or dew collects on the airframe surface just as it does on a pitcher of ice water in a warm room. The moisture comes from the air in direct contact with the cool surface. Often heavy dew is observed on grass or plants when there is none on the pavements or on large solid objects, since large objects absorb so much heat during the day. Their temperature falls slowly, and the temperature may not cool below the dew point of the surrounding air during the night.

Wind

Wind is the horizontal motion of the air past a given point. In meteorology, winds are often referred to according to their strength and the direction from which the wind is blowing. Short bursts of high-speed wind are termed gusts. Strong winds of intermediate duration (around one minute) are termed squalls. Long-duration winds have various names associated with their average strength, such as breeze, gale, storm, and hurricane. Wind occurs on a range of scales, from thunderstorm flows lasting minutes, to local breezes generated by heating of land surfaces and lasting a few hours. The term “wind” includes five distinctive parameters and associated observation standards—direction, speed, gusts, peak wind speed, and wind shift. Wind direction, speed, and gusts are determined at all locations. All other wind related parameters are determined at the discretion of the base weather function.

Visibility

Visibility is a measure of the opacity of the atmosphere and is a measure of the distance at which an object or light can be clearly discerned. In extremely clean air, in arctic or mountainous areas, the visibility can be up to 100 miles where there are large markers such as mountains or high ridges. However, visibility is often reduced somewhat by air pollution and high humidity. Various weather stations report this as haze (dry) or mist (moist). Fog and smoke can reduce visibility to near zero, making driving extremely dangerous. The same can happen in a sandstorm in and near desert areas, or with forest fires. Heavy rain (such as from a thunderstorm) not only causes low visibility, but the inability to brake quickly due to hydroplaning. Blizzards (blowing snow) are also defined in part by low visibility.

Barometric pressure

Atmospheric pressure is the force exerted by the atmosphere at a given point. For our discussion, the term “barometric pressure” refers to the actual pressure sensor value. The sensor value may be a station pressure, an altimeter setting, or simply a direct pressure value without applied corrections, depending on the type of sensor. The three parameters are described in the table below.

Pressure Parameters	
Type	**Description**
Station pressure	Atmospheric pressure at the designated station elevation.
Altimeter setting	Value to which an aircraft altimeter scale is set so that it will indicate the altitude above mean sea level of an aircraft on the ground at the location for which the value was determined.
Sea-level pressure	Value obtained by the theoretical reduction of barometric pressure to sea level. Where the Earth's surface is above sea level, assume that the atmosphere extends to sea level below the station and that the properties of that hypothetical atmosphere relates to conditions observed at the station.

Cloud height

Cloud height is one part of a more complex forecasting fundamental called sky condition. For our purposes, we will limit this discussion to only those terms related to parameters measured by our sensors.

The ceiling is the lowest layer aloft reported as broken or overcast, or the vertical visibility into an indefinite ceiling. A ceilometer is the instrument that uses lasers to measure the height of layers aloft. It reports cloud height in feet above the Earth's surface in terms of hundreds of feet. Cloud levels 50 feet or below are reported as 000.

412. Meteorological measurements

Most weather measurements at a base or location will be made by specialized weather equipment. As a Radar, Airfield & Weather Systems technician, you will be required to maintain most of this equipment. Now that you have an idea of what parameters are important to forecasting weather, let's look at how these measurements are taken.

Temperature and dew point measurements

We are concerned with four temperature/dew point parameters and associated observing standards—temperature, dew point, and maximum and minimum temperature. The method of obtaining temperature and dew point varies according to the system in use at your location. You may read the data directly from digital or analog readouts, or calculate from other measured values. You determine the temperature and dew point sensor range for the base weather function by considering local climate history. Most of the systems that you will maintain will have a separate temperature/dew point sensor that will calculate the following readings and values.

To calculate the dew point, we use:

- Dry-bulb temperature.
- Wet-bulb temperature.
- Wet-bulb depression.

Dry-bulb temperature

This is the ambient temperature registered by an ordinary dry-bulb thermometer. It is identical with the temperature of the air and may be used in that sense.

Wet-bulb temperature

The wet-bulb temperature of the air is the temperature as measured by a wet-bulb thermometer. A wet-bulb thermometer is an ordinary dry-bulb thermometer whose bulb is enclosed in a wetted sac or wick. The wet-bulb is the temperature an air parcel would have if cooled to saturation at constant pressure by evaporation of water into it. It differs from the dry-bulb temperature by an amount

dependent on the moisture content of the air and, therefore, is generally the same as or lower than the dry-bulb temperature.

Wet-bulb depression

Wet-bulb depression refers to the difference between the wet-bulb and dry-bulb temperatures. You use the dry-bulb temperature and the wet-bulb depression to calculate the dew point. When you have determined the value of the dew point, it is possible to calculate the relative humidity.

Wind measurements

As stated earlier, the term "wind" includes five distinctive parameters and associated observation standards—direction, speed, gusts, peak wind speed, and wind shift. The process for measuring these parameters is described in the table.

Wind Parameters	
Type	**Description**
Direction	Bearing from which the wind is blowing. Determine wind direction by averaging the direction over a 2-minute period. When the wind direction sensor(s) is out of service, at designated stations, the direction may be estimated by observing the wind cone or tee, movement of twigs, leaves, smoke, or by facing into the wind in an unsheltered area. Consider the wind direction *variable* if, during the 2-minute evaluation period, the wind speed is 6 knots or less. In addition, consider the wind direction variable if, during the 2-minute evaluation period, it varies by 60° or more when the average wind speed is greater than 6 knots.
Speed	Rate, in knots, at which the wind passes a given point. Determine wind speed by averaging the speed over a 2-minute period.
Gusts	Description of the variability of the wind speed. Examine wind speed data for the most recent 10 minutes to evaluate the occurrence of gusts. Gusts are indicated by rapid fluctuations in wind speed with a variation of 10 knots or more between peaks and lulls. The speed of a gust is the same as the maximum instantaneous wind speed.
Peak wind speed	Maximum instantaneous wind speed measured. Peak wind data is determined with wind speed recorders. The peak wind speed is the maximum instantaneous speed measured since the last aviation routine weather report.
Wind shift	A change in wind direction. A wind shift is indicated by a change in wind direction of 45° or more in less than 15 minutes with sustained winds of 10 knots or more throughout the wind shift.

Wind monitors are usually mounted on top of a tilting tower in a weather observing station. This monitor group measures wind speed and direction at a full 360° and winds speeds up to 200 miles per hour (mph). A more detailed measurement and calculation procedure will be explained in the sensor descriptions of the weather systems section.

Visibility measurements

Most automated weather stations use a calibrated sensor, which is located approximately 10 feet above the ground. The sensor samples a small volume area and extrapolates the sampled value to become the prevailing visibility value. The sensor is usually located near the touchdown zone of the primary designated runway.

Visibility parameters

The appropriate visibility value is arrived at by using standard algorithms to convert an automated, instrumentally derived sensor visibility value. This is considered representative of the visibility near the airfield runway complex. The four visibility parameters are described in the table.

Visibility Parameters	
Type	**Description**
Prevailing	Representative visibility conditions at the location using the greatest distance seen throughout at least half the horizon circle. It is *not* necessarily continuous.
Sector	Visibility in a specified direction that represents at least a 45° arc of the horizon circle.
Surface	Prevailing visibility determined from a standard point of observation.
Tower	Prevailing visibility determined from the air traffic control tower at locations also reporting surface visibility.

A more detailed measurement and calculation procedure will be explained in the sensor descriptions of the weather systems section.

Runway visual range

Runway visual range (RVR) is an instrumentally derived value based on standard calibrations, which is used to determine the field condition for takeoffs and straight-in approaches to a runway. RVR is calculated by a transmissometer near the touchdown point of the instrument runway and is calculated from visibility, ambient light level, and runway light intensity. The RVR sensors are located alongside and about 14 feet higher than the center line of the runway. RVR gives the horizontal distance pilots see down the runway from the approach end during periods of reduced visibility. It is based either on the sighting of high intensity runway lights or on the visual contrast of visual targets, whichever yields the greatest visual range.

RVR is reported when the prevailing visibility is one statute mile (SM) or less and/or the RVR for the designated runway is 6,000 feet (1,830 meters) or less. RVR data is read on digital displays inside the weather station. RVR is reported in either feet or meters as determined by country.

Barometric pressure/altimeter measurements

Each weather station establishes a location standard barometer, traceable to the standard defined by the National Institute of Standards and Technology. In addition, each location establishes a system of routine barometer comparisons to determine corrections required to keep the station's pressure sensors within the required accuracy.

Station pressure is determined by adjusting the corrected barometric pressure to compensate for the difference between the height of the barometer and the designated station elevation.

At designated stations, computed sea-level pressure is determined by adjusting the station pressure to compensate for the difference between the station elevation and sea level. Base this adjustment on the station elevation and the 12-hour mean temperature at the station. The 12-hour mean temperature is the average of the current ambient temperature and the ambient temperature 12 hours ago.

Determine altimeter setting either directly from an altimeter setting indicator or compute from the station pressure by applying a correction for the difference between the station elevation and field elevation in the standard atmosphere. Where the difference is 30 feet or less, agencies may use constant correction.

More detailed measurement and calculation procedures will be explained in the sensor descriptions of the weather systems section.

Cloud height measurements

Cloud height is usually measured by a ceilometer. The information obtained from ceilometers is crucial to aircrews and weather forecasters. A typical ceilometer uses laser radiation for detecting cloud levels. Most laser ceilometers are classified as a class I laser device when used in normal operational conditions. This means that a laser ceilometer installed in a field environment, with instrument covers on, poses no established biological hazard to humans. The ceilometer fires laser pulses directly up, then measures the elapsed time until any reflected pulses return to the set. That time, multiplied by the speed of light and divided by two, gives you the height of the cloud reflecting the pulse. Most ceilometers have a measurement range between 30 and 25,000 feet.

More detailed measurement and calculation procedures will be explained in the sensor descriptions of the weather systems section.

Self-Test Questions

After you complete these questions, you may check your answers at the end of the unit.

411. Meteorological fundamentals

1. Define temperature.

2. What happens to fog when the temperature spread between the surface air temperature and dew point increases?

3. What two factors are usually described when referring to a wind measurement?

4. Describe visibility.

5. Name the three types of barometric pressure sensor readings.

412. Meteorological measurements

1. What three parameters are used in dew point calculations?

2. Name the five distinctive parameters and associated observation standards that describe the term “wind.”

3. What visibility parameter is the prevailing visibility determined from a standard point of observation?

4. What three field conditions are used to calculate the RVR?

5. What does each location establish to determine barometric corrections are kept within the required accuracy?

6. What is the measurement range of most ceilometers?

2–2. Weather Systems

Just like communications equipment, the weather systems that you will maintain depend upon your location. Some locations have upgraded to newer systems and others still perform well with older, legacy equipment. This section will describe some of the most prevalent weather systems maintained in the career field. These systems provide accurate weather information but each is designed to help with mission criteria.

413. WSR–88D Next Generation Radar

The WSR–88D Next Generation Radar (NEXRAD) is one of the most powerful and advanced weather surveillance Doppler radars in the world. Since first being built and tested in 1988, it has been installed and used operationally at over 160 locations across the United States, including Alaska and Hawaii. The WSR–88D has also been installed in Puerto Rico and several islands in the Pacific.

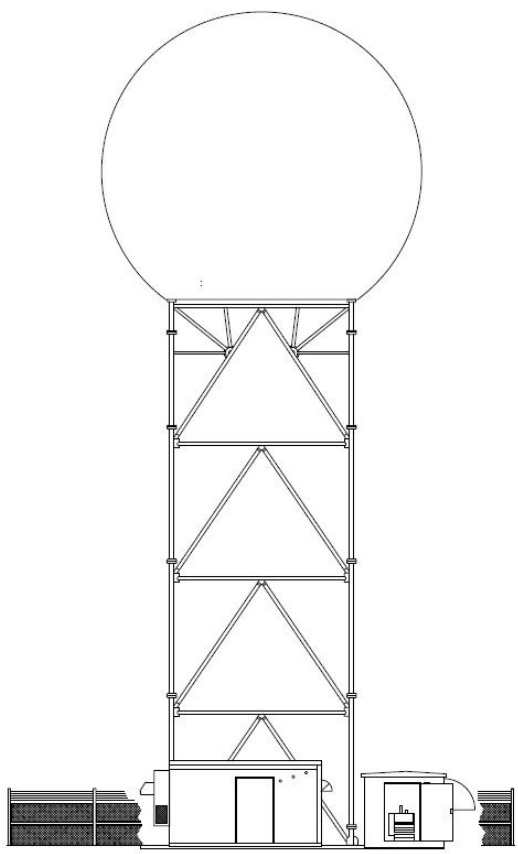

Figure 2–1. WSR–88D.

The WSR–88D is a high-powered radar transmitting at a peak power of 700 kilowatts (kW) at the klystron output. This power enables a beam of energy generated by the radar to travel long distances, and detect many kinds of weather phenomena. It also allows energy to continue past an initial shower or thunderstorm near the radar, thus seeing additional storms farther away. Many other radar systems do not have this kind of power, nor can they look at more than one “slice” of the atmosphere. During severe weather, the WSR–88D is looking at 14 different elevations every 5 minutes, generating a radar image of each elevation.

Capabilities and limitations

The WSR–88D (fig. 2–1) is a stand-alone system that detects, processes, distributes, and displays radar weather data. It uses dual polarization Doppler radar technology to acquire particle velocity data in addition to range, direction, reflectivity data, differential reflectivity, differential phase, and correlation coefficient.

The NEXRAD is a software driven system. Software processing is used to control the radar operating characteristics to produce the optimum radar volume coverage pattern and to optimize the radar returns. The resulting base weather data is then processed through the application of meteorological algorithms to generate base and derived weather products. These products are further processed using graphics algorithms to produce readily interpretable weather data displays on color monitors. The WSR–88D supports the needs of user agencies within the DOD, Department of Commerce (DOC), and Department of Transportation (DOT) for information on the location, intensity, and movement of both routine and hazardous weather phenomena.

The following table outlines the major capabilities and limitations of the system. Further information can be found in technical order (TO) 31P1–4–108–1–WA–1, *System Description Manual - WSR-88D Doppler Meteorological Radar.*

WSR–88D Capabilities and Limitations	
Transmitter Characteristics	
Frequency	2700 to 3000 MHz
Power	700 kW peak at klystron output
Transmitter to antenna loss	1.5 to 2.5 dB depending on tower height and frequency
Average power	300 to 1300 watts
Pulse widths	1.57 and 4.71 μs
Receiver Characteristics	
Detection	Digital intermediate frequency (IF) with 16 bit analog/digital conversion of IF at 100 MHz
Dynamic range	93 dB minimum required
Intermediate frequency	57.55 MHz
System noise figure	2.7 dB
Receiver noise	–114 decibels referenced to a milliwatt standard (dBm) (short pulse), –118 dBm (long pulse)
Antenna Characteristics	
Type	Parabolic dish (28 feet in diameter) with center feedhorn
Polarization	Dual (simultaneous horizontal and vertical transmit/receive)
Gain at 2850 MHz	45.5 dB (including radome loss)
Beamwidth at 2850 MHz	0.925°
Radome	Fiberglass foam sandwich frequency tuned, 39 foot truncated sphere
Radome two-way loss	0.24 dB at 2850 MHz

Theory of operation

Since the WSR–88D supports the needs of many users, the equipment group locations, equipment complement, equipment arrangement, and computer programs vary from site to site. As a result, each WSR–88D installation may be unique. In its basic form, the WSR–88D is functionally subdivided into five equipment groups: the radar data acquisition (RDA) group, wideband communications (WBC) group, radar product generator (RPG) group, master system control function (MSCF) workstation, and principal user systems. Refer to figure 2–2 for a visual example of how these groups could be configured at a location.

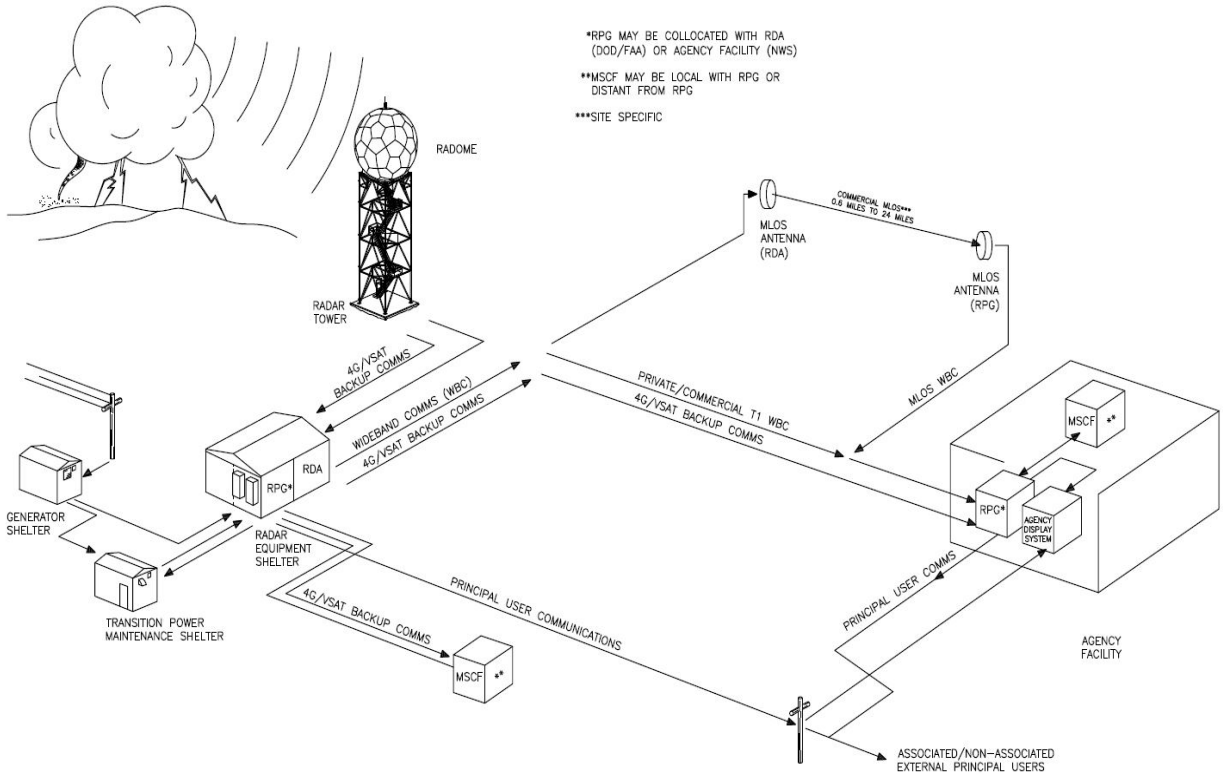

Figure 2–2. Example of NEXRAD group locations.

Radar data acquisition group

The RDA is the Doppler radar subsystem, which generates and radiates radio frequency (RF) pulses, then acquires and processes reflected RF signals to obtain weather radar base data. The RDA equipment is contained in a radar equipment shelter which is collocated with a generator shelter near the radar tower. The radar tower supports the RDA antenna, pedestal, and radome, which contains additional legacy and dual polarization RDA equipment. The radar equipment shelter may also contain a radar product generator processor/communications assembly (RPGPCA).

Base data is the unanalyzed basic measurement of:

- Reflectivity – The measurement of a target in intercepting and returning radio energy.
- Velocity – The component of motion toward or away from the radar.
- Spectrum width – A measurement of the standard deviations of the radial velocity spectrum within the observed volume.

The dual polarization base data consists of measurements of reflectivity, mean radial velocity, velocity spectrum width, differential reflectivity, differential phase, and correlation coefficients.

Base data is available in digital format for archiving and for transmission to the RPG group. The RDA is a self-contained unit designed for continuous, unattended operation. The RDA includes the radar transmitter, antenna/pedestal, radar receiver, and data processor cabinet. The data processor cabinet contains the associated hardware, firmware, and software required to perform the signal processing, ground clutter suppression, data extraction, pedestal control, status monitoring and fault detection, local control and display of performance data, and auto-calibration functions related to the radar operation. The antenna and its pedestal, along with the dual polarization antenna mounted electronics (AME) and RF pallet, is housed in the radome on top of the radar tower. The remainder of the RDA equipment (receiver, transmitter, and data processor cabinet) is housed in the RDA equipment shelter.

The AME assembly contains a power supply, AME processor, receiver module, built-in test equipment (BITE)/calibration module, and a solid-state cooler/heater. The RF pallet assembly contains receiver protection circuits, tuned and phase matched waveguide assembly, and transmit and receive limiters.

Wideband communications group

The WBC links the RDA with the RPG. The WBC uses a commercial T1, private T1 link (fiber optic or copper), or microwave line-of-sight (MLOS) communications depending upon whether the RDA and RPG are physically collocated, or in separate locations. If the RPG is located within 3,000 feet and a line can be physically located, a private T1 link is used. If the RPG is located a distance greater than 3,000 feet, data is transferred through a commercial T1, private T1, or MLOS equipment.

When MLOS is used, both ends of the respective link are housed in their own cabinet. At the RDA, the MLOS antenna is mounted on the radar tower or MLOS tower. At the RPG, the MLOS antenna is mounted on the facility roof, existing tower, or on a separate self-supporting tower.

Radar product generator group

The RPG uses weather algorithms to process the RDA base weather data into a variety of weather data products. The RPG is collocated with the RDA in Federal Aviation Administration (FAA) and DOD systems. In National Weather Service (NWS) systems, the RPG is located at the controlling associated user's site.

The RPG receives the base data from the RDA and processes it into base products (reflectivity, mean radial velocity, and velocity spectrum width). The RPG further processes this base data using stored algorithms to develop a set of derived meteorological products. The resulting product set, including the base products, is then made available for distribution over narrowband communications links to external users associated with the RPG. The RPG consists of a processor/communications assembly. The RPG processor/communications assembly (PCA) cabinet contains all the hardware and software required for real-time generation and storage of products for operational use. It also includes the hardware and software required for system remote control, status monitoring and error detection, product archiving, and hydro-meteorological data processing.

The RPGPCA cabinet contains the narrowband links used between the RPG and its users for product requests and distribution, and for inter-site product requests and distribution. The narrowband communication links are normal type circuits that require modems to modulate/demodulate serial binary data for transmission over voice grade analog links. The user to RPG links are either directly interconnected for intra-facility communications or leased dial-up commercial telephone lines for external data distribution. The hardware to ingest and distribute base data, to a maximum of four users, is provided.

Master system control function workstation

The MSCF workstation provides control for the operation and monitoring of the RPG and control of the adaptable parameters used with the RPG algorithms. Status and limited control of the RDA and wideband communications is available at the MSCF as well as status and control of the narrowband communication lines of the associated users, non-associated users, and other users. The MSCF workstation can be located distant or local with respect to the RPG. Operators and maintenance technicians use the MSCF to control the RPG and the radar. The MSCF terminal is also used for system testing, troubleshooting, and local product selection, generation, and distribution control. For FAA and DOD systems, a distant MSCF is used. NWS systems utilize a local MSCF.

Principal user systems

Principal users ingest radar products generated by the RPG. External principal user systems perform agency specific functions and are not considered a part of the WSR–88D baseline. Example systems include, but are not limited to, NWS Advanced Weather Interactive Processing System (AWIPS),

FAA Weather and Radar Processing (WARP), FAA Integrated Terminal Weather System (ITWS), FAA On-Site Display (OSD), and DOD Open Principal User Processor (OPUP).

The principal user systems rely on several different communications technologies and methods of access to interface the RPG. For a given WSR–88D RPG, each principal user is classified according to the type of communications interface and the association or product access permissions granted for the interface. Associated users have full time dedicated access to the RPG, and they have special access permission that allows them to request product generation/distribution. Non-associated users have on-demand access to the RPG, but they have permissions limited to request products that are regularly scheduled for generation and specifically designated for non-associated users.

The external principal users' systems ingest and display radar products from the RPG according to agency specific needs. For the NWS WSR–88D RPG, the associated principal user is typically a weather forecast office (WFO) AWIPS that is located in the same facility as the RPG. FAA and DOD may also have associated principal users connected to the NWS RPG. However, the user systems will be located at their respective agency's facilities. For the FAA WSR–88D, the OSD is typically the only associated user that is located within the RDA/RPG shelter. The remainder of associated users will be located at their respective agency's facilities. For the DOD WSR–88D, the associated principal users are all located at their respective agency's facilities. Some external users' systems have capability to support both associated and non-associated access.

414. AN/TMS–2 Portable Doppler Radar

The AN/TMS–2 model E700XD Portable Doppler Radar (PDR) is a ground based X-band radar system. It is compact, lightweight, and portable. These attributes allow the system to be easily installed providing precise weather radar data in areas critical for supporting Air Force and Joint Operations.

Since fielded in August of 2010, the PDR (fig. 2–3) has provided radar products worldwide in environments that previously had no Doppler weather radar capabilities available. Forward deployed weather personnel utilize these radar systems. Once configured and networked, the PDR also provides operational weather squadron (OWS) forecasters with critical data to enhance resource protection efforts. Products are made available to DOD users and Coalition forces across the globe. The PDR has directly contributed to the safety of air and ground operations while ensuring mission accomplishment in adverse weather conditions. Its capabilities enable protection efforts of DOD assets around the world.

Figure 2–3. AN/TMS–2.

Capabilities and limitations

The radar, by default, is set to operate at 9,345 MHz but can be tuned from 9,320 to 9,370 MHz in 100 kilohertz (kHz) steps. The transmitted waveform occupies 2 MHz of RF bandwidth due to the pulse compression coding used. This means the RF radiation is spread 1 MHz on either side of the transmit frequency. At 9,345 MHz, the radar actually sends energy out from 9,344 to 9,346 MHz. The radar should not operate within 10 MHz of another X-band Doppler radar—within 50 nautical miles (nm)—for optimal performance. The radar may potentially interfere with other sensors located in close frequency and physical proximity. Always check with the Installation Spectrum Manager and Installation Spectrum Plans before operating near critical RF systems. The AN/TMS–2 features include:

- 20+ meteorological products.
- User selected control by laptop computer running WeatherScout and Windows operating systems.
- A 1024 x 756 resolution color display of precipitation and status information.
- Map generation capability using onboard global positioning system (GPS) coordinates.
- User selected frequency control between 9,320 and 9,370 MHz in 100 kHz increments.
- Image storage and playback capability.
- Network capability.

The following table describes some of the most important operational specifications, capabilities, and limitations of the system. A complete listing is found in TO 31M1–2TMS2–1–WA–1, *Installation Guide and User Manual - Radar Cloud Detecting System - Portable Radar (PDR) - E700XD.*

AN/TMS–2 Specifications	
Input operating voltages	240 volts alternating current (VAC) 50 Hertz (Hz)/120 VAC 60 Hz auto switching
Operating frequency	X-Band, 9,320 to 9,370 MHz, user tunable in 100 kHz steps
Transmit power/RF power output	200 watts (nominal) peak power
Pulse repetition rates	500; 1,000; 2,000 pulses per second
Range	150 km (max theoretical limited by earth's curvature)
Doppler detection range	100 km
Clean air detection range	50 km at 70 µs
Antenna gain	35.2 dB
Azimuth scan rate	360° at 20° per second
Maximum temperature	140° F

General radar limitations

Several limitations affect the PDR system. The three most important are line of sight, attenuation, and anomalous propagation. The next paragraphs will explain each of these limitations.

Line of sight

The AN/TMS–2 transmitter is considered line of sight. Under normal conditions, radar signals are straight and will not bend. Under many conditions, the radar cannot see over the horizon. Therefore, the target cell must be showing above the horizon in order for the signals to reflect back to the antenna. Normally, the first part of a thunderstorm detected is the top. Typically, the top 30 percent of the cell has the least amount of moisture in it. As the cell moves closer to the radar, the lower part of the cell will be detected as it moves into view from over the horizon. Low-altitude weather may not be detected by the radar until it gets within 40 to 50 miles from the antenna since it is normally not high enough to show over the horizon.

Attenuation

Attenuation is the weakening of the force, intensity, or quantity of a radar beam the further it moves away from the radar transmitter due to some of the energy being lost to scattering and absorption. The following two paragraphs describe two types of attenuation that affect weather radar.

Precipitation attenuation

Precipitation attenuation occurs any time the radar beam is scattered by small water droplets in the atmosphere. This causes the quantity of the beam to be diluted. Small water droplets will reflect the beam but not always back to the receive antenna. When this occurs, the total amount of signal that reaches the main target is less. When the reflected signal returns to the antenna, there is a percent of the transmitted signal to process, but a smaller amount because less signal arrived at the target. In this case, the amount and level shown on the video display may be less than what is actually in the atmosphere. However, we can rely on the radar to give us a clear definition of the leading edge of a storm cell.

Range attenuation

Range attenuation is due to the radar beam spreading as it gets farther from the antenna. The beam is similar to a spotlight beam. The further from the reflector a beam of light gets the less its intensity is on an object. The larger the area covered by the beam the smaller the concentration of the beam on the cloud formation and the less reflectivity. The same amount of power is spread over a larger area reducing the amount of beam available to reflect back to the radar receiver. Within the design of the radar, engineers have accounted for the loss of this signal by having range normalization circuits called sensitivity time control.

Anomalous propagation

Extraordinary display of ground targets located at a distance from the radar site is termed anomalous propagation (AP), sometimes called ducting. These occur when the atmosphere has a temperature inversion combined with an abnormal decrease in moisture content. The standard atmosphere has a 2° C per thousand feet lapse rate. This means for each thousand feet increase in altitude, the temperature will decrease 2° C. If the temperature increases and there is warmer air over colder air, this is an inversion. The combination of the inversion and the decrease in moisture content will cause the radar beam to reflect off this layer and curve back to the earth's surface. This reflection of the beam is called super refraction and causes unusual ground targets to be processed by the radar.

The result of AP is that the operator may think a large thunderstorm is in progress when in reality the target displayed is a city some miles away. Some common things have been observed to be good signatures of AP.

AP only occurs in a stable atmosphere where the temperature inversion and moisture decrease are present. If the conditions are not the type to have a large severe thunderstorm, be cautious about the display of a cell with high levels of precipitation.

Watch the display for a minimum of 30 to 45 minutes and note any changes or movement. A real cell of this type will have a change in position and size in this period of time. The reports of this type of display indicate they occur early in the morning and will remain in the same location until after the sun has been up for 3 or 4 hours and then disappear.

The operator may attempt using a higher tilt angle to verify precipitation. A strong precipitation cell located near the radar will have enough vertical extent to reflect at a higher tilt. Raising the antenna tilt angle usually causes the transmitted energy to strike the inversion at an angle that eliminates ducting.

AP will not cause problems if the operator can recognize the weather depiction to be abnormal for the current conditions.

Unit description

This section describes the various units that make up the PDR. Afterwards, the system operation is explained.

Power conditioning unit

The power conditioning unit acts as a voltage regulator, line conditioner, and uninterruptable power supply (UPS) for the AN/TMS–2. The input of either 240 VAC 50 Hz or 120 VAC 60 Hz power is filtered and converted to provide stable 120 VAC 60 Hz source power for the system. This power is routed to the radar processor and its power control unit. Additionally, the power conditioning unit houses a replaceable internal battery pack that provides up to 20 minutes of backup power. The backup capability provides enough power to complete an orderly and safe shutdown of the AN/TMS–2 in the event of an input power loss.

Processor power control unit

The power control unit uses auto switching power supplies; however, the system should only use power supplied and filtered through the power conditioner unit to prevent voltage spikes and system damage and/or service interruption. The AN/TMS–2 series uses a rack-mounted power control unit. This unit:

- Converts 120 VAC 60 Hz input power into 48 VDC and supplies it to the amplifier and receiver/transmitter (R/T) assembly.
- Provides switches for turning on/off main power to the R/T assembly, radar transmit power and the radome assembly lights.
- Provides physical data link between the R/T and the AN/TMS–2 radar processor through a serial cable.

Radar processor

The AN/TMS–2 radar processor is a headless rack-mounted computer running the Linux operating system. The radar processor is connected to the power control unit through a serial cable and the laptop computer by Ethernet cable.

Processor drives

The AN/TMS–2 radar processor uses state of the art solid-state drives. The processor has two drive bays and four drive slots located in the front of the unit. The top slot includes the system/boot drive. This drive contains the Linux operating system, Iris radar processing software, radar control processing software, and all calibration and configuration files. The lower two drives store the actual data collected when the radar performs a scan.

Included with the radar system is a system restore drive containing a complete backup of the system. This drive is included in the event the first system drive fails. Keep the system restore drive in a secure location out of the elements.

Radome assembly

The R/T components and the antenna are installed inside the radome assembly for protection from the elements. The radome shell top and base are made of plastic lined with fiberglass for added strength. The radome shell is secured to the base by four stainless steel latches, making it easy to remove. The radome assembly is secured to the aluminum base plate with eight screws.

Laptop control computer

The laptop (or optional desktop) computer serves as the radar interface and control computer. It operates on Windows and includes WeatherScout control software. The control computer is connected to the Radar Processor through an Ethernet cable (included).

Cables

The AN/TMS–2 radome is connected to the back panel of the radar processor environmental enclosure with one main power cable and a CAT5e (or equivalent) communications cable. Both cables include quick disconnect weatherproof connectors.

Mast system

The AN/TMS–2 mast system includes a 30-foot pneumatic mast, hand pump, guy lines, and stakes. The mast system allows the PDR to be taken into the field and raised to a height of 30 feet by a 3-person crew.

Ruggedized tripod system

The AN/TMS–2 ruggedized tripod system includes a tripod, tripod center post, tripod feet with hardware, and a tripod tool kit. The ruggedized tripod system allows the PDR to be placed on the roof of a building by a 3-person crew.

Environmental enclosures

The environmental enclosures are rugged waterproof cases that are cooled by thermoelectric air conditioner units. The enclosures are designed to transport and house the power control unit, radar processor components, and the power conditioner unit. These enclosures can be placed at the base of the mast (or within 90 feet of the radome) allowing the radar to be controlled from a distance.

System operation

Now that you know the different pieces that make up the system, you need to know how it all works together. The concept of operation is explained down to the transmission and reception of a single energy pulse.

Concept of operation

The PDR detects precipitation or objects (targets) and their motion through the transmission and reception of electromagnetic signals. Energy is transmitted by the R/T through the antenna and reflected back by targets (object, or in this case, precipitation) and received back again by the R/T through the antenna. The R/T then computes the distance and density of the targets and sends the target information to the indicator (in this case, a laptop computer) which displays the targets on its liquid crystal display (LCD).

When the transmitter generates a pulse of energy, the receiver automatically locks to the frequency of the transmitter. The pulse is transmitted for a specific time at a constant power output. The receiver looks for a signal on this frequency, processes the signal based on the specific time, and measures the returned signal based on a percentage of the power output. The receiver circuitry must process the returned signal before another pulse can be transmitted.

The antenna is used to transmit and receive the signals. It can only do one at a time, and thus must switch back and forth between the two tasks. The antenna appears to be constantly moving, but a stepper motor is actually driving it in time with the transmitter.

Receiving and transmitting a single pulse of energy

The steps involved in transmitting and receiving a single pulse of energy are as follows:

- The transmitter turns on and stays on for a specified time (the pulse width).
- When the signal was transmitted, the receiving circuitry initiated a timing sequence.
- When a signal is received, the radar first checks the time lapse since the signal was transmitted. Since the signals travel at a constant speed (the speed of light), this time lapse is converted by the radar to indicate range. The signal is processed and the percent of transmitted signal is calculated and converted into levels of reflectivity. Reflectivity is the

intensity of perceptible water in the atmosphere, thus, the more water, the more reflected signal.

- The range and intensity has been determined at this point. The computer now uses this information to plot the position of targets on the screen to show their intensity by using color.
- The picture seen on the screen shows the precipitation at the correct location and in the intensity detected. Graphics or background maps are added to aid in identifying the weather relative to known landmarks.

415. AN/FMQ–19 Automated Meteorological Station

The AN/FMQ–19 Automated Meteorological Station is a packaged system of sensor clusters and controls designed to provide all required weather data in support of air operations. The AN/FMQ–19 accurately samples, measures, and reports temperature, precipitation identification, wind speed and direction, visibility and ambient light, cloud base height and amount of coverage, pressure, lightning detection, liquid equivalent precipitation accumulation, and ice accretion during freezing precipitation. These measurements are processed to create properly formatted, fully automated observations that comply with various reporting standards and protocols defined in the Federal Meteorological Handbook (FMH)-1, the World Meteorological Organization (WMO), the FAA, NWS, and military reporting standards.

Capabilities and limitations

The following table describes the sensor specifications and characteristics. More information can be found in the applicable TOs in the Enhanced Technical Information Management System (ETIMS).

FMQ–19 Capabilities and Limitations	
Air temperature and relative humidity (AT/RH) Sensor Specifications	
Humidity Sensor Operating Range	–40º C to +60º C 0 to 100% relative humidity
Humidity Sensor Accuracy	±1 %
Temperature Sensor Operating Range	–80º C to +75º C (–112º F to +167º F)
Temperature Sensor Accuracy	±0.2º C over full range
Precipitation Identification (ID) Sensor Details	
Operating Temperature Range	–40º C to +50º C
Present Weather Identification	Rain, Snow, Drizzle, Mixed
Output Data Type	Present weather codes, precipitation rate, and accumulation
Rain Accuracy	±10% accumulation
Snow Accuracy	±10% accumulation (depending on snow density)
Wind Monitor Technical Characteristics	
Operating Temperature Range	–70º C to +55º C
Wind Speed Range	0 to 130 mph
Lowest Measured Wind Threshold	2.2 mph
Accuracy	±0.67 mph
Wind Direction Range	360°
Wind Direction Accuracy	±2°
Freezing Rain Sensor Capabilities	
Operating Temperature Range	–30º C to +60º C

FMQ–19 Capabilities and Limitations	
Minimum Detected Freezing Rain	0.005 inches
Output Data	“Ice/No Ice” frequency from probe tip
Barometer Features	
Operating Temperature Range	140º C to +65º C
Operating Pressure Range	17.5 to 32.5 inches Mercury (Hg)
Frequency Output	600 to 1100 Hz square wave
Lightning Detector Capabilities	
Operating Temperature Range	–50º C to +55º C
Detection Range	30 nm radius
Thunderstorm Detection Efficiency	100% within 10 miles, with three discharges
Range Resolution	0 to 5 miles, 5 to 10 miles, 10 to 30 miles
Bearing Resolution	0 to 360° (reported by octant)
Precipitation Gauge Accuracy	
Operating Temperature Range	–50º C to +50º C
Accuracy	±0.5% at 0.5 inches an hour (in/hr), ±1% at 1 – 3 in/hr
Ceilometer Technical Characteristics	
Cloud Height Measurement Range	30 to 25,000 feet
Accuracy	±20 feet or 1% (whichever is greater)
Operating Temperature	–40º C to +50º C
Laser Type	Gallium arsenide; Class 1
Options	Blower to remove snow from lenses/solar shutter for use in tropical zones
Visibility and Ambient Light Sensor Specifications	
Visibility Sensor Temperature Range	–55º C to +55º C
Visibility Sensor Operating Range	20 feet to 10 miles
Visibility Sensor Accuracy	±10% or 10 feet (whichever is greater)
Visibility Sensor Light Source	Infrared light-emitting diode (LED)
Ambient Light Sensor Temperature Range	–55º C to +60º C
Ambient Light Sensor Field of View	6°

Theory of operation

The AN/FMQ–19 grew out of the need to streamline tasks performed by weather station personnel, and by the opportunity to make use of state-of-the-art technology that is readily available in commercial off-the-shelf weather gear. The AN/FMQ–19 consists of three major parts: various sensors, a field data collection unit (FDCU), and a Joint Environment Toolkit (JET) sensor collection appliance (SCA). Data is transferred from the sensors to the FDCU by copper wire, leased line, or fiber optic cables. Data is formatted and transferred to a patch panel/modem and then sent to a serial to Internet protocol (IP) converter. Finally, the signal is sent to the JET SCA, which uses a web-based program that allows technicians access to the FDCU data. The system can be viewed, disabled, and maintained through the website.

Let’s begin with a discussion of the sensor technical characteristics and operations. Since this discussion is not all-inclusive, refer to the AN/FMQ–19 TO for a complete list of system specifications.

Sensors

Typically, weather-sensing gear is comprised of individual sensors installed around an airfield. In the AN/FMQ–19, the sensors are located as a cluster at one, two, or three locations near the runway. Figure 2–4 shows the layout of a complete AN/FMQ–19 sensor cluster.

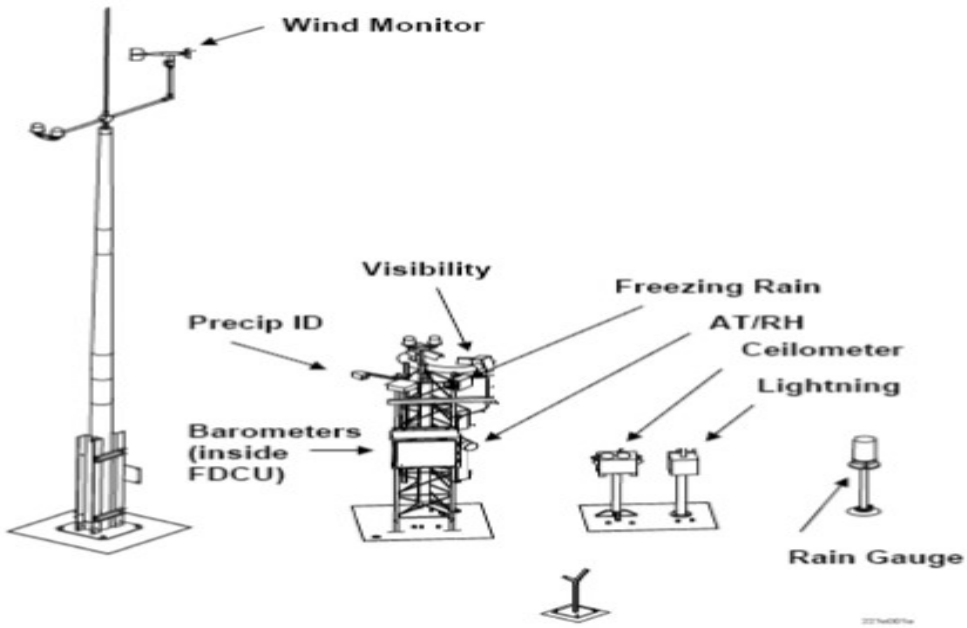

Figure 2–4. AN/FMQ–19 sensor site.

As you can see, the set of sensors provides all the information needed in order to safely depart and land aircraft sorties. Now let us take a closer look at what each of the sensors can do.

Air temperature/relative humidity sensor

Humidity and temperature are measured using an AT/RH sensor probe that is located inside of a radiation shield (fig. 2–5). The device mounts on a 3-meter tall tower that shares other sensor components. A capacitive probe receiving fresh ambient air through a blower located within the enclosure provides relative humidity data. The humidity sensor energizes for 0.25 seconds when making measurements, and outputs a linear analog signal between 0 and 1 volt. This signal directly corresponds to humidity levels between 0 and 100 percent. A separate precision resistance temperature detector (RTD) is also in the radiation enclosure. It uses a precision thermistor that changes its resistance as the temperature of the incoming air changes. A voltage derived from that resistance corresponds to ambient air temperature.

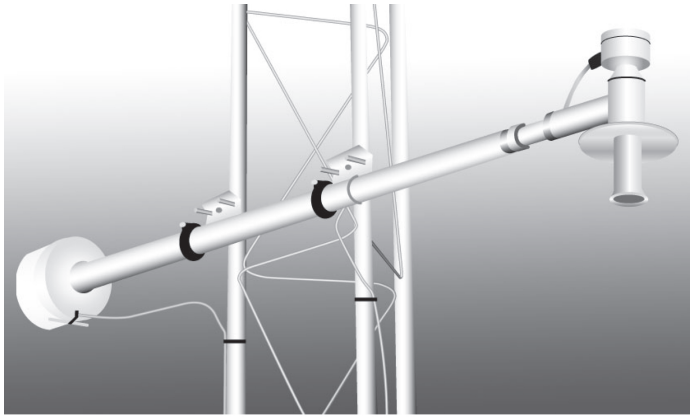

CDC3D156003-0908-004

Figure 2–5. AN/FMQ–19 AT/RH sensor.

Precipitation identification sensor

Figure 2–6 shows the precipitation identification sensor. It mounts on the top of the 3-meter tower. The precipitation identification sensor detects the presence and type of precipitation in the atmosphere. It uses an infrared LED as a light source; two photo-detectors detect and analyze the amount of scintillation produced as snow or rain falls through the beam. In addition, the analysis of the scintillation determines the occurrence, type, and intensity of the precipitation.

CDC3D156003-0908-010

Figure 2–6. AN/FMQ–19 precipitation identification sensor.

Wind monitor

The wind monitor mounts on top of a tower that is 10 meters in height (fig. 2–7). The wind speed information derives from an AC signal generated by the wind rotating the propeller. The frequency of the AC signal is directly proportional to the rotation of the propeller, thus it is directly proportional to wind speed. The provided wind direction information is by a precision potentiometer located beneath the wind speed transducer, which has its wiper arm connected to the body of the wind monitor, which rotates into the wind. An applied regulated voltage across the potentiometer, and the voltage felt at the wiper arm corresponds to the position of the wind monitor through 360° of direction. The output voltage felt from the wiper arm is directly proportional to wind direction.

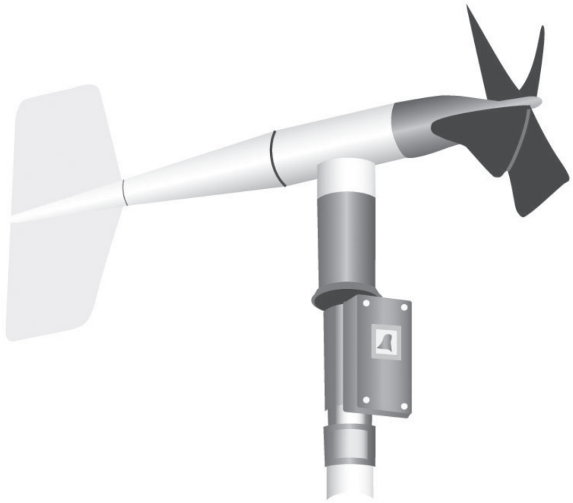

CDC3D156003-0908-002

Figure 2–7. AN/FMQ–19 wind monitor.

There is also an extreme weather version of the wind monitor. This unit uses a heated anemometer cup to keep ice from inhibiting its rotation and can sense wind speeds up to 200 miles per hour.

Freezing rain sensor

The freezing rain sensor consists of an enclosure, probe, and fiber optics module (fig. 2–8). The sensor mounts on the 3-meter tower with other sensors. The freezing rain sensor detects the presence of freezing rain as it accumulates on an aluminum alloy probe. The probe normally vibrates at 40,000 Hz; as ice, frost, or wet snow accumulates on it, its frequency decreases. It analyzes the decrease in frequency to determine the presence of freezing rain. To prevent accumulations of ice from causing frequency degradations in frequency and impaired measurement, the probe is heated and cooled and returns to its base frequency. The sensor does *not* measure the rate of accumulation of freezing rain, only its presence.

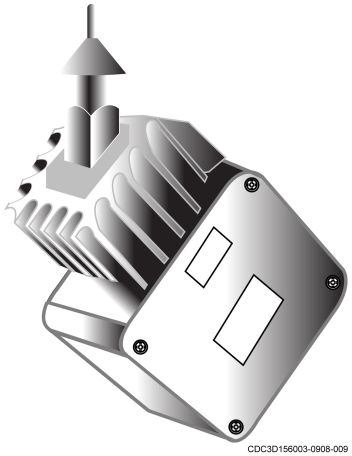

Figure 2–8. AN/FMQ–19 freezing rain sensor.

Barometer

The barometer measures station pressure. The FDCU houses three barometers on the 3-meter tall tower with the majority of the other sensors. Figure 2–9 illustrates a single barometer.

Figure 2–9. AN/FMQ–19 barometer.

The barometer uses a silicon transducer that outputs a frequency signal that is directly proportional to the station pressure felt by the transducer. The three barometers measure barometric pressure simultaneously, and the system averages their outputs. It then issues an average value to determine and indicate station pressure. The system disregards the barometers output if one barometer output differs from the others by a small amount.

Lightning detector

Lightning detection is accomplished using a lightning detector, which is mounted on a concrete slab next to the ceilometer (fig. 2–10). It detects cloud-to-cloud and cloud-to-ground lightning discharges. The lightning detector is a single-point system that detects optical, electrical, and magnetic pulses to determine the occurrence of lightning as well as differentiating between cloud-to-cloud and cloud-to-ground lightning. The antenna assembly contains two magnetic antennas set at right angles to each other, an omnidirectional electric field antenna, and an optical sensor. The sensor detects the individual discharges that make up a flash of lightning. The individual discharges are counted to determine range, and are located by octal quadrant.

Figure 2–10. AN/FMQ–19 lightning detector.

Figure 2–11. AN/FMQ–19 precipitation gauge.

Figure 2–12. AN/FMQ–19 ceilometer.

Precipitation gauge

The precipitation gauge allows measurement of liquid precipitation—snow and rain (fig. 2–11). It mounts on its own concrete slab. The gauge collects precise amounts of liquid in a small bucket. Gravity tips the bucket when it fills. The tipping action activates a reed switch, which produces a momentary closure signal. The total number of switch closures indicates the total amount of precipitation. Thermostatically controlled heaters reduce snow falling into the bucket. Measuring of the liquid is the same way as rainwater.

Ceilometer

The ceilometer mounts on a concrete pad (fig. 2–12). The unit uses the light detection and ranging principle whereby laser pulses transmit upward at a one-kHz rate and pulses reflected from clouds overhead are recovered by an avalanche photo-diode. The time between transmission of the laser pulses and recovery of reflected backscatter is measured and digitized. The total time is directly proportional to cloud height. The ceilometer can detect and measure up to three separate cloud bases overhead, as well as the depth of the clouds. An on-board microprocessor controls the set's parameters and converts the backscatter into meaningful information. A heater and blower clear snow accumulation off the transmitter and receiver lenses in cold weather. In addition, an optional solar shutter may be installed for ceilometer sites near the equator. To prevent damage to the receiver diode the shutter automatically shuts and covers the ceilometer lenses if it detects solar radiation from a near-vertical direction.

Visibility sensor and ambient light sensor

Two sensors, the visibility sensor (fig. 2–13), and the ambient light sensor (fig. 2–14) provide runway visibility. Both sensors are co-located on the 3-meter tall tower with other sensing equipment. The visibility sensor contains an infrared LED, which projects light into an enclosed area. Light that strikes a receiver mounted at an angle of 34° in relation to the LED is measured; this measurement combines with the output from the ambient light sensor as an overall runway visibility measurement.

Figure 2–13. AN/FMQ–19 visibility sensor.

Figure 2–14. AN/FMQ–19 ambient light sensor.

Configurations

Most sensors are mounted on a three-meter tower. The wind monitor is the only sensor mounted on the 10-meter tower. Three sensors mount on their own pedestals—precipitation gauge, ceilometer, and lightning detector.

Sensor Groups

Sensors are installed in sensor groups. Each base will have between one and three sensor groups, depending on runway length, terrain, and mission needs.

The primary sensor group typically consists of sensors placed on a concrete slab or pad, and a group of sensors affixed to a 10-meter tower and a 3-meter tower. The 10-meter tower supports the wind monitor, a lightning-protection rod, and obstruction lights. The 10-meter tower is located approximately 10 feet from the 3-meter tower. The 3-meter tower supports the FDCU, visibility sensor, precipitation identification sensor, freezing rain sensor, AT/RH sensors, and obstruction lights. The ceilometer, lightning sensor, and rain gauge are mounted on a separate stand atop concrete pads or a concrete slab. Additionally, the primary sensor group will have the three barometers located within the FDCU.

A secondary sensor group also consists of the 10-meter tower and the 3-meter tower, but has fewer sensors. The 10-meter tower has the wind monitor and the 3-meter tower has an FDCU but no barometers. A ceilometer sits on its own slab of concrete. Additional sensors, typically the visibility sensor, can be included or removed to meet the needs of the specific installation as determined by the AN/FMQ–19 site survey team.

The midfield sensor group is for category (CAT) II airfields or runways are over 8,000 feet. This sensor group has a 3-meter tower with a visibility sensor and an FDCU without barometers. On occasion, a wind monitor is added and is placed atop a 10-meter tower along with a ceilometer on its own slab of concrete. Additional sensors can be included or removed to meet the needs of the specific installation as determined by the AN/FMQ–19 site survey team.

Perle device

The Perle device performs the function of receiving data through RS–232 communications lines from the FDCUs and runway heading and light intensity monitors (RHLIM). It converts the information from serial to IP. This conversion allows the Perle device to send the data to the JET SCA. This device, along with the fiber optic line driver and UPS, are mounted in the cabinet assembly rack. The rack is approximately 42 inches high and 19 inches wide. The rack has its own dedicated power supply that allows communication with the FDCU and RHLIM.

Joint Environment Toolkit server

Access to the OWS JET Portal is controlled by certificates and by assigned user roles. In order to access OWS JET Portal functionality, you need a certificate (a common access card or a valid software certificate). You also need a user account, which you can request from the OWS JET Portal by accessing it as a guest. Once access has been granted, maintainers are able to view the readings produced from the sensors.

Field data collection unit direct connect communication architecture

The FMQ–19 FDCUs can send data directly to the SCA over the base network with a serial-to-IP converter. The SCA performs the calculations previously performed by the FMQ–19 server. Because this configuration bypasses the legacy FMQ–19 server and sends data directly to the SCA, it is referred to as the "FMQ–19 direct connect" configuration. For purposes of simplicity and to avoid confusion, the OWS JET Portal and the SCA webpages refer to this configuration as the "FDCU" configuration. Figure 2–15 shows the FDCU architecture and data flow.

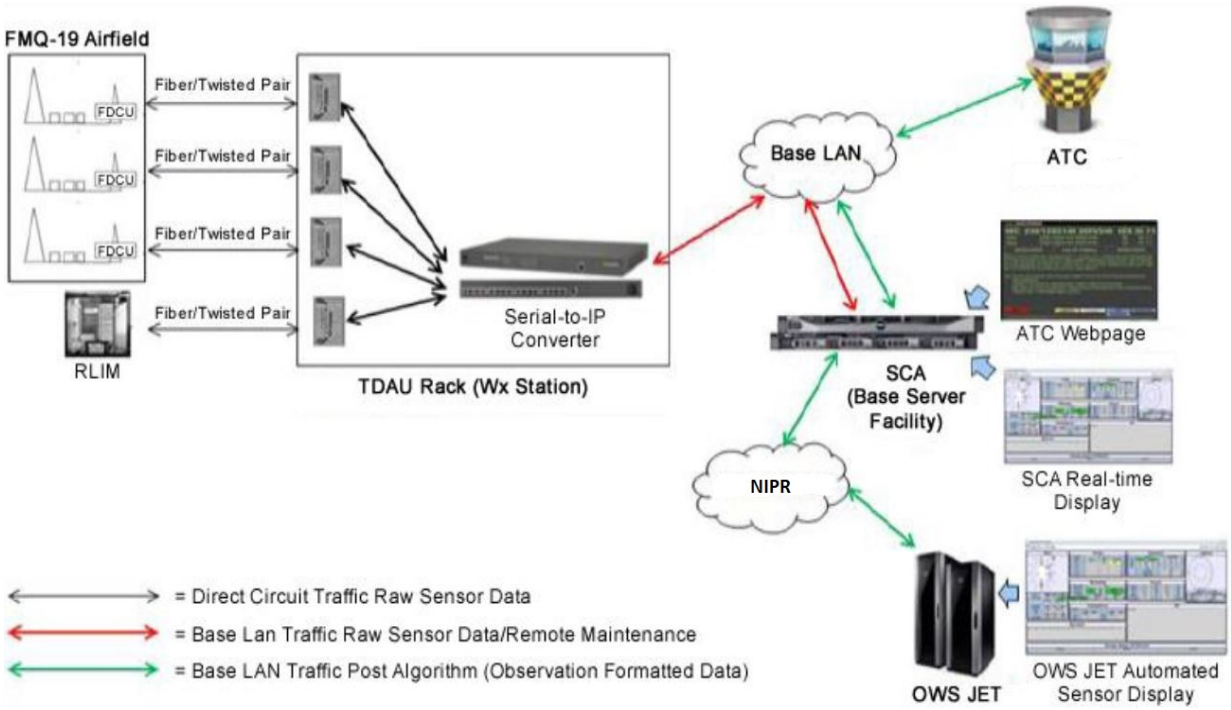

Figure 2–15. FMQ–19 FDCU architecture and data flow.

416. AN/FMQ–22 Automated Meteorological Station

The AN/FMQ–22 is an integrated system of weather sensors that measure, collect, and disseminate meteorological data to help meteorologists, pilots, and flight dispatchers prepare and monitor weather forecasts, plan flight routes, and provide real-time atmospheric information at missile alert facilities and helicopter pads. The system provides high performance in a very compact package, integrated

upon one pole mast and a separate rain gauge structure. This section covers the system capabilities and limitations, and a brief theory of operation.

Capabilities and limitations

The AN/FMQ–22 (fig. 2–16) consists of 7 different sensors that measure wind speed and direction, rain accumulation, lightning occurrence/location/frequency, cloud height and coverage, temperature and humidity, atmospheric pressure, precipitation type and intensity, freezing rain occurrence, ambient light, and horizontal surface visibility.

Figure 2–16. FMQ–22 Automated Meteorological System.

The following table shows the system technical data. More information can be found in TO 31M1–4–48–2–WA–1, *Maintenance and Troubleshooting Guide with Illustrated Parts Breakdown - Automatic Meteorological Station, ANFMQ-22.*

AN/FMQ–22 Technical Data	
Operating temperature	–40° to 122° F
Relative humidity	5 to 100%
Mast	Tiltable 30 foot pole mast, lowered and raised by removable winch system
Maximum wind speed	130 knots (with two sets of guy wires)
Power	US – 110 V/60 Hz Europe – 230V/50 Hz
Internal battery	12V/12 Amp hour (provides 4 hours of backup power)
Wireless communication	Voice radio
Landline communication	RS–232, RS–485 bus, fixed line modem

Theory of operation

The FMQ–22 essentially operates the same as the FMQ–19, but it has a few small differences. The FMQ–22 has less sensors and is contained almost entirely (except for a rain gauge) on one mast. All sensors are directly connected to a data collection platform (DCP) enclosure through the unit's connector panel, which is similar to a FDCU. Data then disseminates to a JET SCA where it is processed into a usable format for the OWS server.

Sensor data

Sensor data for the FMQ–22 is essentially the same as the FMQ–19. While the sensors may look a bit different, they still produce the same weather-related readings. Individual sensor information can be found in TO 31M1–4–48–2–WA–1.

System data

Inside of the DCP, the sensor data is sent to a data logger that saves the system's data. There are different types of data the system uses; raw data, stored data, data logs, and graph displays. These are explained in the table below:

Data Type	Explanation
Raw data	This is a collection of the current day's most recent 200 lines of data received from a sensor. Viewing this data is useful in troubleshooting and determining if data is being received. **NOTE:** The raw data display must be manually refreshed to display the most current data.
Stored data	This data is a list of currently stored info such as runway information, descriptions, abbreviations, time stored, and data values.
Data log	Displays the entire current day's raw data log (not just the last 200 entries).
Graph displays	Graphs allow the display of sensor data in a graphical format from current to up to 48 hours in the past, depending on the configuration. The graph display period is set up in the general configuration window.

Accessing the data

You can access the system locally or remotely. Maintenance and troubleshooting usually require locally connecting a maintenance laptop to the DCP port COM0 (fig. 2–17) with a serial cable. The local info can be accessed using either the Active Optical Systems (AOS) software or a terminal connection to the command line interface of the DCP. Tera Term is the provided terminal emulator used for this action. You cannot connect to the DCP using Tera Term and AOS at the same time. To connect to the DCP using AOS, you must use the laptop port labeled "Port 1." To connect to the DCP using Tera Term, you must use the laptop port labeled "Port 2."

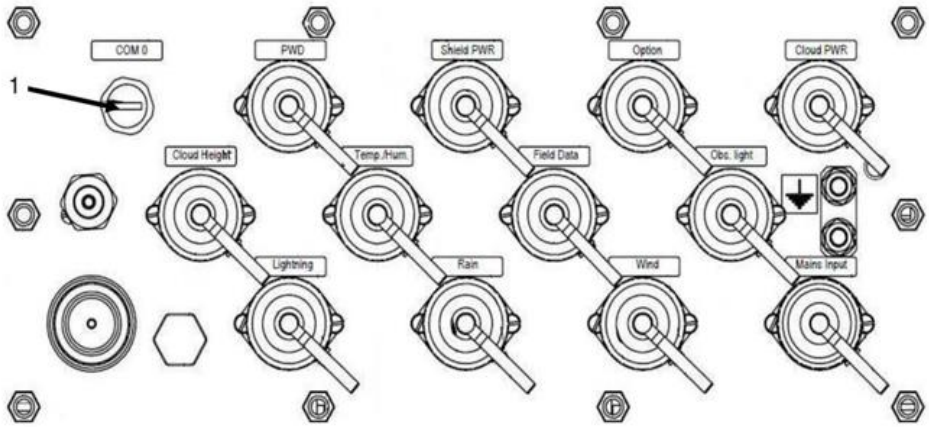

1 COM 0 Port

Figure 2–17. DCP enclosure connector panel.

Recent upgrades to the system have eliminated the AOS laptop as a sensor data processor to accommodate connection to the JET SCA. A serial-to-IP device replaces the laptop from the normal system architecture. This allows for the AOS laptop to be used solely as the maintenance laptop for local connection.

Refer to figure 2–18 as we describe the system architecture. Raw sensor data is transmitted to the data converter where it is converted from a serial to IP format, but still contains raw sensor data. This data is then sent over the local network to the JET SCA where it is processed. From there it flows similar to the direct connect architecture described in the FMQ–19 section. The processed sensor data is sent over the non-classified Internet protocol router (NIPR) network to the JET OWS server where it formats the data. It is then ready for distribution and can be accessed online.

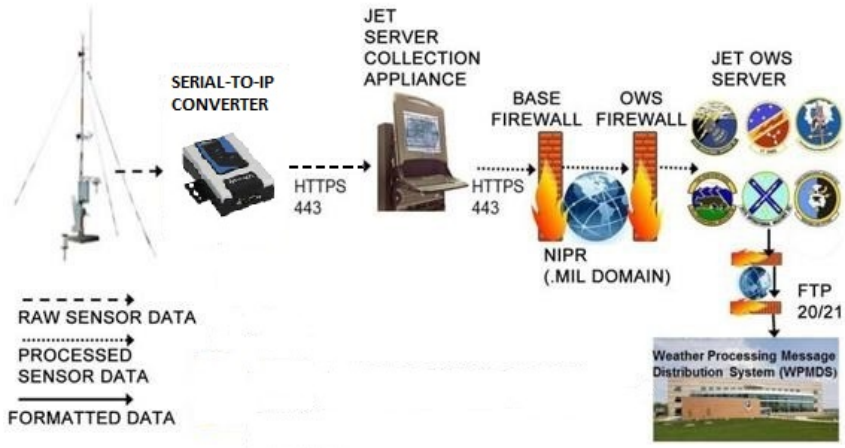

Figure 2–18. FMQ–22 system architecture.

417. AN/FMQ–23 Automated Meteorological Station

The AN/FMQ–23 is a complete system of outdoor and indoor equipment for measuring weather-related conditions to support flight operations and safety. Outdoor equipment includes sensor groups, towers and support structures, DCP, communication equipment, and uninterruptible AC power. Indoor equipment includes the central processing station (CPS) and the Airport Weather Advisor (AWA) software. This section describes capabilities and limitations, and provides a system overview of the FMQ–23.

Capabilities and limitations

The following table shows the system technical data. More information can be found in TO 31M1–2FMQ23–1–WA–1, *Operations and Maintenance Instructions with Illustrated Parts Breakdown – Automatic Meteorological Station, ANFMQ23.*

FMQ–23 Capabilities and Limitations	
Wind Speed and Direction	
Wind Speed Range	0 to 136 knots (150 MPH)
Wind Speed Accuracy	±0.58 knot or ±1%, whichever is higher
Wind Speed Resolution	1 knot
Wind Direction Accuracy	±3° at 6 knots
Temperature and Relative Humidity	
Temperature Measurement Range	–75° C to +70° C (–103° F to +158° F)
Temperature Accuracy	±0.2° C from –50° C to +70° C (–58° F to +158°)
Relative Humidity Range	0–100%

FMQ–23 Capabilities and Limitations	
Altimeter/Barometer	
Range	600 to 1100 hectopascals (hPa)
Accuracy	±0.364 hPa
Precipitation Accumulation	
Precipitation Accumulation Capacity	0 to 10 inches/hour
Precipitation Accumulation Accuracy	± 0.02 inch or 5% of the hourly total (whichever is greater)
Precipitation ID/Visibility/Ambient Light	
Measured Precipitation Types	Rain, snow, fog, mist, haze, freezing fog, freezing rain, thunderstorms, ice pellets, hail, blowing snow, freezing drizzle, squalls, and showers
Rainfall Rate Range	.004 to 118 inches
Snowfall Rate Range	.0004 to 12 inches
Visibility Measurement Range	0 to 10 SM
Visibility Measurement Accuracy	±10%
Ambient Light Measurement Range	0 to 9,990 candelas per square meter (cd/m^2)
Ambient Light Measurement Accuracy	10%
Hail and Ice Pellet Sensor	
Hail and Ice Pellet Detection Accuracy	90%
Cloud Height	
Range	0 to 40,000 feet
Accuracy	±30 feet
Minimum Detectable Cloud Thickness	50 feet
Lightning Sensor	
Lightning Detection Types	Cloud-to-cloud, cloud-to-air, and cloud-to-ground strikes
Detection Distance Range	0 to 200 nm
Accuracy	Within 3 nm in the 0 - 10 nm range (≥90% detection rate) Within 6 nm in the 10 - 30 nm range (≥80% detection rate)
Ice Accretion Sensor	
Range	.02 to .10 inches
Resolution	.004 inches

Theory of operation

Again, this system operates much in the same way as an FMQ–19. The complete and installed FMQ–23 consists of a primary sensor group, optional secondary sensor groups, and a CPS running the AWA software. The airfield stations measure meteorological parameters and send the data to the central computer for reporting a wide range of weather information.

Each airfield station has one or more meteorological sensors with their data outputs connected to the DCP. The DCP checks the quality of the sensor data before forwarding them to the CPS for processing. Redundant communication links (wired and/or fiber optic media) connect the airfield stations to the central computer.

In addition to the standard airfield stations, the FMQ–23 includes a RHLIM, which is typically installed in the runway lighting vault. The RHLIM monitors both runway light intensity (used in RVR calculations) and active heading, which automatically determine from which virtual station meteorological reports are generated.

Backup batteries support the sensor groups and RHLIM to keep them operating for at least 35 minutes in the event of a power failure.

Weather sensors

The AN/FMQ–23 includes 8 different types of weather sensors, two types of data automation equipment, power regulation and distribution units. A 10-foot tower contains the precipitation ID/visibility/ambient light sensor, ice accretion sensor, hail and ice pellet sensor, obstruction lights, and the present weather power supply. The 30-foot tower is an epoxy powder-coated aluminum structure with a 7-band FAA compliant color pattern. Individual pedestals include the lightning sensor, rain accumulation gauge, ceilometer, and AC distribution and communications. This tower holds the wind sensor and dual obstruction lights, as well as the wind sensor power supply. The tower is mounted on a hinged base that is fastened to prevent unintentional tilting. A removable worm gear winch provides resistance in both directions to safely tilt and raise the lightweight tower for equipment service. The lowered tower rests on a removable cradle. A cross arm installed at the top of the 30-foot tower provides an installation point for the obstruction lights at one end and the wind sensor at the other end.

Outdoor sensor grouping

Sensors of the AN/FMQ–23 are deployed as either the primary, discontinuity (secondary), or midfield configurations. The primary configuration usually has all sensors installed. Both discontinuity and midfield configurations usually only have a DCP, wind direction/speed sensor, and a precipitation ID/visibility/ambient light sensor installed. Configuration determination is similar to the AN/FMQ–19 and depends if you have a CAT II airfield or a runway over 8,000 feet.

Indoor equipment

The FMQ–23 indoor equipment consists of four main components: the CPS server, CPS communication equipment rack, RHLIM, and the AWA. The RHLIM is considered indoor equipment since it is typically located in the runway lighting vault.

Central processing station server

The CPS server is a Dell PowerEdge server (or equivalent) in a rack-mounted configuration, equipped with hot-swap disk drives and redundant power supplies. The system includes the Windows 2008 R2 (or later) operating system secured to Information Assurance standards. The server is supplied with a monitor, mouse, and smartcard keyboard for use as a local AWA and maintenance console.

Central processing station communication equipment rack

The CPS communication equipment rack houses the CPS server, media transceivers, redundant Ethernet switches, and the uninterruptible power supply. It also serves to consolidate the network cabling neatly in one place.

Airport Weather Advisor

AWA is an aviation meteorological observing and reporting software that provides air traffic controllers and airport meteorologists with accurate and current real-time weather information for all runways at their airport.

AWA has two forms of the display/workstation clients: the web-based graphical user interface (GUI) and the classic Windows GUI. Despite their different formats, these GUIs have similar features and functions. The web application runs in any common web browser over the LAN and offers remote access. It allows the user to view airfield weather data, reports, archived records, and maintenance information remotely over a secure connection. The Windows GUI runs only on the CPS console.

AWA also disseminates data to the USAF Global Information Grid (GIG). The CPS hosts a secure web server that external systems on the GIG, such as JET, can poll for data. AWA takes all processed sensor data and puts it into a database on the server. The SCA will connect to the CPS to “grab” the

data from the database file to get the required sensor information. After the SCA has the information, the data will travel the same way, with similar connections, as previously described in the FMQ–19 and FMQ–22 sections.

Runway heading and light intensity monitor

The RHLIM detects the active runway heading and the light intensity levels of airport runway lamps (fig. 2–19). It is a primary component in the RVR system. The unit sends data directly to the CPS for use in the RVR calculations. AWA creates meteorological reports on specific sensor groups using active heading data.

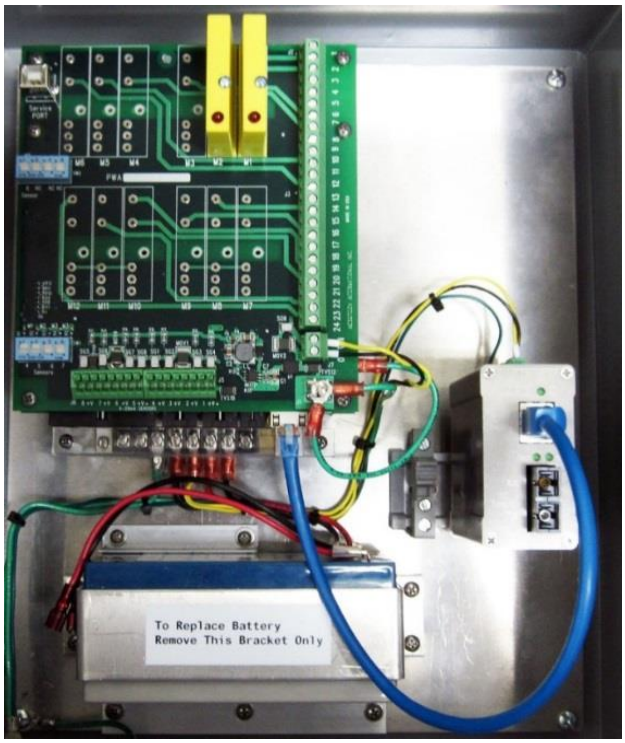

Figure 2–19. RHLIM.

The RHLIM monitors runway lighting and headings using either current or voltage sensing transducers. The voltage sensing transducers connect to airfield lighting control signals, while the current transducers clamp around the conductors that deliver power to the runway lights. The typical RHLIM configuration monitors runway edge and center lights for RVR calculations and Precision Approach Path Indicator (PAPI) lights for active heading status.

Self-Test Questions

After you complete these questions, you may check your answers at the end of the unit.

413. WSR–88D Next Generation Radar

1. Name two advantages of a high-powered weather radar such as the NEXRAD.

2. What is the frequency range of the WSR–88D radar?

3. Name the five equipment groups the basic form of the WSR–88D is functionally subdivided into.

4. Explain what actions the RDA subsystem performs.

5. What kind of operation is the RDA designed for?

6. State the basic purpose of the WBC.

7. Match the WSR–88D equipment group in column B with the description in column A. Items in column B may be used more than once.

Column A

____ (1) Generates and radiates RF pulses.
____ (2) Has a PCA cabinet that contains all the hardware and software required for real-time generation and storage of products for operational use.
____ (3) Provides control for the operation and monitoring of the RPG and control of the adaptable parameters used with the RPG algorithms.
____ (4) Ingests radar products generated by the RPG Links the RDA with the RPG.
____ (5) Used for system test and troubleshooting and local product selection, generation, and distribution control.
____ (6) Uses weather algorithms to process the RDA base weather data into a variety of weather data products.
____ (7) Uses a commercial T1, private T1 link, or MLOS communications depending upon whether the RDA and RPG are physically collocated, or in separate locations.

Column B

a. RDA.
b. RPG.
c. WBC.
d. MSCF.
e. Principal user systems.

414. AN/TMS–2 Portable Doppler Radar

1. What is the operating frequency range for the AN/TMS–2?

2. What is the max Doppler detection range for the system?

3. Name three ground radar limitations that affect the AN/TMS–2.

4. Match the AN/TMS–2 unit in column B with the appropriate unit description in column A. Items in column B may be used once, more than once, or not at all.

Column A	*Column B*
____ (1) Headless rack-mounted computer running the Linux operating system.	a. Power conditioning unit.
____ (2) Acts as a line conditioner and UPS.	b. Radar processor.
____ (3) Serves as the radar interface and control.	c. Processor power control unit.
____ (4) Contains the Linux operating system, Iris radar processing software, radar control processing software, and all calibration and configuration files.	d. Processor drives.
____ (5) Stores the actual data collected when the radar performs a scan.	e. Laptop control computer.
____ (6) Protects the R/T and antenna from outside elements.	f. Radome.
____ (7) Provides switches for turning on/off main power to the R/T assembly, radar transmit power and the radome assembly lights.	

5. What happens to the target information after the R/T computes the distance and density of the targets?

415. AN/FMQ–19 Automated Meteorological Station

1. What is the operating range, in Fahrenheit, for the temperature sensor?

2. What is the detection range of the AN/FMQ–19 lightning detector?

3. What option can be used on the ceilometer to keep snow from blocking the sensor lenses?

4. What allows technicians access to FDCU data through a website?

5. How is relative humidity measured by the system?

6. Explain how the wind speed information is derived from the wind sensor.

7. What is the rate at which the freezing rain sensor vibrates when no freezing rain is present?

8. How many barometers are used in the AN/FMQ–19?

9. How is frozen precipitation melted in the precipitation gauge?

10. Explain how the ceilometer uses lasers to find cloud height.

11. What three factors determine what sensor grouping is required?

12. What equipment converts the serial FDCU data to IP so that it can be sent to the JET SCA?

416. AN/FMQ–22 Automated Meteorological Station

1. At what two unique locations does the AN/FMQ–22 provide weather information?

2. Describe the mast system for the AN/FMQ–22.

3. How long does the system's internal battery provide backup power?

4. Name four different types of data used by the system.

417. AN/FMQ–23 Automated Meteorological Station

1. What are the different types of precipitation that the AN/FMQ–23 can measure or sense?

2. What are the three types of lightning detection measured by the AN/FMQ–23?

3. What data does the RHLIM monitor and what does this information determine?

4. What device is used to lower and raise the 30-foot tower?

5. What four components make up the indoor equipment?

6. What reporting software provides air traffic controllers and airport meteorologists with accurate and current real-time weather information for all runways at their airport?

7. The RHLIM sends data directly to the CPS for use in what calculations?

Answers to Self-Test Questions

411

1. The measure of the average kinetic energy of the molecules in the air, measured in Celsius and Fahrenheit.
2. Existing fog and low clouds will likely dissipate because water vapor is evaporating into the warming air.
3. Strength and direction from which the wind is blowing.
4. Measure of the opacity of the atmosphere and is a measure of the distance at which an object or light can be clearly discerned.
5. (1) Station pressure; (2) Altimeter setting; (3) Sea-level pressure.

412

1. (1) Dry-bulb temperature; (2) Wet-bulb temperature; (3) Wet-bulb depression.
2. (1) Direction; (2) Speed; (3) Gusts; (4) Peak wind speed; (5) Wind shift.
3. Surface.
4. (1) Visibility; (2) Ambient light level; (3) Runway light intensity.
5. A system of routine barometer comparisons to determine required corrections.
6. Between 30 and 25,000 feet.

413

1. Allows detection of many kinds of weather phenomena. It also allows energy to continue past an initial shower or thunderstorm near the radar, thus seeing additional storms farther away.
2. 2700 to 3000 MHz.
3. (1) RDA group; (2) WBC group; (3) RPG group; (4) MSCF workstation; (5) Principal user systems.
4. Generates and radiates RF pulses, then acquires and processes reflected RF signals to obtain weather radar base data.
5. Continuous, unattended operation.
6. Links the RDA with the RPG.
7. (1) a; (2) b; (3) d; (4) e; (5) d; (6) b; (7) c.

414

1. 9,320 to 9,370 MHz.
2. 100 km.
3. (1) Line of sight; (2) Attenuation; (3) Anomalous propagation.
4. (1) b; (2) a; (3) e; (4) d; (5) d; (6) f; (7) c.
5. The R/T sends the target information to the indicator, which displays the targets on its LCD.

415

1. –112º F to +167º F.
2. 30 nm radius.
3. A blower.
4. JET SCA.

5. By a capacitive probe receiving fresh ambient air through a blower located within the enclosure.
6. The wind speed information derives from an AC signal generated by the wind rotating the propeller. The frequency of the AC signal is directly proportional to the rotation of the propeller, thus it is directly proportional to wind speed.
7. 40,000 Hz.
8. Three.
9. Thermostatically controlled heaters melt any frozen precipitation.
10. The time between transmission of the laser pulses and recovery of reflected backscatter is measured and digitized. The total time is directly proportional to a calculated cloud height.
11. (1) Runway length; (2) Terrain; (3) Mission needs.
12. Perle device.

416

1. Missile alert facilities and helicopter pads.
2. Tiltable 30-foot pole mast, lowered and raised by removable winch system.
3. Four hours.
4. (1) Raw data.
   (2) Stored data.
   (3) Data logs.
   (4) Graph displays.

417

1. Rain, snow, fog, mist, haze, freezing fog, freezing rain, thunderstorms, ice pellets, hail, blowing snow, freezing drizzle, squalls, and showers.
2. (1) Cloud-to-cloud; (2) Cloud-to-air; (3) Cloud-to-ground.
3. Both runway light intensity and active heading, which automatically determine which virtual station meteorological reports are generated from.
4. Removable worm gear winch.
5. (1) CPS server; (2) CPS communication equipment rack; (3) RHLIM; (4) AWA.
6. AWA.
7. RVR calculations.

Complete the unit review exercises before going to the next unit.

Unit Review Exercises

Note to Student: Consider all choices carefully, select the *best* answer to each question, and *circle* the corresponding letter. When you have completed all unit review exercises, transfer your answers to the Field-Scoring Answer Sheet.

Do not return your answer sheet to AFCDA.

33. (411) The average kinetic energy of the molecules in the air is called
    a. visibility.
    b. dew point.
    c. temperature.
    d. relative humidity.

34. (411) What indicates the temperature to which a given parcel of air must be cooled, with constant water vapor content and pressure, to reach saturation?
    a. Visibility.
    b. Dew point.
    c. Temperature.
    d. Relative humidity.

35. (411) Which is *not* a distinctive parameter or observation standard for "wind"?
    a. Speed.
    b. Direction.
    c. Wind shift.
    d. Peak wind shift.

36. (411) What characteristic is the measure of the opacity of the atmosphere and measure of the distance at which an object or light can be clearly discerned?
    a. Visibility.
    b. Dew point.
    c. Temperature.
    d. Relative humidity.

37. (411) Which barometric pressure parameter indicates the altitude above mean sea level of an aircraft on the ground at the location for which the value was determined?
    a. Station pressure.
    b. Sea-level setting.
    c. Altimeter setting.
    d. Sea-level pressure.

38. (412) Which factor is *not* used in calculating dew point?
    a. Wet-bulb temperature.
    b. Dry-bulb temperature.
    c. Wet-bulb depression.
    d. Dry-bulb depression.

39. (412) How many feet above the ground are most automated weather station visibility sensors mounted?
    a. 5.
    b. 7.
    c. 10.
    d. 15.

40. (412) What instrumentally derived value is calculated using different elements of visibility, ambient light level, and runway light intensity?
    a. Prevailing visibility.
    b. Runway visual range.
    c. Runway heading lighting intensity.
    d. Prevailing visual lighting intensity.

41. (412) Station pressure is determined by adjusting the corrected barometric pressure to compensate for the difference between the height of the barometer and the
    a. designated station elevation.
    b. 12-hour mean temperature.
    c. sea-level pressure.
    d. altimeter setting.

42. (412) How many feet is the measurement range for most ceilometers?
    a. 30 and 25,000.
    b. 40 and 30,000.
    c. 45 and 35,000.
    d. 50 and 35,000.

43. (413) What high-powered, dual polarization Doppler radar is used to detect, process, distribute, and display radar weather data?
    a. WSR–22 Next Generation Radar.
    b. WSR–88D Portable Doppler radar.
    c. WSR–88D Next Generation Radar.
    d. AN/TMS–22 Portable Doppler radar.

44. (413) What WSR–88D subsystem generates and radiates radio frequency (RF) pulses, then acquires and processes reflected RF signals to obtain weather radar base data?
    a. Radar data acquisition group.
    b. Radar product generator group.
    c. Wideband communications group.
    d. Master system control function workstation.

45. (413) What WSR–88D subsystem processes base data using stored algorithms to develop a set of derived meteorological products?
    a. Radar data acquisition (RDA) group.
    b. Radar product generator (RPG) group.
    c. Wideband communications group.
    d. Master system control function workstation.

46. (413) What WSR–88D subsystem is used for system testing, troubleshooting, and local product selection, generation, and distribution control?
    a. Principal user systems.
    b. Radar data acquisition (RDA) group.
    c. Wideband communications (WBC) group.
    d. Master system control function (MSCF) workstation.

47. (413) What WSR–88D subsystem ingests and displays radar products from the radar product generator group according to agency specific needs?
    a. Principal user systems.
    b. Radar data acquisition (RDA) group.
    c. Wideband communications (WBC) group.
    d. Master system control function (MSCF) workstation.

48. (414) The frequency range of the AN/TMS–2 Portable Doppler Radar, in megahertz (MHz), is
    a. 9,320 to 9,345.
    b. 9,320 to 9,370.
    c. 9,325 to 9,345.
    d. 9,345 to 9,370.

49. (414) Which is *not* a limitation of the AN/TMS–2 Portable Doppler Radar?
    a. Attenuation.
    b. Line of sight.
    c. Anomalous propagation (AP).
    d. Limited network capability.

50. (414) Range attenuation is due to the radar beam
    a. narrowing as it gets farther from the antenna.
    b. spreading as it gets farther from the antenna.
    c. spreading as it gets closer to the antenna.
    d. narrowing as it gets closer the antenna.

51. (414) What AN/TMS–2 Portable Doppler Radar unit acts as a voltage regulator and uninterruptable power supply?
    a. Radar processor.
    b. Processor drives.
    c. Power conditioning unit.
    d. Processor power control unit.

52. (414) The lower two drives of the AN/TMS–2 Portable Doppler Radar processor drives are used to
    a. store the system/boot drive.
    b. store the actual data collected when the radar performs a scan.
    c. house the Linux operating system and Iris radar processing software.
    d. hold the radar control processing software and all calibration and configuration files.

53. (414) How many personnel are needed to raise the 30-foot AN/TMS–2 mast system?
    a. 1.
    b. 2.
    c. 3.
    d. 4.

54. (415) Which is *not* a measured parameter of the AN/FMQ–19 Automated Meteorological Station?
    a. Visibility.
    b. Ice accretion.
    c. Lightning detection.
    d. Runway visual range (RVR).

55. (415) What is the lightning detection range, in nautical miles, of the AN/FMQ–19 Automated Meteorological Station?
    a. 30.
    b. 45.
    c. 50.
    d. 100.

56. (415) What allows the AN/FMQ–19 Automated Meteorological Station to be viewed, disabled, and maintained through a website?
    a. Joint Environment Toolkit (JET).
    b. Central processing station (CPS).
    c. Field data collection unit (FDCU).
    d. Graph displays.

57. (415) How is AN/FMQ–19 Automated Meteorological Station relative humidity data received into the system?
    a. By receiving data from the sensor collection appliance (SCA).
    b. By calculating the difference between the ambient air measurement and the dew point.
    c. A capacitive probe receiving fresh ambient air through a blower located within the enclosure.
    d. A resistive probe receiving fresh ambient air through an air intake located outside the enclosure.

58. (415) The AN/FMQ–19 Automated Meteorological Station freezing rain sensor measures up to how many inches of accumulation?
    a. 1.
    b. 2.
    c. 3.
    d. It does not measure accumulation.

59. (415) The AN/FMQ–19 Automated Meteorological Station contains how many barometers?
    a. 1.
    b. 2.
    c. 3.
    d. 4.

60. (415) In the AN/FMQ–19 Automated Meteorological Station precipitation gauge, what reduces snow falling into the bucket?
    a. Environmentally controlled transducer.
    b. Thermostatically controlled heaters.
    c. The tipping bucket.
    d. Gravity.

61. (415) What is the only sensor mounted on the AN/FMQ–19 Automated Meteorological Station 10-meter tower?
    a. Wind monitor.
    b. Visibility sensor.
    c. Lightning detector.
    d. Precipitation gauge.

62. (415) At what runway length, in feet, would an airfield need the AN/FMQ–19 Automated Meteorological Station midfield sensor group?
    a. Up to 5,000.
    b. Over 5,000.
    c. Over 8,000.
    d. Civilian runways under 8,000 feet.

63. (416) The AN/FMQ–22 Automated Meteorological Station 30-foot pole mast raises and lowers
    a. by a removable winch system.
    b. by a telescoping-pole winch system.
    c. manually by technicians physically moving the hinged pole.
    d. manually by technicians physically moving the telescoping pole.

64. (416) What type of AN/FMQ–22 Automated Meteorological Station data displays the *entire* current day's raw data log?
    a. Data log.
    b. Stored data.
    c. Graph displays.
    d. Raw data drive.

65. (416) In the Joint Environment Toolkit (JET) architecture, before raw sensor data is sent to the sensor collection appliance (SCA), a converter changes the serial data to
    a. formatted sensor data.
    b. processed sensor data.
    c. Tera Term information.
    d. Internet protocol format.

66. (417) What type of lightning strike detection is *not* measured by the AN/FMQ–23 Automated Meteorological Station?
    a. Cloud-to-air.
    b. Air-to-ground.
    c. Cloud-to-cloud.
    d. Cloud-to-ground.

67. (417) In the AN/FMQ–23 Automated Meteorological Station, where do the outputs of the meteorological sensors connect to?
    a. Runway heading and light intensity monitor (RHLIM).
    b. Joint Environment Toolkit (JET).
    c. Field data collection unit (FDCU).
    d. Data collection platform (DCP).

68. (417) What AN/FMQ–23 Automated Meteorological Station unit is used to automatically determine which virtual station meteorological reports are generated from?
    a. Runway heading and light intensity monitor (RHLIM).
    b. Joint Environment Toolkit (JET).
    c. Field data collection unit (FDCU).
    d. Data collection platform (DCP).

69. (417) What component(s) of the AN/FMQ–23 Automated Meteorological Station tower mast provide an installation point for obstruction lights?
    a. Cross arm.
    b. Obstruction lights are not mounted on the tower.
    c. Mountable antenna brackets on each side of the tower.
    d. Obstruction lights are mounted to the data collection platform (DCP).

70. (417) The runway heading and light intensity monitor (RHLIM) sends data directly to the central processing station (CPS) for use in
    a. calibrating runway edge and center light brightness.
    b. calculating taxiway approach lighting brightness.
    c. Airport Weather Advisory (AWA) outage reports.
    d. runway visual range (RVR) readings.

Please read the unit menu for unit 3 and continue ➔

Student Notes

Unit 3. Air Traffic Control Communications and Tactical Airfield Systems

3−1. Tower Communications Equipment..... 3–1

418. AN/FSC–127 Enhanced Terminal Voice Switch.....3–2

419. Digital audio legal recorder 3–8

3−2. Mobile and Deployable Air Traffic Control Systems..... 3–12

420. AN/MSN–7 Tactical Control Tower 3–13

421. AN/TRN–48 Deployable Tactical Air Navigation System.....3–25

THE AIR FORCE'S air traffic control (ATC) mission is critical. Without knowledgeable Radar, Airfield & Weather Systems technicians, there would not be reliable communications and the flying mission would never get off the ground. This unit provides an overview of crucial tower communications systems in support of fixed, mobile, and deployable environments around the world.

3−1. Tower Communications Equipment

Almost every Air Force base or location with an ATC tower will have the AN/FSC–127 Enhanced Terminal Voice Switch (ETVS) and digital audio legal recorder (DALR). Getting to know how these systems operate will help you in your everyday interactions at the ATC tower.

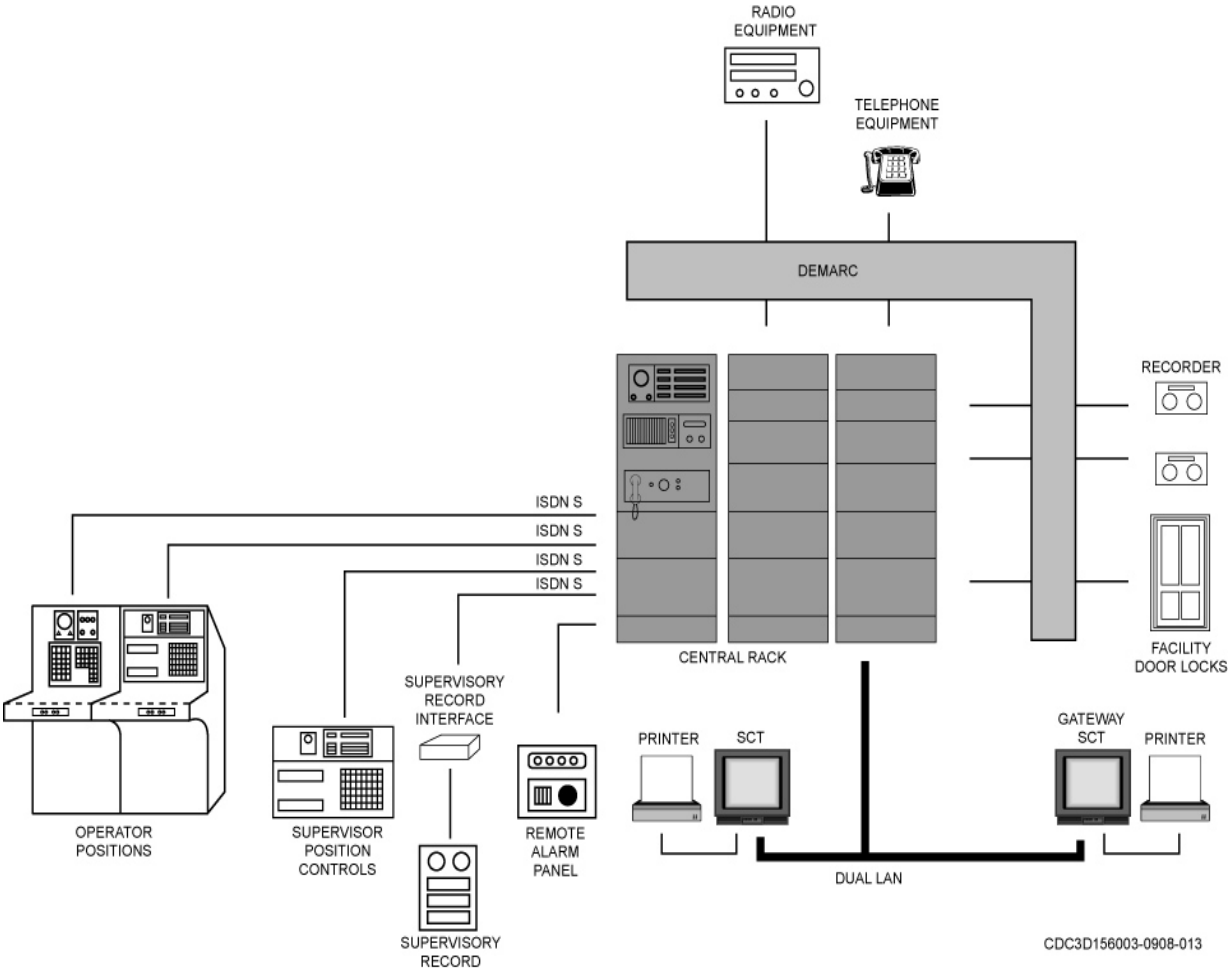

Figure 3–1. ETVS.

418. AN/FSC–127 Enhanced Terminal Voice Switch

Imagine a tower with several operators, each with his/her own rack of transmitters and receivers where they have to plug a headset or microphone into a different radio each time they need to change frequency. Controlling air traffic would be nearly impossible in this environment. This is not the case with the ETVS, which makes things simpler and safer.

Basic components

The ETVS consists of two major assemblies—communications console and the central equipment—linked together by system cabling. The tower houses the communications console, which is divided into a number of operator positions. Each operator position has a specified ATC function to perform. Figure 3–1 shows the overall ETVS system layout.

Positions

A typical ATC tower console has five operator positions and a supervisor position. Personnel at each of the positions have varying responsibilities for ensuring safe airfield operations. The following table provides a brief overview of these positions and their functions.

Typical ATC Tower Console Positions	
Position	**Description**
Watch supervisor	Monitors all tower operations and observes all airfield activities to maintain general situational awareness of air traffic. Responsibilities include monitoring radio and intercom transmissions plus correcting any controller mistakes. The supervisor is ultimately responsible for everything that happens in the tower.
Local	Communicates with all aircraft within a 5-mile radius of the tower. Directs approach and landing patterns, clears aircraft for takeoffs, and observes the entire airfield.
Ground	Communicates with aircraft and vehicles on the flight line. Directs all aircraft on the ground and for transmitting current weather and field conditions to departing aircraft.
Flight data	Passes important data to agencies associated with flightline operations—for example, providing inbound and outbound departure times to base operations. Broadcasts weather and field information and activates crash response teams.
Coordinator	Coordinates inbound aircraft from other control towers (both military and civilian). Uses radar to establish arrival and departure sequencing with the local position's controller.
Supervisor of flying (SOF)	Usually a pilot rather than an air traffic controller. Monitors flying squadron operations and activities and coordinates missions and training.

Central equipment

The central equipment is usually located on the floor below the tower cab. Central equipment consists of various cabinets housing the required circuitry used in the transfer of ATC data. One maintenance position is located at the central equipment rack. The maintenance position facilitates maintenance and troubleshooting functions by providing system access to maintenance technicians. This position can be configured with the same capabilities as any operator position.

Key system features

Unlike older communications consoles that were hard-wired to the central equipment with patch cords and cables, the ETVS is software-driven.

Software

ETVS software enables ATC supervisory personnel to change interphone, intercom, and radio frequency connectivity within the facility. One or more designated interactive terminals provide computer-based reconfiguration for single positions or all ETVS positions. Maintenance personnel can accomplish physical reconfiguration by adding single positions or single external interfaces to the system. This allows system expansion without the loss of communication capabilities.

The ETVS includes automated diagnostic equipment that provides real-time monitoring of critical system components. Audio and visual alarms located at configuration/maintenance terminals and at designated operator positions (through use of an optional remote alarm unit) alert personnel of system failures. Both the supervisor configuration terminal (SCT) and the Gateway SCT identify system faults.

Touch entry display

A touch entry display (TED) is a LCD panel that is touch-sensitive and completely software driven (fig. 3–2). Instead of pushing mechanical buttons, operators use a touch screen. The TED interfaces with the central equipment and is the primary means of communications control.

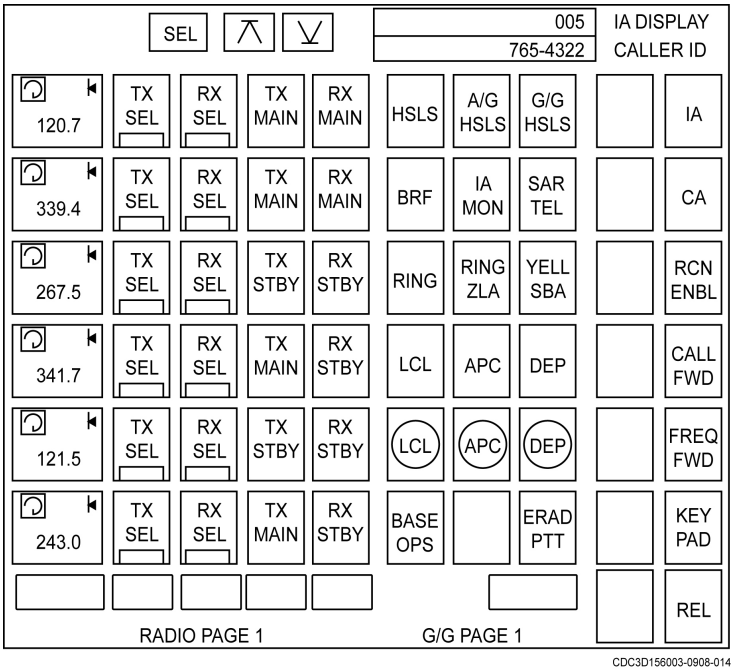

Figure 3–2. TED.

The TED separates into sections called pages. The left side of the TED displays air-to-ground pages, the middle area displays either ground-to-ground (G/G) pages or the keypad, and the right side displays the special function page. The push buttons, referred to as TED keys, are programmable for the radio, intercom, and landline connections required for each position. Key programming can be changed at the SCT.

Radio control features include the ability to select among several receiver side tone options for each radio interface. New landline circuit features include a speed-dial capability. Other operational features include intercom/push-to-talk override, radio frequency add/delete, preset conference calling, caller ID, audio monitoring, relief briefings, and frequency forwarding.

Supervisor configuration terminal

An ETVS system includes up to two SCTs, one in the tower and one in the radar approach control (RAPCON) facility, if the base has one. The SCTs interface with central equipment and use

individual UPS for power. Each SCT terminal is a complete microcomputer that uses the disk operating system (DOS), with an accompanying video display and keyboard. The SCT also monitors the status of various system components.

The SCT provides the following capabilities:

- Displays current system status on the video monitor.
- Continuously checks for system faults. Should a unit fail, an alarm sounds and a screen displays the fault location.
- Ability to add, delete, rename, copy, view, modify, and activate global and local maps. Maps are displays of position "programming," that is, the frequencies and functions that are enabled at each position.
- Position reconfiguration.
- Change system passwords.

Radio subsystem

The radio subsystem ports all air-to-ground communications to the system (fig. 3–3). It supports two interface types—one where the radio equipment is local to the central equipment rack and the other where the radio equipment is remote to the central equipment. Radio channels for local radio equipment interface with central equipment through radio processor cards. Redundancy also allows two radio processor cards to be associated with each frequency. Switchover between processors is transparent to the operator. An RS–232 link passes card status and switchover control between the two cards. Operators control main/standby (M/S) transmitter and receiver switchover from their positions.

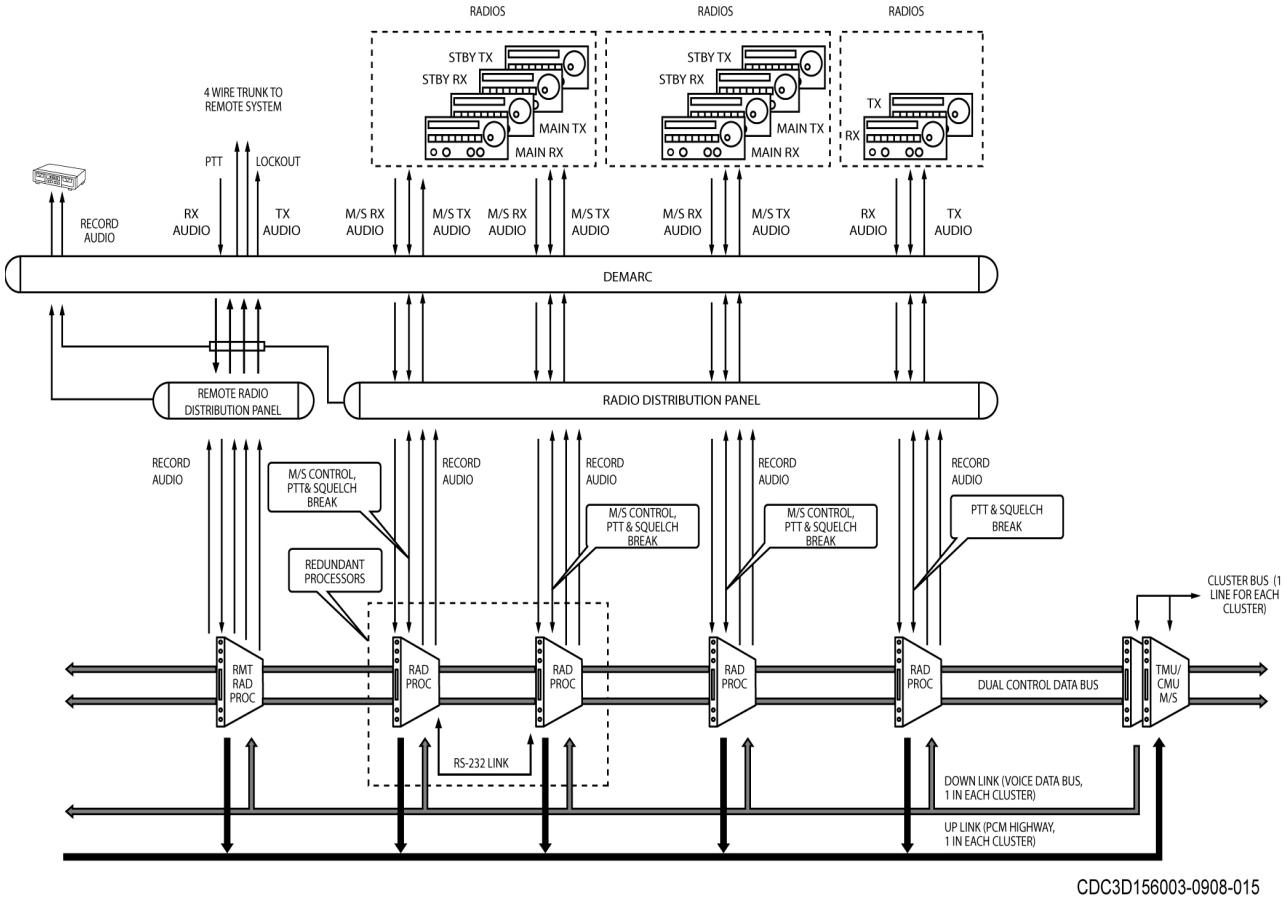

Figure 3–3. ETVS radio subsystem.

Radio distribution panel

A radio distribution panel provides an interface between the demarcation panel and the radio processor cards. Audio, keying signals, and M/S control lines connect through this panel, as well as the record lines from the radio processor cards to the recorders. The panel is *not* a line replaceable unit (LRU); it is part of the central equipment.

Telephone subsystem

The telephone subsystem interfaces all telephone communications (fig. 3–4). The subsystem consists of telephone card cages, interface cards, ring generator, phone conferencer pairs, and timing multiplexer/cluster multiplexer units (TMU/CMU).

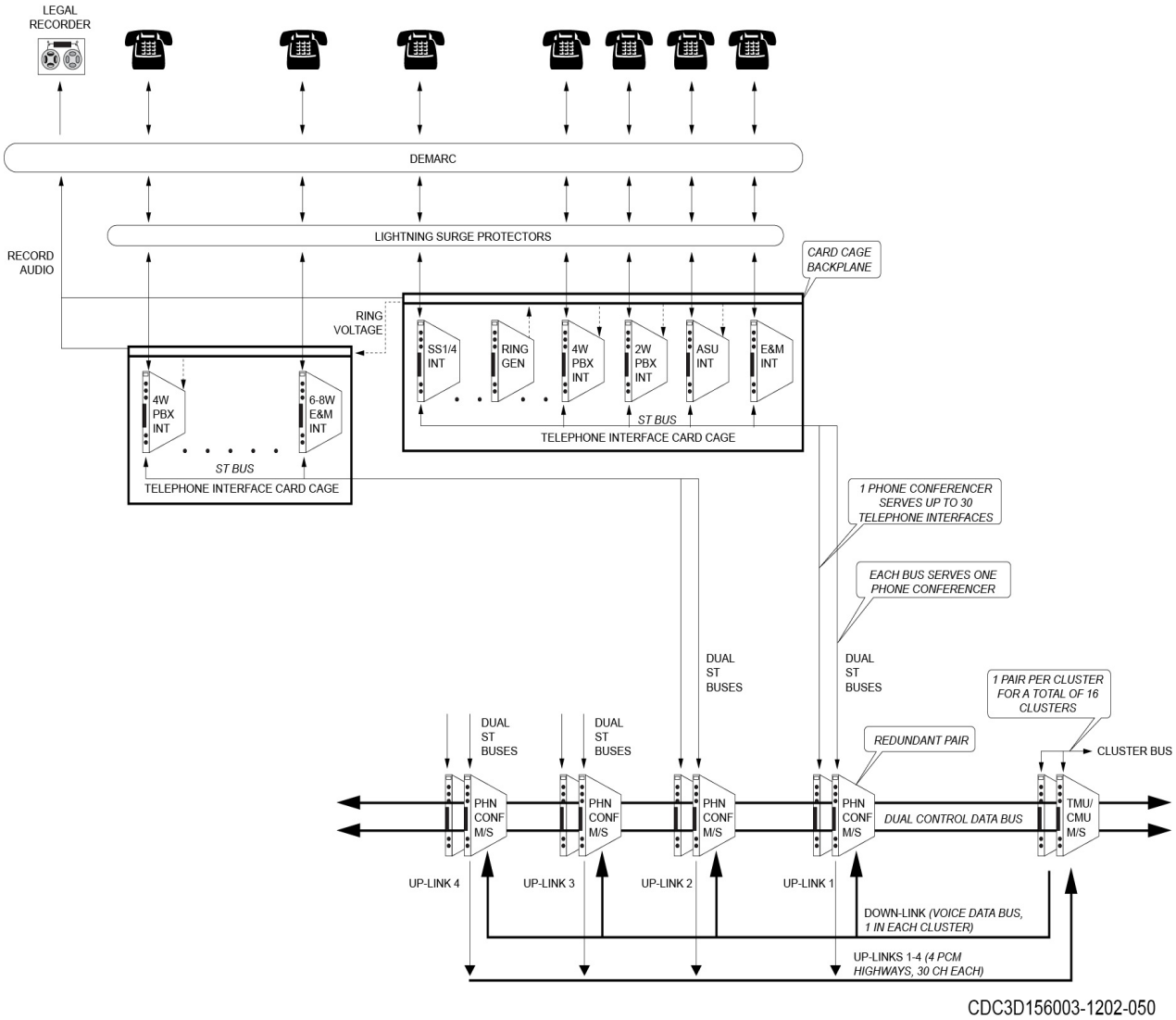

Figure 3–4. ETVS telephone subsystem.

Each card cage holds up to 16 telephone cards and up to 14 phone cages in a central rack. A single ring generator mounted in one of the telephone card cages provides ring voltage to all interface cards requiring it. A redundant phone conference pair links up to 30 interface cards to the TMU/CMU and each TMU/CMU can support up to four phone conference pairs for a total of 120 multiplexed channels.

Telephone interface cards support these signaling types:

- Two-wire public branch exchange (PBX).

- Four-wire PBX.
- Automatic signaling unit (ASU).
- E and M (ear and mouth).
- Selective signaling (SS-1/SS-4).

The PBX interfaces support standard telephone voice communications, while the other interfaces support various specialized direct line (shout line) and conferencing circuits. The type and quantity of each telephone interface installed in the system depends on the individual site requirements and may change after initial installation.

Position record

Recording of all position audio activity originates at the position electronics. The position electronics process the audio as a digital signal. However, coder/decoders (CODEC) convert it to an analog signal before sending it to central equipment. An output to external recorders is on the appropriate operator distribution panel.

Block diagram theory of operation

Figure 3–5 is an overall functional block diagram of the ETVS. Keep in mind that not all system connections are shown in this diagram. All radio, telephone, and record circuits connect to central equipment through a demarcation panel. Operator and radio lines connect to the central equipment rack at operator distribution panels and radio distribution panels respectively. Each operator distribution panel connects up to 16 operator positions and their associated record capabilities.

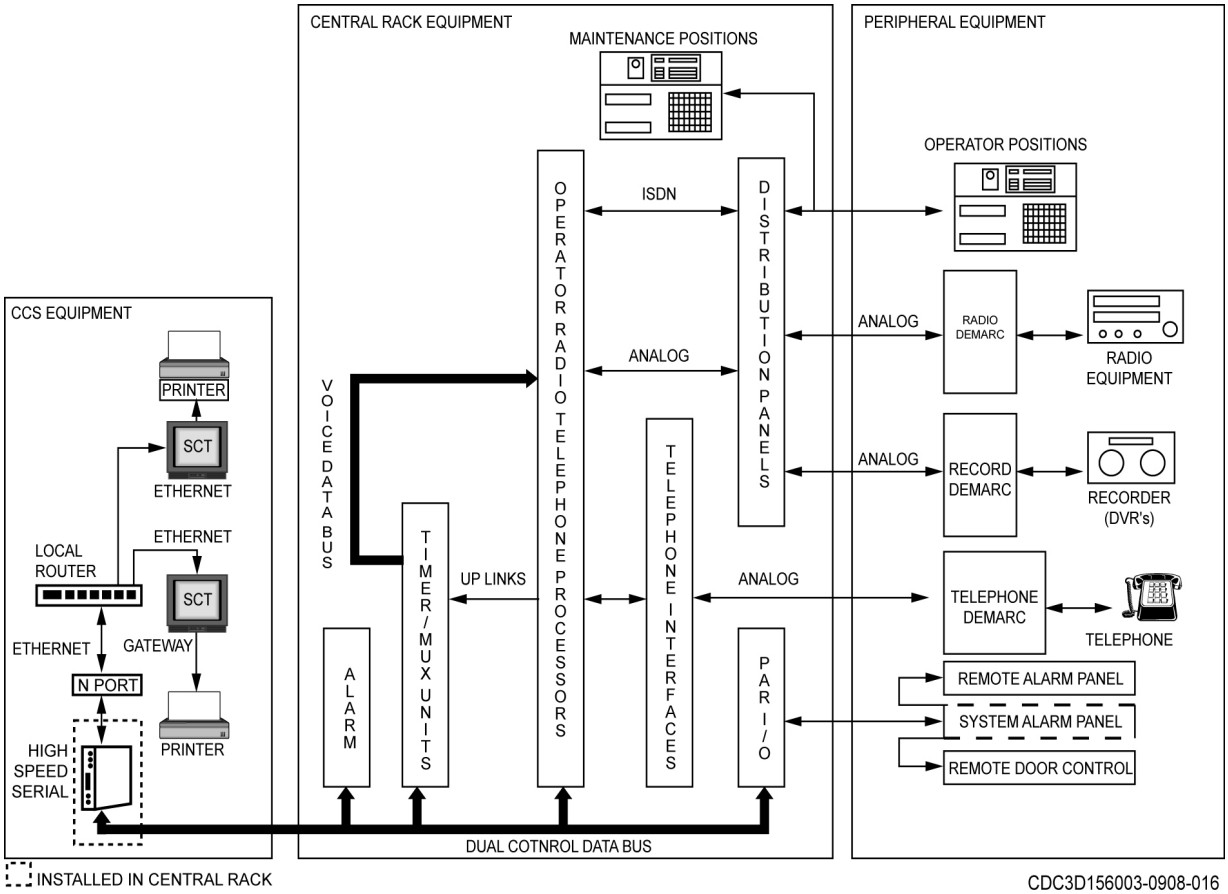

Figure 3–5. ETVS functional block diagram.

Processor cards provide central equipment interface for radio, operator, and telephone voice communications. Each telephone processor interfaces one telephone line and communicates over a serial telecommunications (ST) bus with a phone conferencer that can handle up to 30 telephone lines. Figure 3–5 indicates the processors, including the phone conferencer, by boxes labeled operator, radio, and telephone processors.

Operator, radio, and telephone processors communicate multiplexed digital intelligence as serial data streams over up-links to the timer/multiplexer (MUX) units. The timer/MUX units further multiplex the streams and route them to the 8-bit parallel voice data bus downlink.

Positions are configured with direct access (DA) and indirect access (IA) controls for establishing telephone communications. Special function keys provide support features such as call conferencing and call forwarding. Configured DA and IA keys are used for selecting interphone circuits and intra-facility intercom channels that provide position-to-position communications with override capabilities for emergencies or critical communications.

The operator uses radio controls on the TED for frequency selection, monitoring, and M/S transmitter/receiver selection. An emergency frequency feature provides a direct interface to a select number of transmitter and receiver frequencies. By pressing a single key, the operator can seize a particular radio frequency (channel) or group of frequencies for emergency communications.
The system routes all radio, telephone, and operator audio activity to customer-furnished recorders. In addition, recorders located at the supervisor position record the audio activity of selected positions. Maintenance personnel may also monitor the audio activity of selected positions at the maintenance position speaker.

During radio transmit, a key press (on the TED) at the position initiates communication for an operator. The system recognizes the request and provides a signal path from the operator to the selected transmitter. Microphone audio from the position converts to digital form for transmission to the central equipment. An integrated services digital network (ISDN) links the positions to the central equipment. At the central equipment rack, the operator processor for the selecting position processes the signal and places it on a voice data bus (VDB). The radio processor picks it off the VDB and sends it to the associated device port. From there, it travels to the selected transmitter.

During radio receive, the audio signal is routed through its associated device processor (again, a radio processor). The radio processor digitizes the signal and places it on the VDB. The operator processor picks off the associated signal from the VDB and routes it to its associated operator position. At the position, the digitized signal converts back to analog and is applied to the receive-audio circuits.

To initiate a telephone call, the operator selects the TED key associated with the desired line. This sends a message over the ISDN data channel to the position’s operator processor card in the central equipment; this signal causes the telephone circuit to activate. The telephone conferencer card responds by picking up the operator’s audio from the VDB and passes it along to a corresponding line interface card, which provides the analog interface with the telephone line.

The configuration and control subsystem (CCS) designates operator position functions and system configuration through software programs installed in the SCT and Gateway SCTs. The SCT, serving as a supervisor workstation, can reallocate the system assets through menu-driven modes of configuration.

An SCT and Gateway SCT are both capable of running system configuration programs. This provides a user interface to establish system configuration, monitor operational status, and perform maintenance functions.

The SCT and Gateway SCT reside on a LAN and interface with a dual control data bus (CDB) located at central equipment. The LAN connects to an Ethernet port in the central rack. The port connects to a high-speed serial interface card that resides on the CDB. The CDB enables all the

central equipment microprocessors to communicate with one another and with the CCS equipment through the high-speed serial interface.

An alarm subsystem reports alarms received from the system alarm panel to the CCS over the CDB and the LAN. The same alarms are at the system alarm panel and the remote alarm panels. This subsystem also monitors the facility doors and provides control interface to the door locks.

419. Digital audio legal recorder

The DALR provides the legal recording capability between air traffic controllers, pilots, ground-based ATC terminal radar approach control facilities, and towers. This acquisition replaces and updates obsolete equipment at current FAA and DOD sites.

A DALR is a computerized, multiple-channel, voice recording/reproducing system that runs on a computer platform (fig. 3–6). The digital recorder unit (DRU) is a computer that uses a Windows-driven computer workstation to control its functions and monitor the system.

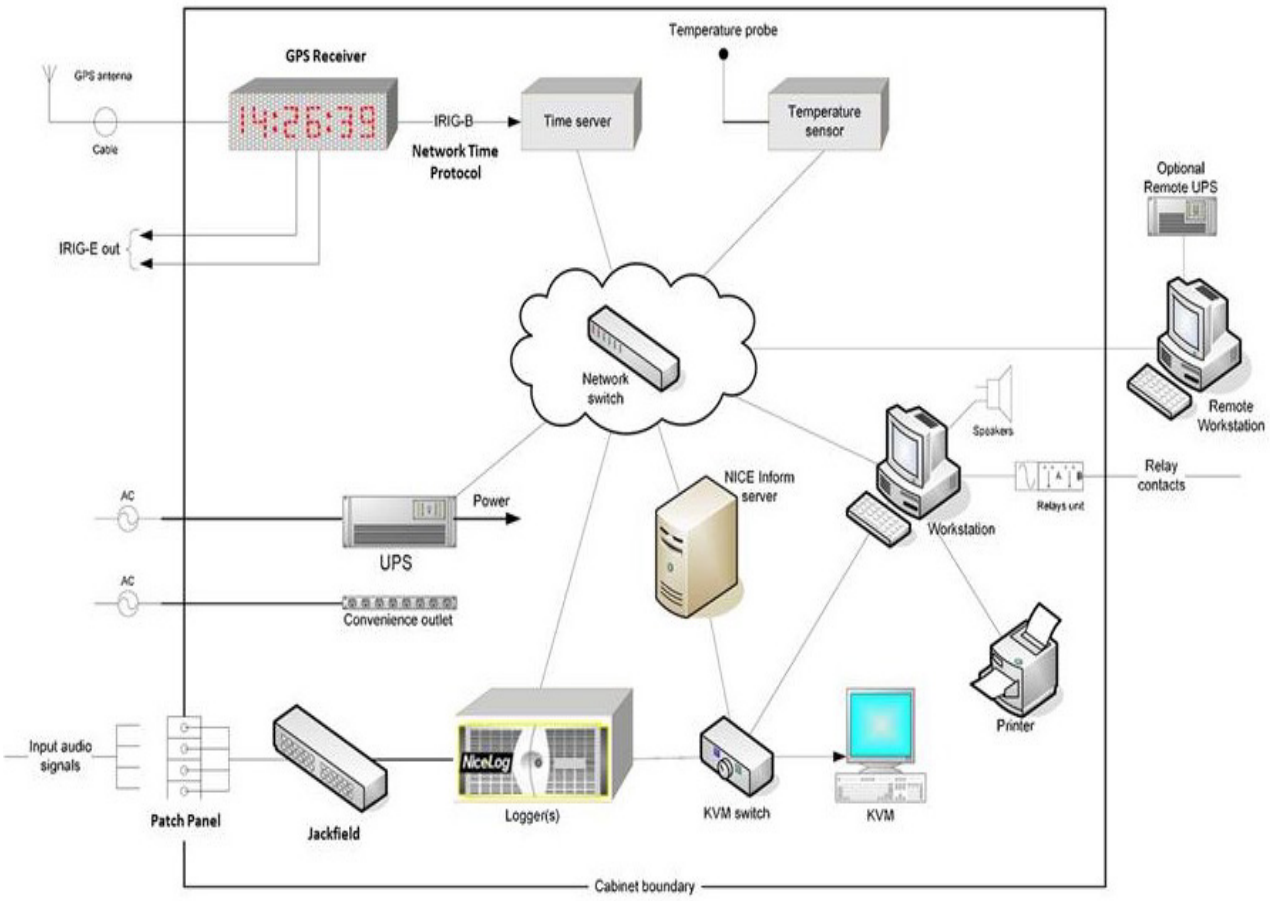

Figure 3–6. DALR system.

System platform

The DRU provides simultaneous recording of multiple channels onto a server hard drive. Computer workstations control DRU record and playback. The DRU records audio on a hard drive and the recording can be copied to a compact disc (CD), digital video disc (DVD), or universal serial bus (USB) device. The audio on the hard drive is available for immediate playback.

Components

Several different components make up the DALR system. The following table covers the most important.

DALR System Components	
Component	**Description**
Recorder/Logger	The logger is the recorder component. • The DALR1 logger is the NiceCall Focus III, which can record up to 48 channels. • The DALR2 logger is the high-density logger (HDL), which can record up to 144 channels. Contains the analog line interface (ALI) cards (24 input channels each) used to capture the analog audio signals and the NiceLog software to convert and compress audio signals into digital format. The recorded audio is retrieved and played back using the Nice Inform software from the Inform server.
Inform Server	Application server and access hub of the system. Provides all security functions including account administration and authentication of any client workstation actions. Provides the central repository of the application code, which downloads on demand by the workstations when a user logs into the DALR system.
Maintenance Workstation	Allows users to monitor, search, playback, and distribute recorded audio through the Nice Inform application. Contains the network monitoring software called Castle Rock Simple Network Management Protocol Management Console (SNMPc). SNMPc monitors the operational status of all networked devices, generates event messages, and triggers the alarm relay unit in the event of a serious malfunction.
LCD Drawer	Contains the monitor, mouse, and keyboard. Appears as a fold-down tray, mounted in the cabinet. This represents the main physical user interface into the DALR system.
Alarm Relay Unit (ARU)	USB device connected to the workstation. Provides alarm and warning relay contacts.
Software	Several pieces of software operate the DALR. The software package name is Nice Application Suite. This software package manipulates various features within the system such as connecting to DRUs, printing DRU status, display customization, and finding, selecting, playing, and monitoring audio. Several maintenance features are available through software applications.
Network Switch	Cisco Catalyst 2950 12-port switch. Interconnects the Ethernet connections from each network-enabled device, which includes the logger, Inform server, network time protocol (NTP) server, temperature sensor, UPS, and workstation
UPS	Monitors the AC power from the site. In the event of a site power loss, it provides at least 30 minutes of backup power. After the backup power is exhausted, the UPS safely shuts down both the workstation and the logger in order to avoid damaging the hard drives from abruptly losing power.

Capabilities

The DALR is capable of recording and recalling audio for an extended period. These recordings need a very accurate time stamp in order to know when audio was recorded. Programmable system alarms are also available to alert users when a malfunction occurs. These system capabilities are discussed below.

Recording capacity

A logger module interfaces to the analog lines through a Nice Systems proprietary peripheral component interconnect (PCI)-based line card known as the ALI. The ALI card supports 24 channels per card and is common to both the smaller and larger loggers. The logger module is responsible for the online audio store, providing a minimum of 45 days of online storage. The applications server module is responsible for managing user and system security and logs, providing voice and data to the workstations for replay, and managing the quarantined audio store. This separate quarantine store ensures that online recording capacity never has a compromise and that it is possible to back up all quarantined audio in a single operation (for example, to create a secure off-site copy of all quarantined audio for disaster recovery purposes). Smaller systems (up to 48 channels, DALR1) have the capacity to store 9,000 channel-hours of audio for quarantined incidents. For systems with more than 48 channels (DALR2), capacity for 45,000 channel-hours of quarantined audio is available. The capacity is a configuration option and more capacity can be provided if considered necessary. The DALR communicates over IP-based protocols for voice and data transfer from the loggers and application server to the workstations, so remote workstations benefit from identical capabilities and performance to locally positioned, rack-mounted workstations. Deployment is possible in any location that has IP connectivity to the rest of the DALR.

Time stamp

The GPS receiver acquires signals from geosynchronous satellites and provides date and time information for synchronizing time over the DALR network. The acquisition of three satellites provides for an accurate time stamp. The time is distributed by using the Simple Network Time Protocol (SNTP), which is a simplified version of NTP. All computer devices within the network use this NTP time as the accurate reference for time synchronization

Alarms

An alarm relay unit is a USB device connected to the maintenance workstation. SNMPc, running on the maintenance workstation, controls this unit. It provides the alarm relay contacts to drive the remote alarm unit for external alarm indicators. Operators are able to program the DALR to provide multiple alarm functions. Some of these include alerts to users when channels are inactive or failure of a specific channel.

Audio signal flow

The GPS receiver gathers time from GPS satellites, which it uses to synchronize the time on all system components through NTP. Incoming audio signals are received, digitized, and recorded by a logger. This information is stored for either 45 or 15 days depending on the site requirements. The audio indexes using the GPS time by Nice Inform, which stores these indices on the server hard drive. Any created incident data is also stored on the server hard drive. A workstation (remote or maintenance) uses an Internet browser-based client application to run Nice Inform from the server. The workstation provides access to monitor audio with a 4-second delay from real time, search the server for audio recorded in the past, and attach audio to incident data creating a legally certified distribution in .wav format. Once created, this distribution can be copied to a CD, DVD, or USB storage device.

Set test

Each DRU in the system continuously performs a self-test to check the status of its various hardware components, including audio boards, hard disks, and the operations that they are performing. Warning and error messages display if the self-test discovers any problems. The self-test manually initiates on the connected DRU if desired.

Self-Test Questions

After you complete these questions, you may check your answers at the end of the unit.

418. AN/FSC–127 Enhanced Terminal Voice Switch

1. Identify the two major assemblies of the ETVS.

2. What ETVS position is ultimately responsible for everything that happens in the tower?

3. Which ATC console position monitors and coordinates flying squadron operations, activities, missions, and training?

4. Where is the maintenance position located?

5. Which ETVS component is the primary communications control mechanism?

6. Which ETVS device can program TED push-button keys?

7. What type of link does the radio subsystem use to pass card status and switchover control between redundant radio processor cards?

8. What is the maximum number of telephone cards that a card cage can hold?

9. What is the purpose of the central equipment processor cards?

10. What is the purpose of the DA and IA controls?

11. What links the positions to the central equipment?

12. What enables all the central equipment microprocessors to communicate with one another and with the CCS equipment?

419. Digital audio legal recorder

1. How is DRU record and playback controlled?

2. What DALR component provides all security functions including account administration and authentication of any client workstation actions?

3. In the event of a power failure, how long will the UPS power the DALR system?

4. What is the recording capacity of the 48 Channel DALR?

5. What is the source of time of day for time stamp recording purposes?

6. What does each system DRU continuously perform to check the status of its various hardware components?

3−2. Mobile and Deployable Air Traffic Control Systems

During our recent and continuing involvement in operations around the globe, many technicians were sent out to set-up and sustain tactical airfield systems to allow around-the-clock air operations. Thanks to their efforts, the operations they support are major staging areas for people and material arriving by air, and numerous special operations that may not be reported in the news.

We are required to deploy aircraft and equipment to support our nation's objectives. Unfortunately, most deployed locations do not come with fully equipped and well-maintained flight lines. Instead, we are tasked with going in and setting up a functional base with little more to work with than a strip of concrete. A critical priority, when establishing a staging area, is to provide reliable navigational aids for landing and departing aircraft. The first and arguably most important navigational aid is the tactical air navigation system (TACAN).

This section discusses the AN/MSN–7 Tactical Control Tower capabilities, limitations, and theory of operation. This section also provides a similar overview of the AN/TRN–48 Deployable Tactical Air Navigation System.

420. AN/MSN–7 Tactical Control Tower

The AN/MSN–7 is a highly mobile, quick response, ATC facility capable of providing control tower services. Its primary mission is to provide ATC services to austere assault zones and to bare-base locations allowing launch and recovery during air operations in the initial phases of a deployment. This need also extends to supporting the Global Reach-Global Power composite wing concept. The AN/MSN–7 also meets critical requirements if an air base's primary control tower capability is inoperative due to natural or unnatural causes and tower services need to be quickly restored in order to recover aircraft or continue flight operations.

Capabilities and limitations

System leading particulars are listed in the table below. Refer to 31R5–2MSN7-1-WA-1, *Operation and Maintenance Instruction Manual with Circuit Diagrams - Central, Communication ANMSN-7,* for further information.

AN/MSN–7 Capabilities and Limitations	
System Parameter	**Description**
Operating temperature	-40° F to +120° F.
Operational wind velocity	40 knots (continuous) and up to 70 knot gusts (5-10 second duration) from any direction without serious degradation in performance, with maximum slope of ±10°.
Ground-to-air (G/A) channels	Any seven of 1360 very high frequency (VHF) transceiver channels or 7000 ultrahigh frequency (UHF) transceiver channels. Channels may be tuned in increments of 25 kHz.
Internal VHF land mobile radio (LMR) channels	Any two channels from 136 to 174 MHz. Channels may be tuned in increments of 12.5/25.0 kHz.
Internal UHF LMR channels	Any two channels from 380 to 470 MHz. Channels may be tuned in increments of 12.5/25.0 kHz.
External communication channels	Provisions for up to six external radios (must be connected to separate antennas and power source).
Range	Up to 15 miles line-of-sight to aircraft at 1,000 feet altitude.
Telephone/crash phone	Nine 2- or 4-wire landlines. May be connected to manual and dial-type central offices, including PBX/central office, FAA SS-1/SS-4, auto ringdown, or universal. An additional three auto ringdown landlines are dedicated to the crash phone.
Meteorological aids	
Temperature	Measures temperature in 1-degree increments ±0.5 °F.
Wind direction	Measures wind direction in 1-degree increments ±5°.
Wind speed	Measures wind speed in MPH ±1.1 MPH at speeds from 5 to 99 MPH (based on 2-minute average).
Altimeter	Measures absolute atmospheric pressure referenced to sea level in inches of mercury, ±0.033 inches/Hg.
Light gun (2 each)	Red, green, and white for signaling.
Voice recording system	30-channel recording to an internal hard-drive, with dual DVD-random access memory (RAM) drives. The hard-drive can store approximately 2500 hours of continuous audio at 2:1 compression methodology. In addition, each DVD-RAM disc can store approximately 300 hours of continuous audio (2:1 compression).
Primary power	Requires a 25-kW, 3-phase, 50-60 Hz power source (from support vehicle or utility power).

Functional groups

Operationally, the AN/MSN–7 is comprised of six functional groups (fig. 3–7).

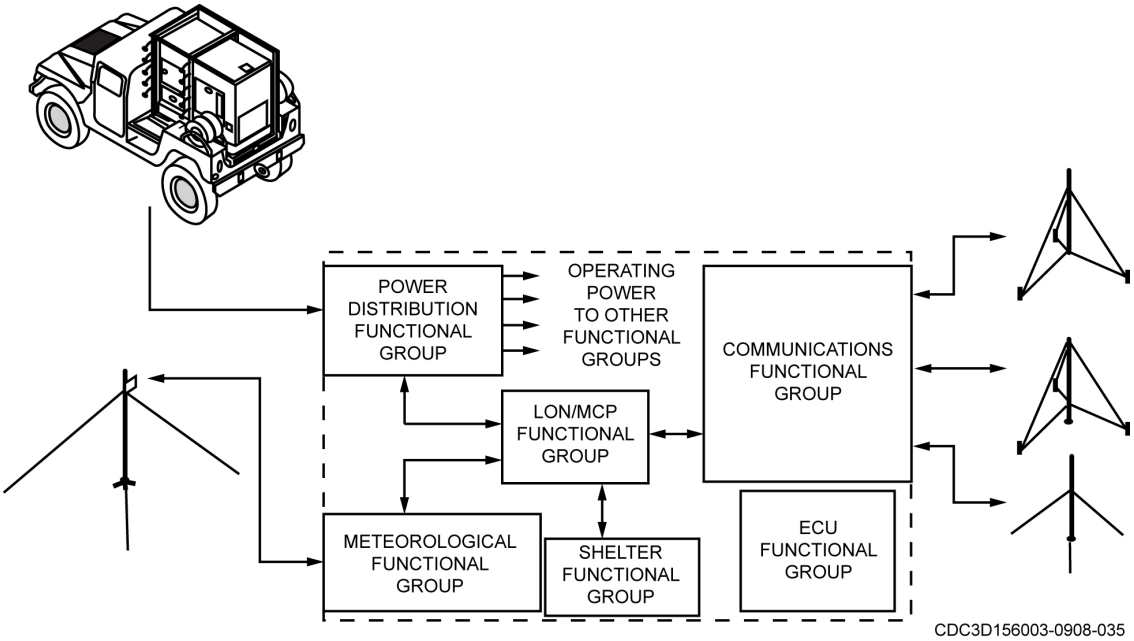

Figure 3–7. AN/MSN–7 functional groups.

The following table describes each functional group. A full description of operation theory will be discussed for each group later in this section.

AN/MSN–7 Functional Groups	
Group	**Description**
Power Distribution	The power distribution functional group provides necessary equipment and interfaces to connect and distribute all power required for the AN/MSN–7.
Meteorological	The meteorological functional group (MFG) provides the sensors, data processors, and displays that provide the operators with current wind, temperature, altitude data, and current time.
Communications	The communications functional group provides the radios, antennas, landlines, control, and switching required for radio and landline communication functions between the AN/MSN–7 operators and aircraft, fixed ground stations, and mobile ground stations. This group provides centralized communications control and selection capabilities for air traffic controller access and operation.
Environmental Control Unit (ECU)	The ECU functional group is comprised of two self-contained units that condition the air in the shelter. Note that the ECU operates from 120 VAC and is *not* available when running the shelter from vehicle battery power. Also, note that this is a *closed system*, and air recirculates in the shelter.
Local Operating Network (LON)/Monitor Control Panel (MCP)	The LON/MCP functional group monitors and displays the status of the other functional groups in the AN/MSN–7, selects and controls window heat mode, and configures and trips selected direct current (DC) power distribution panel A6A2 circuit breakers during limited power mode.
Shelter	The shelter functional group provides lighting, window heat, extendible roof lift, and hazard detector functions for the AN/MSN–7.

Deployment options and transportability

The AN/MSN–7's transportability and mobility features allow it to support a variety of deployment options and secondary missions. It is capable of being driven up to 50 MPH on improved roads and capable of withstanding individual or a combination of environmental conditions.

Some deployment options include ATC services in support of alternate landing areas such as off-base or alternate landing strips and airports, roadways, and bare base installations. The AN/MSN–7 can deploy and operate in conjunction with, or separately from, existing mobile radar facilities. The AN/MSN–7 can operate under any worldwide service conditions. All of the equipment is self-contained on two high mobility multi-purpose wheeled vehicle-heavy variant (HMMWV-HV) vehicles (a primary vehicle and a support vehicle). It can be easily transported on fixed-wing aircraft by simply driving the vehicles directly onto the transport without disassembly, crating, or palletizing. If necessary, the AN/MSN–7 shelter and generator/storage platforms can be loaded or unloaded from the HMMWV-HV using a standard forklift or crane (using a lifting sling without separators). Figure 3–8 shows a normal deployment setup.

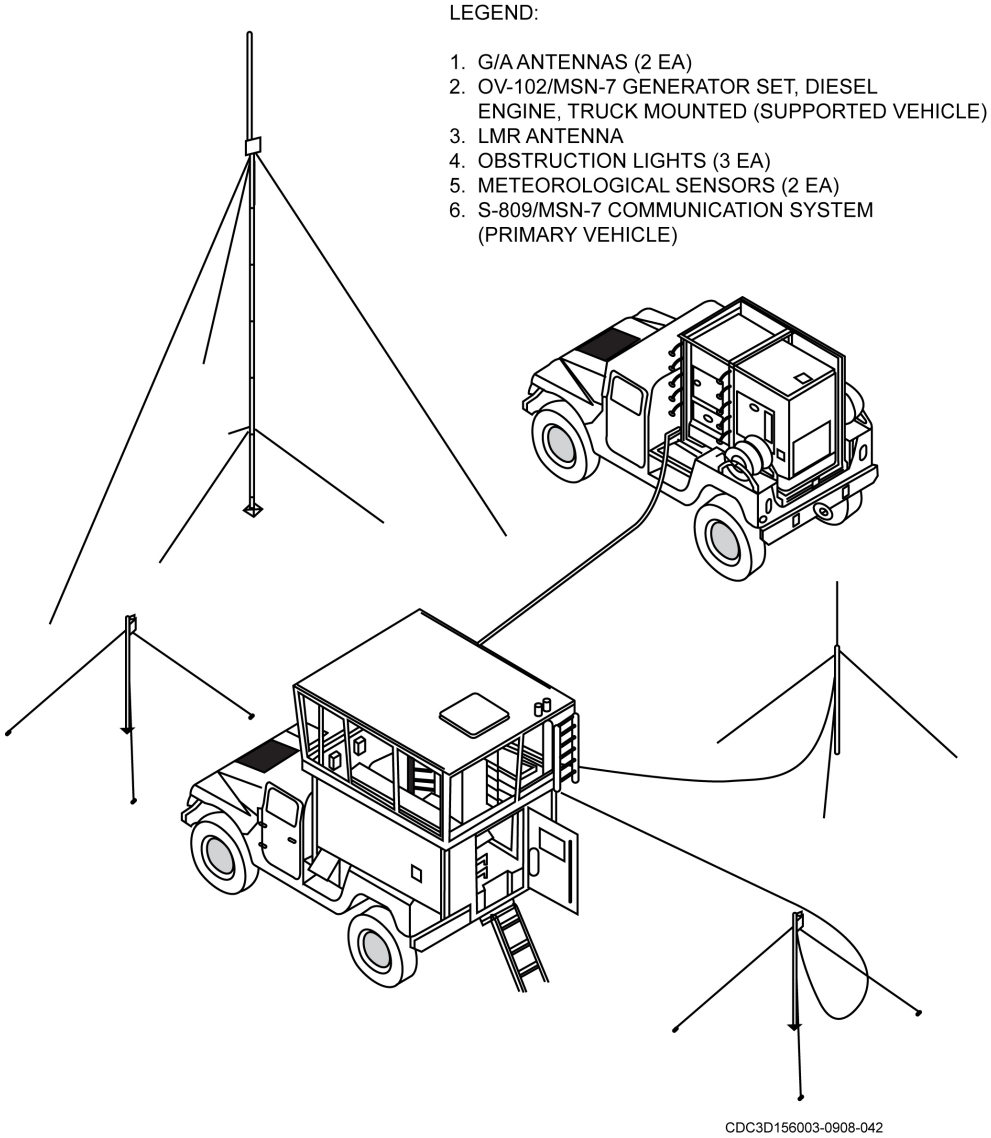

Figure 3–8. AN/MSN–7 normal deployment configuration.

Block diagram theory of operation

In order to get an understanding of how the AN/MSN–7 is interconnected and how each functional group relates to the others, let us take a closer look at each.

Power distribution functional group

Figure 3–9 shows the power distribution functional group. Components of the group are outlined in the table below.

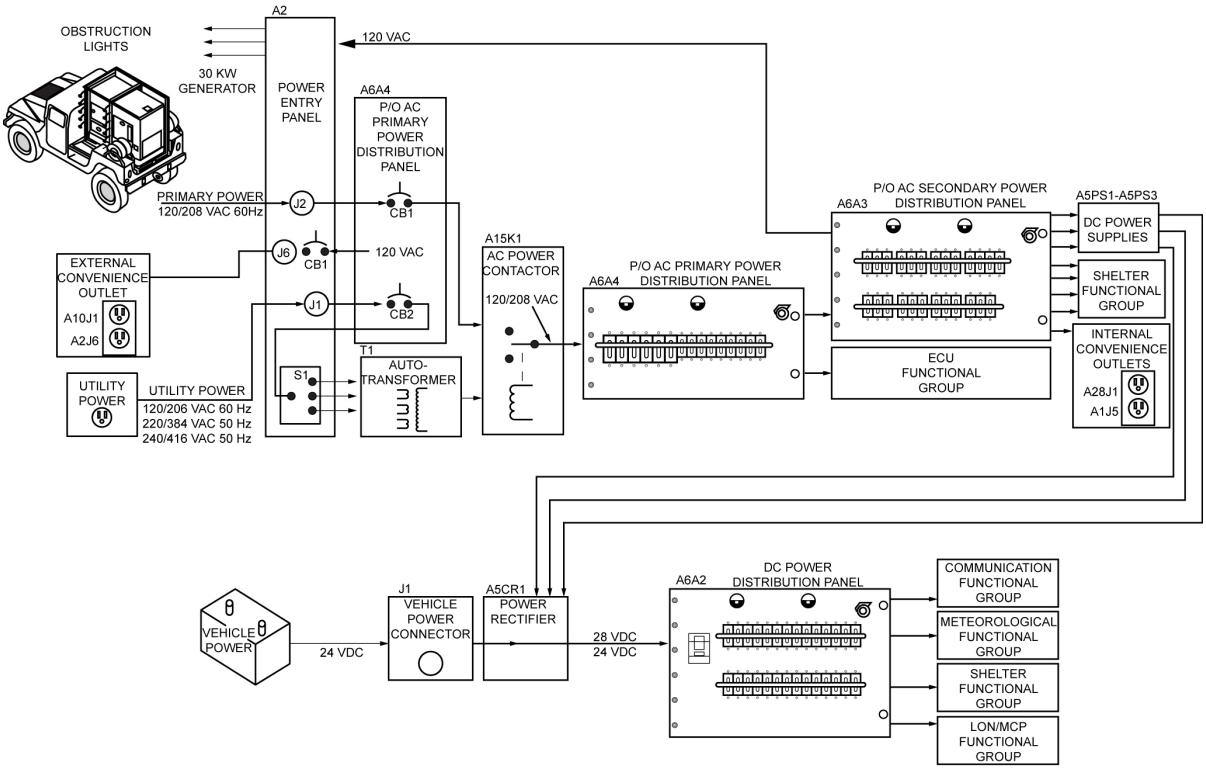

Figure 3–9. AN/MSN–7 power distribution functional group.

Power Distribution Functional Group Components	
Component	**Description**
Power entry panel A2	The power entry panel provides the means to connect generator and utility power. Primary power (120/208 VAC at [@] 60 Hz) is normally supplied by the generator on the support vehicle. Utility power (120/208 VAC @ 60 Hz, 220/384 VAC @ 50 Hz, or 240/416 VAC @ 50 Hz), when available, is connected to A2J1. Generator and utility power connects at the same time; however, use of utility power must be within acceptable limits. VOLTAGE SELECT switch A2S1 selects the appropriate utility power line voltage. A convenience outlet provides 120 VAC power on the panel. A2CB1 provides circuit protection for the convenience outlet. 120 VAC power is provided for the three obstruction lights. Obstruction lights, generator, and utility connectors are all equipped with lightning arrestors to protect the shelter in the event of a lightning strike.
AC primary power distribution panel A6A4	The AC primary power distribution panel provides switching and circuit protection for the primary and utility power connections. It also provides switching and circuit protection for the conditioned 120/208 VAC operating power to the rest of the shelter.

Power Distribution Functional Group Components	
Component	**Description**
Four element power filter FL1	The four-element power filter provides RF interference suppression on neutral and all three phases of utility power.
37.5 kilovolt-amp (kVA) auto-transformer	The auto-transformer converts 120/208 VAC @ 60 Hz, 220/384 VAC @ 50 Hz, or 240/ 416 VAC @ 50 Hz utility power to 120/208 VAC for use by the shelter. The proper tap of the transformer is selected by using the VOLTAGE SELECT switch on the power entry panel.
AC power contactor A15K1	The AC power contactor has an electrical/mechanical relay that automatically switches either generator power or utility power from the autotransformer, T1, to the AC primary power distribution panel A6A4 for use by the shelter. Use utility power within acceptable limits, if generator power and utility power are available. The power contactor also provides isolation of the unused path.
AC secondary power distribution panel A6A3	The AC secondary power distribution panel provides +28 VDC to most of the shelter to operate various equipment, internal convenience outlets, power to operate the window heaters, and power to operate the obstruction lights. During normal operation, the rectifier is biased so that +28 VDC from the DC power supplies power to most shelter equipment. If generator and utility power is lost, the rectifier biases' so that +24 VDC from the vehicle power connector J1 is used to power shelter equipment. Switchover occurs when the DC power supply outputs drop below +24 VDC; nominal switching time is 10 milliseconds. The output of the power rectifier goes to the DC power distribution panel A6A2.
DC power distribution panel A6A2	The DC power distribution panel allows +28/+24 VDC power from power rectifier A5CR1 to be switched through 200 ampere circuit breaker A6A2CB29 to the following locations: • DC power distribution lights. • Communication functional group to power the communications equipment. • G/A transceivers. • Voice recording system (VRS). • Communications access units (CAU). • Central control unit (CCU). • Antenna multicoupler. • LMRs. Power is also sent to the MFG to power both meteorological data processors (MDP). Power is sent to the shelter functional group to power ventilation, lift, and lighting equipment. All circuit breakers provide circuit protection for the smoke detector, ventilation fan, roof lift motor, interior red/white light fixtures, four console gooseneck lights, hazard annunciators (also DC power distribution panel lights), and the light gun power connectors. Power goes to the LON/MCP functional group to power the MCP, display, and nodes.

Meteorological functional group

Figure 3–10 shows the MFG. Refer to this figure as you read the group's description.

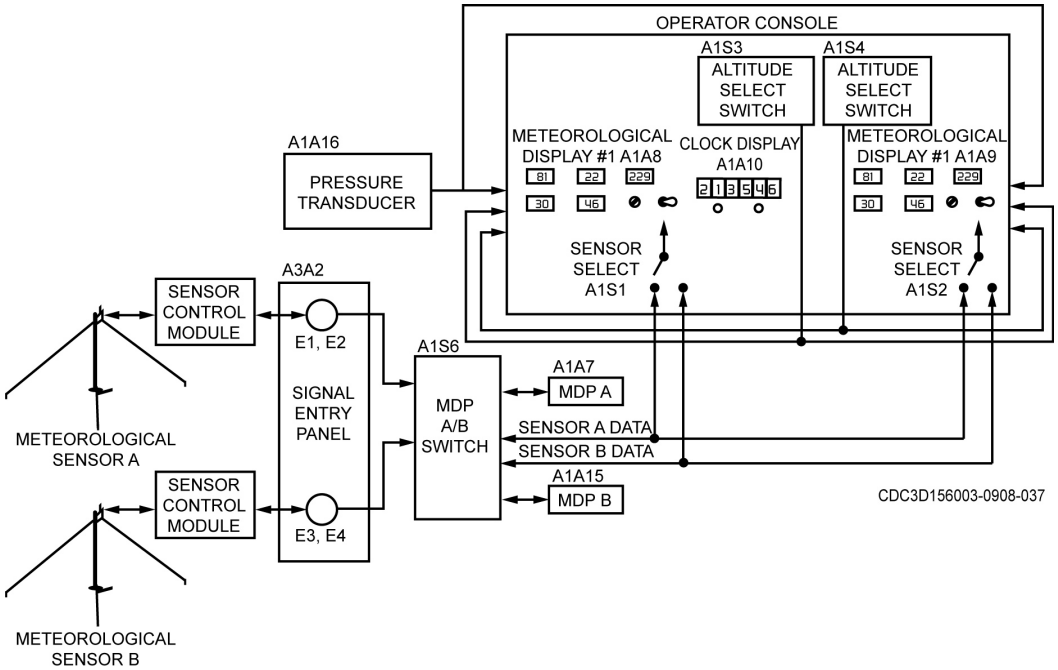

Figure 3–10. AN/MSN–7 meteorological functional group.

Two separate sensors provide current wind speed, wind direction, and temperature data. Each sensor assembly contains an anemometer, wind vane, temperature sensor, and electrical circuitry. The sensor control module provides power for the sensor. Output from the sensors goes to the sensor control module.

Meteorological Functional Group Modules	
Type	**Description**
Sensor control	The sensor control module (SCM) converts current wind speed, wind direction, and temperature data from the meteorological sensors to a data format for the interconnecting wire pair to the shelter. Using the interconnecting wire pair from the MDP provides power for the sensor control module and meteorological sensor. Output from the sensor control module goes to the MDP through the signal entry panel and MDP A/B switch.
Signal entry panel	The signal entry panel provides the capability to connect both meteorological sensors to the MDP A/B switch using two wire pairs.
Pressure transducer	The pressure transducer provides altitude data from a single pressure transducer located under the console. A tube connects the sensor to the outside of the shelter so that pressure generated on the inside of the shelter from the ECUs and ventilation fan does not affect the reading. Output from the pressure transducer goes to both meteorological displays.

The MDP processes data received from the meteorological sensors/sensor control module, and converts the data to current wind direction, wind speed, and temperature. The MDP A/B switch selects which MDP processes data, since only one MDP is used at a time. The +48 VDC for sensor

control module power generates on this module. Wind speed, wind direction, and temperature from each meteorological sensor routes to meteorological displays through the MDP A/B switch on the operator's console.

A meteorological display shows current wind speed, wind direction, wind gust, and temperature data from the selected MDPs. The position of the SENSOR SELECT switches determines which sensor data is processed and displayed. Wind speed, wind direction, and temperature are averaged over a 2-minute duration. Peak wind speed averages over a 10-minute duration and is used for calculating wind gusts. Altitude data taken from the pressure transducer inputs and processes on each meteorological display.

SENSOR SELECT switches determine which sensor's wind and temperature data from the MDP displays on each meteorological display. Position "A" uses data from sensor A and position "B" uses data from sensor B.

Controllers use the altitude select and altitude set switches. Two push-button switches select and set base altitude in the meteorological display.

A clock display module is a self-contained unit for displaying current time. Use the SET and SELECT push buttons to set the correct time.

Communications functional group

Figure 3–11 shows the communications functional group. Refer to the figure as we cover the equipment and signal flow of this group.

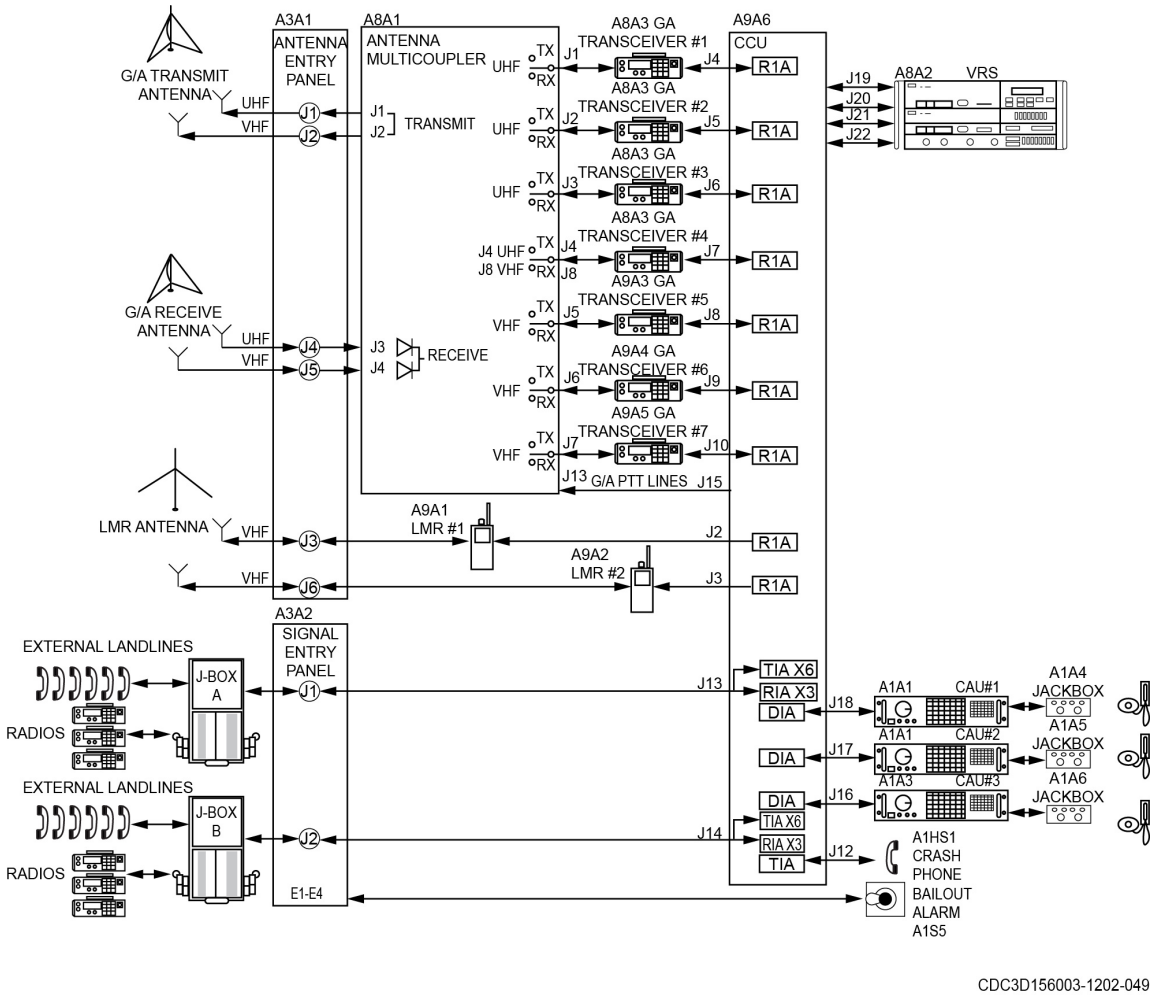

Figure 3–11. AN/MSN–7 communications functional group.

Antenna system

G/A antennas consist of four vertical omni-directional unity gain elements (packaged in two separate collinear antennas) and provide G/A transceiver communications. Each antenna consists of one VHF element (100 to 156 MHz), and one UHF element (225 to 400 MHz), capable of handling up to 50 watts (W) of RF power. Normally one antenna is used for transmit, and the other for receive. During single vehicle deployment, a single G/A antenna is used for both transmit and receive (with two operational G/A transceivers). Antennas connect to the antenna multicoupler through the antenna entry panel using RG–214 coaxial cable.

LMR antennas consist of two vertical omni-directional unity gain elements that provide G/G transceiver communications from a single collinear antenna. The antenna consists of two VHF elements (136 to 174 MHz), which are capable of handling up to 50W of RF power. Antennas connect directly to the LMRs through the antenna entry panel A3A1 using RG–214 coaxial cable.

An antenna entry panel provides the interface to connect all antenna elements to the shelter through six type-N connectors with built-in lightning arrestors. G/A antennas route to the antenna multicoupler for transmit (TX)/receive (RX) switching, transmit signal combining, and receive signal amplification and separation. LMR antennas route directly to the LMRs.

Signal entry panel

The signal entry panel provides the interface to connect twelve 2- or 4-wire landlines and six external transceivers to the shelter. Landlines may connect to manual- and dial-type central offices, including Private Automatic Branch Exchange/central office, FAA SS–1/SS–4, auto ring down, or universal. Six external transceivers are connected (using shielded cable) with transmit audio, receive audio, push-to-talk (PTT), and ground lines. Connection is through two 55-pin connectors with lightning arrestors. Two separate boxes connected to these two connectors provide the actual terminals for landline and transceiver connection. Landlines connect to individual telephone interface adapter (TIA) circuit card assemblies (CCA) in the CCU. Transceivers connect to individual radio interface adapter (RIA) CCAs in the CCU.

Multicoupler

An antenna multicoupler interfaces the seven G/A transceivers to the two G/A antennas. The antenna multicoupler can connect three UHF and four VHF, or four UHF and three VHF G/A transceivers to the two G/A antennas, without the need to connect or disconnect any of the antennas, RF cables, or antenna masts. A single RF cable from G/A transceiver #4 to the antenna multicoupler is the only item changed. Select antennas according to operational guidelines, to provide adequate antenna separation for each mission frequency plan. Use a single RG–214 RF cable to connect to each element.

The antenna multicoupler contains separate paths for receive and transmit. The CCU provides PTT lines that switch transceivers to the receive or transmit path. During transmit, RF from the keyed transceiver(s) is combined and switched to the proper element in the transmit G/A antenna for broadcast. During receive (normal position), RF from the receive G/A antenna is amplified approximately 4 decibels to improve signal-to-noise ratio, and then routed to the G/A transceivers.

Land mobile radios

LMRs consist of two separate 2-channel programmable VHF frequency modulated (FM) handheld transceivers with controllers and vehicle adapters to provide G/G communications for the shelter. Frequency range is 136 to 174 MHz, with maximum output power of 5W. Each transceiver connects directly to its LMR VHF antenna element through the antenna entry panel. Receive audio, transmit audio, and PTT lines connect through separate RIAs in the CCU. Each LMR is powered by its own 7.5 VDC rechargeable Ni-Cad battery pack. LMR controllers maintain each LMR's battery pack in a fully charged state using 12 VDC shelter power, and also contain the circuitry to complete the interface to the CCU. Even though each LMR powers from its battery pack, it will not function if

circuit breakers powering them are set to OFF. LMR vehicle adapters physically hold each LMR and interface them with the CCU.

Transceivers

Seven separate 8-channel programmable VHF/UHF amplitude modulated (AM) portable transceivers with power supplies provide G/A communications for the shelter. VHF frequency range is 116 to 149.975 MHz, and UHF frequency range is 225 to 399.975 MHz. Four G/A transceivers are set to UHF and three to VHF, or three to VHF and four to UHF at one time. Output power is 2W or 10W selectable. Each transceiver connects to the G/A antenna elements through the antenna multicoupler and antenna entry panel. Receive audio, transmit audio, and PTT lines are provided to/from a separate RIA CCA in the CCU. G/A transceiver power supplies provide 26.5 VDC power for each transceiver from +10 to +30 VDC shelter power.

Central control unit

A CCU provides overall control of shelter communications, interfaces the audio and control of the two LMRs, seven G/A transceivers, 12 landlines, six external radios, VRS A8A2, and three CAUs from one central location. The CCU chassis provides signal interface to all installed modules. Audio and control routed to/from the external equipment is provided by 22 connections. The RIA CCA provides audio and control interface to the seven G/A transceivers, two LMRs, and six external radios. The TIA CCA provides audio and control interface to the 12-landline connections and one for the crash phone. The module can configure for any one of 18 different telephone line types. A digital interface adapter (DIA) CCA provides audio and control interface to the three CAUs. Audio is routed to and from the CAUs with required signal isolation and amplification. Status includes signals for interpreting keyboard selections. Control includes signals for illumination of keyboard buttons. There is one module for each CAU position.

Communication access unit

The CAU combines radio and telephone control and switching specifically designed for use in a small, transportable, sheltered facility. One self-contained CAU allows each operator to access and control all available communication assets. The CAU provides these functions: audio with individual volume adjustment from a panel speaker, operator headphone jacks, and trainee headphone jacks. Control over the internal and external transceivers is accomplished by using the keyboard and connected handset/headset. Transmit and receive paths to individual transceivers are selected by pressing the corresponding key. Once the individual transceiver is selected, transceiver's key uses the PTT button on the handset or headset. Receive audio is output to the panel speaker or headphone jack-boxes. PTT inhibits all transceivers and landline-to-radio patches. Control over the landlines is accomplished using the keyboard. A 12-key dual tone multi-frequency (DTMF) keypad is used for dialing. Landline-to-radio patches, conferencing, redial, and hold capabilities can be used with any of the nine landlines. Status of all communication displays on the keyboard by illuminating each of the keys.

There is one jack-box for each operator. Each jack-box provides connection for up to two handsets or headsets. Audio control to the jack-box is by the CAU's volume controls. Microphone audio and PTT from the headphone route to the CAU.

A crash phone, when picked up, initiates up to three connections through a landline connector. All crash phone lines are configured as auto-ring down. Three indicators on the crash phone illuminate to indicate the individual connections made and remain on until the crash phone is replaced in the cradle. If you configure any crash phone lines as a TA–838 emulator, then all indicators are inoperable.

Voice recording system

The VRS, a 32-channel (only 30 channels are used), hard drive with dual DVD-RAM drive recorder/reproducer, is used to record all audio to and from three CAUs, 12 landlines, and 15 transceivers. Audio from the CCU A9A6 is in the form of four 8-channel connections. The VRS must be manually placed in the record or reproduce mode.

Environmental control unit functional group

Figure 3–12 shows the ECU functional group. The ECU control panel provides operator interface with each of the air conditioner units. The operator can select the mode (cool/heat/vent) and set the desired temperature using a thermostat. Status signals from the air conditioner units provide the operator with fault status and filter condition.

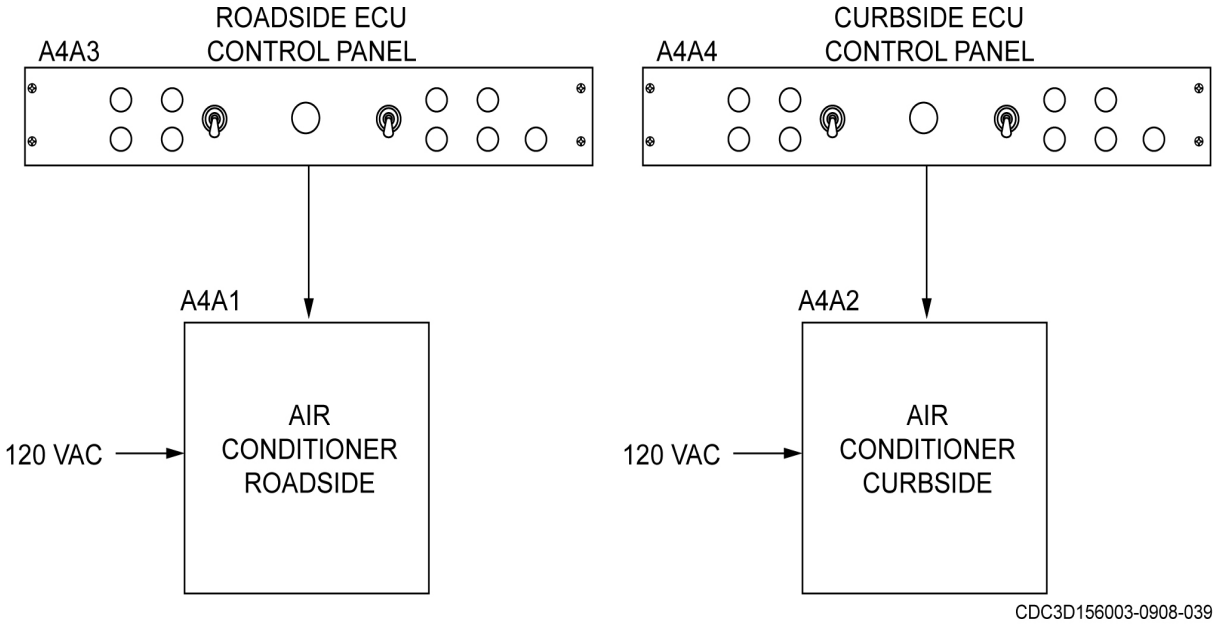

Figure 3–12. AN/MSN–7 ECU functional group.

Two self-contained units heat or cool the air in the shelter. Remember these units can only operate when the shelter is connected to generator or utility power. Control signals (heat/cool, on/off) are provided from the corresponding ECU control panel. Evaporator/condenser fan overload and unit fault status signals are also provided on the ECU control panel for display to the operator.

Local operating network/monitor control panel functional group

Figure 3–13 shows the LON/MCP functional group. The MCP monitors the status of the various functional groups in the AN/MSN–7.

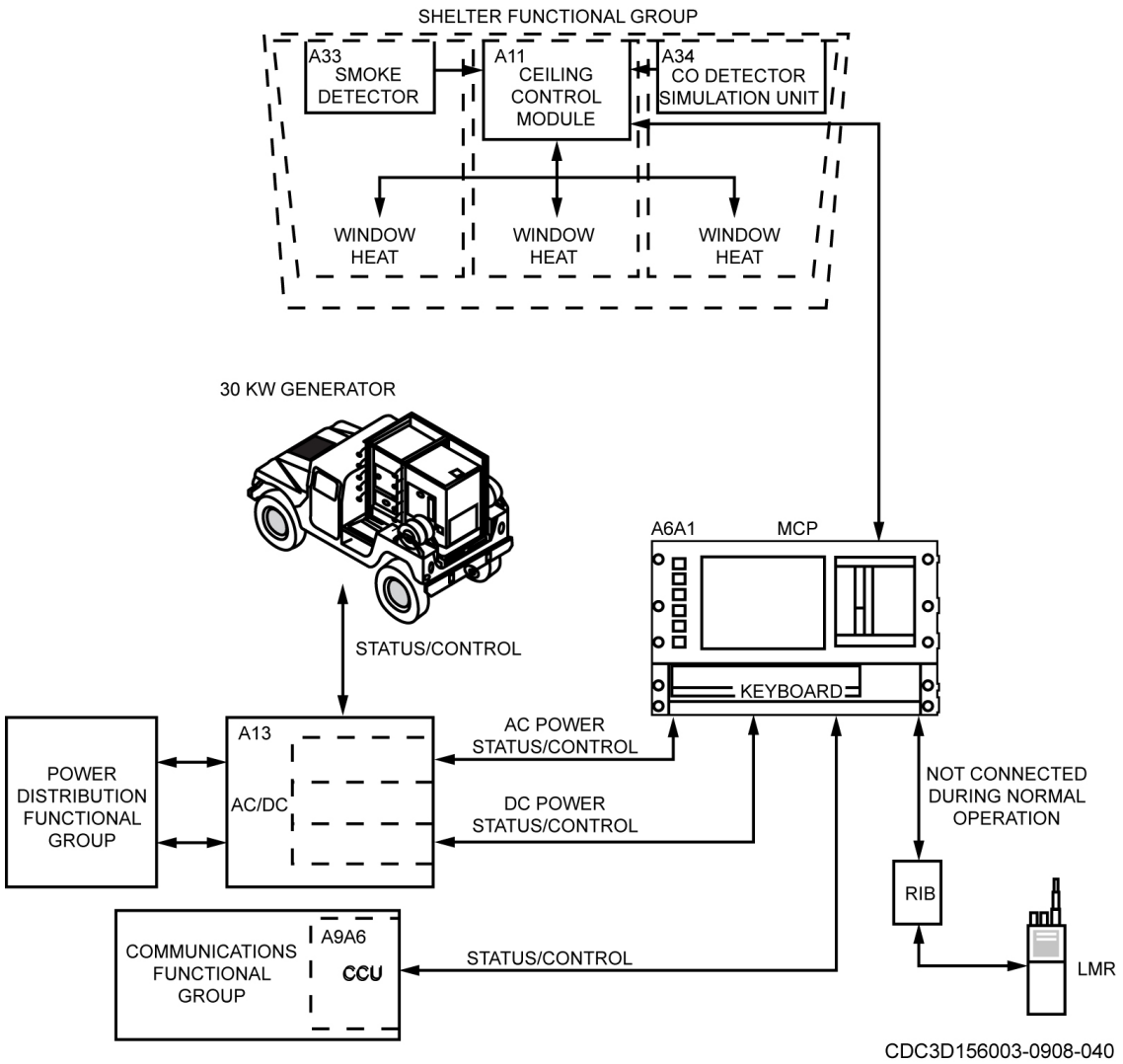

Figure 3–13. AN/MSN–7 LON/MCP functional group.

A MCP is a PC computer, complete with 101-type keyboard. It contains a central processing unit (CPU) CCA, monochrome electroluminescent (EL) display, super video graphic adapter (SVGA) controller CCA, serial LON talk adapter (SLTA) CCA, 4 megabyte (MB) personal computer memory card international association (PCMCIA) drive, and power supplies. Status displays on a 640 x 480 display. Six control buttons and the keyboard control an audible alarm and the MCP. The SLTA CCA provides the interface to the individual functional groups.

Power distribution functional group status is monitored during operation. The AC/DC LON module provides the MCP with power status. The generator, utility, and DC power are monitored for voltage. The MCP also monitors the generator fuel and status through the generator auxiliary sensor cable. If conditions warrant, the MCP can also trip individual circuit breakers on the DC power distribution panel through the AC/DC LON module.

The shelter functional group is monitored through window heat system and hazard sensors that connect to the MCP through the ceiling control module. A hazard monitor in the ceiling control module monitors the carbon monoxide (CO) detector simulation assembly and smoke detector status. If CO detector simulation assembly current is incorrect (greater or less than approximately 4 milliamps) or smoke is detected in the shelter, an audible alarm is sounded, and the display indicates the problem. The MCP monitors window heat through a window heat controller in the ceiling control

module A11. Heat mode (off, deice, or defog) and individual windows receiving heat are controlled and monitored by the MCP. The window heat system is only operational when the shelter is running on generator or utility power.

Communications functional group status is also monitored. The MCP is used to reprogram frequencies in the LMR, reprogram channel assignments in the CAU, and perform CCU/CAU diagnostics when taken off-line. A flash card loaded in the PCMCIA drive contains the necessary programs. A serial select switch on the MCP selects the device to program. The radio interface box must connect between the MCP and LMR when programming frequencies.

Shelter functional group

Figure 3–14 shows the shelter functional group. Refer to this figure as you follow through the description of the group's components.

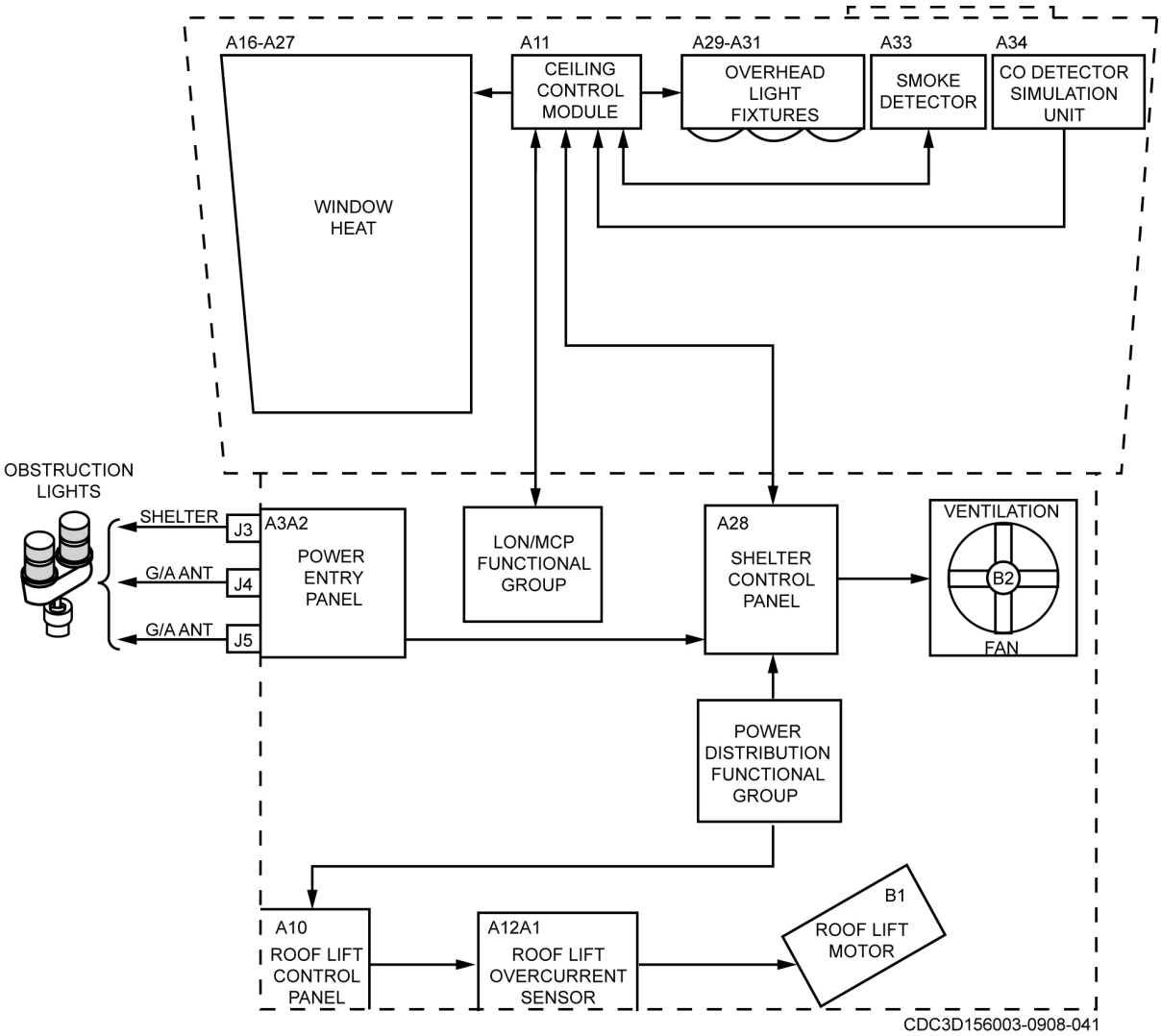

Figure 3–14. AN/MSN–7 shelter functional group.

A shelter control panel provides several controls and indicators. A dimmer control enables adjusting the white and red overhead lighting. The obstruction light indicator provides controllers with a visual on/off status of these exterior lights. The power override switch allows the operator to manually select generator or utility power. The panel contains CO and smoke alarm test switches. The switches allow the operator to test the CO alarm and all smoke alarm annunciators. A ventilation fan provides a

source of outside air in the event of an emergency (excess CO or smoke), or when generator/utility power is unavailable. A 28 VDC fan moves 2,000 cubic feet of air per minute. A vent fan speed rheostat on the shelter control panel controls fan speed. When in operation, ensure the ventilation fan intake port is on the curbside of the shelter and manually open the ventilation fan exhaust port on the door. This will assist with proper airflow through the shelter.

421. AN/TRN–48 Deployable Tactical Air Navigation System

The AN/TRN–48 is a deployable TACAN system which provides permanent bearing information to suitably equipped aircraft and, when interrogated, the range of the interrogator from the beacon. First, we will explain the system capabilities and limitations, followed by a brief overview of how the system works.

Capabilities and limitations

The following table states some of the most important system specifications. More information can be found in TO 31R4–2TRN48–1–WA–1, *Operation and Maintenance Instructions with Parts Lists - Mobile TACAN System, ANTRN-48.*

AN/TRN–48 Capabilities and Limitations	
System Parameter	**Description**
Frequency range	962 MHz to 1213 MHz
Channels	252 (126 X-coded and 126 Y-coded with 1 MHz spacing)
Range	Approximately 200 NM
Aircraft loading capacity	Up to 200 aircraft simultaneously
Modes	Normal mode: Transponder fully activated. Tactical or demand mode: The transponder will remain silent until interrogated with a proper interrogation signal. Power consumption is reduced to a minimum and squitter pulses are not radiated, reducing the chances of reception by hostile aircraft. Silent mode: The final high power amplifier stage (all amplifier modules) is deactivated, until reactivated by a proper interrogation signal. In this mode, squitter pulses are not radiated and neither is thermal noise from the power amplifier stage, further reducing the chances of reception by hostile aircraft.
Identification	1350 pulse pairs per second (ppps)
Pulse pair spacing	X-channel: 12 µs Y-channel: 30 µs
Peak power	Up to 5 kW
Reply delay	50 µs nominal (X-mode) 56 µs nominal (Y-mode)
Efficiency	At least 70% at all values of transponder loading, up to the loading of 200 aircraft
Operating temperature	+14° F to +131° F

Deployment options and transportability

System transportability and mobility features allow it to support a variety of deployment options and secondary missions. It is built on a trailer, capable of being towed on improved roads, transportable on C–130 aircraft, and capable of withstanding a combination of environmental conditions.

Theory of operation

An AN/TRN–48 TACAN system is a navigational aid that provides range and bearing information relative to the location of the beacon station (fig. 3–15). Distance information is obtained at the aircraft equipment by the delay measurement of reply pulses received from the beacon, relative to the interrogation pulses transmitted by the airborne equipment. Bearing information is obtained by measurement of the phase of components of the amplitude modulation envelope in the received pulses.

Figure 3–15. AN/TRN–48.

System signal flow

The antenna receives interrogation pulses from aircraft and feeds them to the beacon. At the beacon, received pulses are checked to ensure that they are valid interrogation pulses. After a fixed time delay, pulses are generated on a different frequency within the beacon and fed to the antenna for radiation.

The signal is radiated with different strength at different elevation angles, to provide optimum coverage. In particular, the signal radiated towards the ground is minimized to avoid destructive interference caused by signals reflected from the ground.

In azimuth, the amplitude of the signal is modulated by the antenna to provide azimuth-bearing information. The pattern in azimuth consists of three separate components:

- The first component has no variation with azimuth and is referred to as the omnidirectional component.
- The second component is a single-lobed pattern.
- The third component is a nine-lobed pattern.

A single-lobed pattern and nine-lobed pattern rotate clockwise at a rate of 900 revolutions per minute (RPM) or 15 revolutions per second (RPS). When an aircraft receives the signal in the coverage region of the antenna, the single-lobed pattern rotating at 15 RPS causes amplitude modulation at a rate of 15 Hz. Additionally, a nine-lobed pattern rotating at 15 RPS causes amplitude modulation at a rate of 135 Hz. The polar radiation pattern of the antenna is shown in figure 3–16. The entire pattern rotates at a rate of 900 RPM (15 RPS).

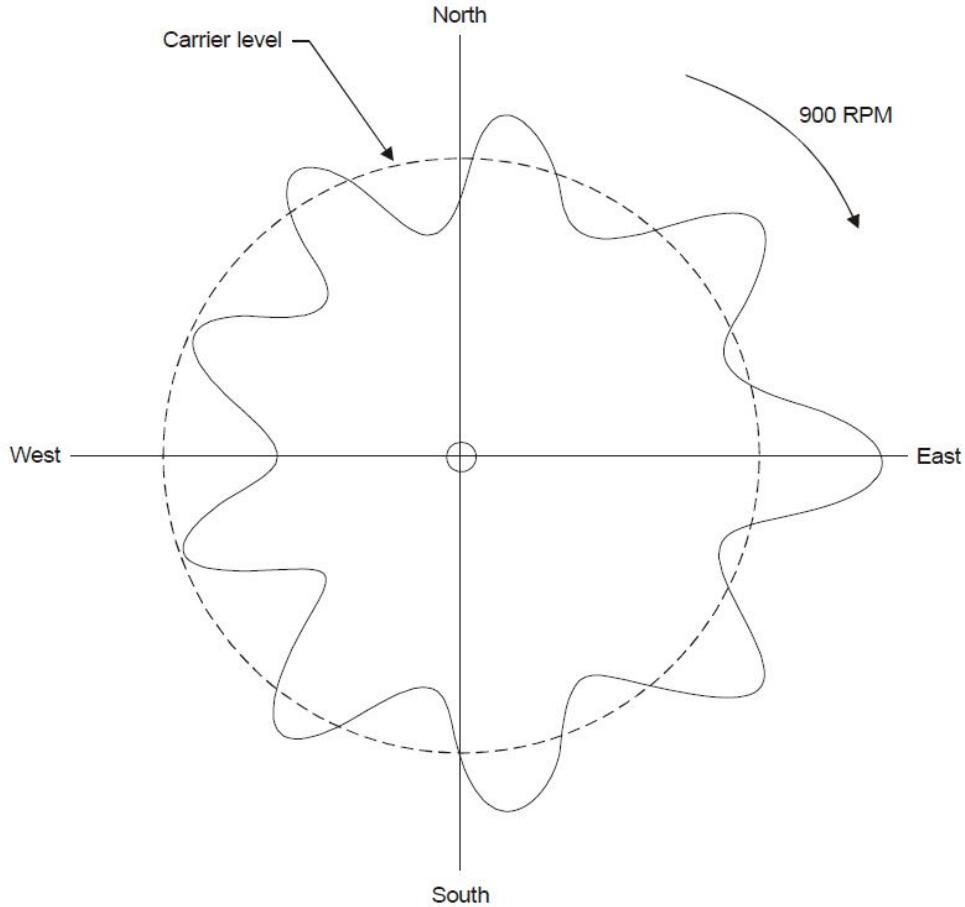

Figure 3–16. AN/TRN–48 polar radiation pattern.

The form of the signal received by an aircraft in the coverage region of the antenna is shown in figure 3–17. This figure shows the envelope of pulses with the 15 Hz (course bearing) and 135 Hz (fine bearing) modulation components produced by the antenna.

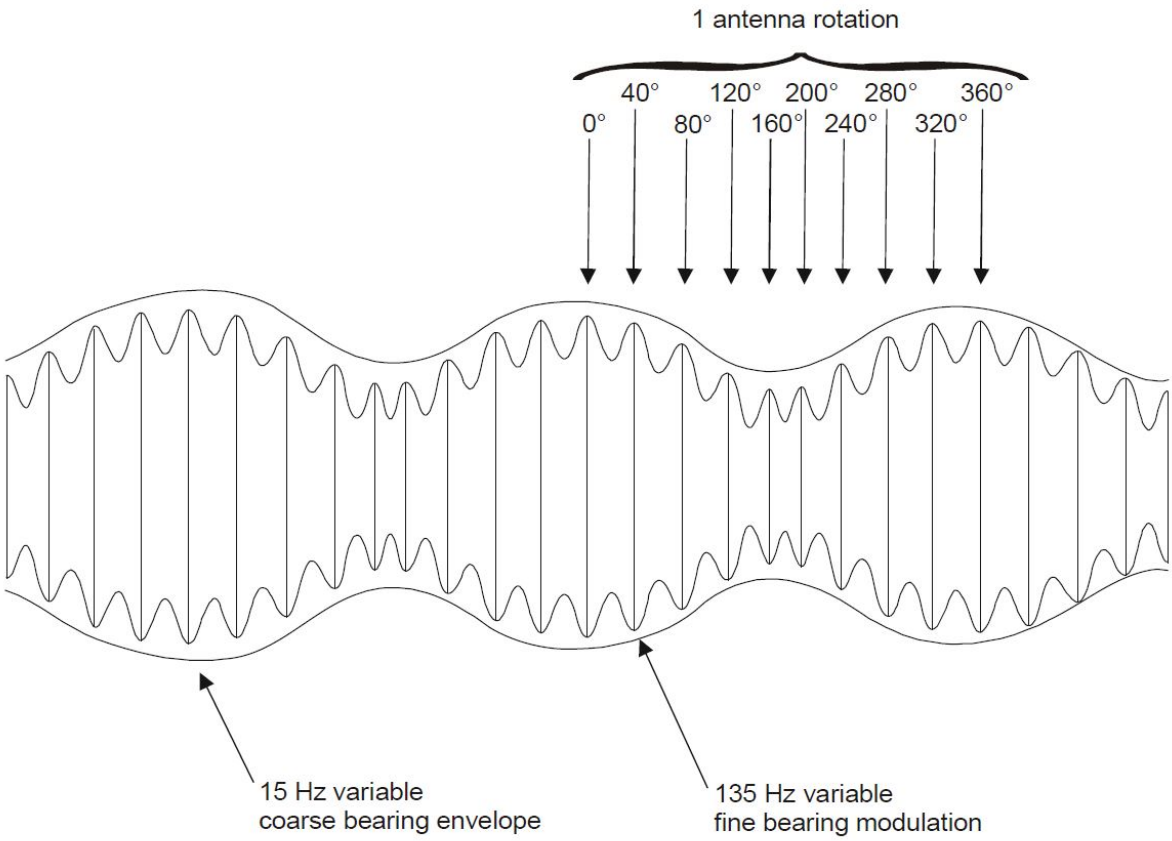

Figure 3–17. AN/TRN–48 modulation pattern.

Phases of the 15 Hz and 135 Hz modulation waves received at the aircraft depend on the bearing of the aircraft from the antenna. A peak of the modulation cycle occurs when the single-lobe, or one of the nine lobes of the polar pattern, is pointing towards the aircraft.

The beacon transmits two types of coded pulse sequences that provide the aircraft equipment a reference measurement for these two modulation components. These sequences are also called 'bursts':

- A north reference burst (NRB) is transmitted once every rotation of the pattern.
- An auxiliary reference burst (ARB) is transmitted once each cycle of the nine-lobe pattern.

These bursts are produced by the beacon in response to timing signals from the antenna. By measuring the phase of the 15 Hz modulation component relative to the NRB, the aircraft determines its bearing. The phase of the modulation component changes by 1 degree for each degree change in bearing angle. The timing of the NRB is arranged so that the phase of the modulation is equal to its bearing from magnetic north.

By measuring the phase of the 135 Hz modulation relative to the ARB, the bearing is also determined, but the phase changes by 360 degrees nine times for a complete rotation of the radiation pattern, or every 40 degrees of bearing.

This gives a measurement of bearing within each 40-degree sector of azimuth that has nine times the resolution of (and is approximately nine times more accurate than) that obtained from the 15 Hz signal. The ambiguity concerning which of the nine 40-degree sectors the aircraft is in is resolved by the bearing indication obtained from the 15 Hz signal. Thus, it can be seen that the distance and bearing information result from separate mechanisms.

The mechanism that provides distance information has identical signal and performance characteristics as the distance measuring equipment (DME) of military VHF omni-directional radio range tactical air navigation (VORTAC) and civil VOR/DME systems. Civil DME aircraft equipment is therefore able to get distance information from a TACAN beacon.

While distance information results from the aircraft interrogating the beacon, followed by a transmission from the beacon to the aircraft, the aircraft only has to receive signals transmitted by the beacon to obtain bearing information.

Identification signal

The beacon transmits a Morse code station ID signal at least once every 30 seconds. While the Morse character is being keyed, sets of 2 pulse pairs are transmitted at a rate of 1350 Hz. The spacing between pulse pairs is 100 µs. If the beacon is operating in X-mode, the spacing between the pulses in a pair is 12 µs. While operating in Y-mode, the spacing is 30 µs.

In the aircraft, this signal is presented as dots and dashes of a 1350 Hz audio tone. While this ID signal is being keyed, the beacon does not transmit any reply signals. However, the 'memory' provision in the aircraft equipment allows it to continue in track mode until reply pulses are again transmitted. Reply signals can be transmitted in the relatively long gaps between the dots and dashes of the slow Morse ID signal.

Self-Test Questions

After you complete these questions, you may check your answers at the end of the unit.

420. AN/MSN–7 Tactical Control Tower

1. State the range capabilities and limitations for the AN/MSN–7.

2. How many hours of continuous audio can the hard drive store?

3. What are the six functional groups of the AN/MSN–7?

4. The MFG of the AN/MSN–7 provides what four pieces of information to operators?

5. What functional group monitors and displays the current status of the other functional groups in the AN/MSN–7?

6. How fast can the AN/MSN–7 be driven on improved roads?

7. What power distribution functional group component provides the means to connect generator and utility power?

8. What electrical/mechanical relay automatically switches either generator power or utility power from the autotransformer?

9. A6A2 power is sent to the shelter functional group to power what three things?

10. How many wind sensors are in the MFG?

11. Explain what the MDP A/B switch does.

12. Describe what the antenna entry panel provides for the system.

13. How many G/A transceivers can connect to the multicoupler?

14. What is the purpose of the CCU?

15. How many channels are used in the VRS system of the AN/MSN–7?

16. What is used to reprogram frequencies of the LMRs?

17. What switch allows the operator to manually select either generator or utility power?

421. AN/TRN–48 Deployable Tactical Air Navigation System

1. What is the frequency range of the AN/TRN–48?

2. What is the peak power of the AN/TRN–48?

3. To provide optimum coverage, how is the AN/TRN–48 signal transmitted?

4. At what rate does the polar radiation pattern of the antenna rotate?

5. How does the system determine bearing?

6. How often is the station ID transmitted?

Answers to Self-Test Questions

418

1. Communications console and the central equipment.
2. Watch supervisor.
3. SOF.
4. In the central equipment rack.
5. TED.
6. SCT.
7. RS–232.
8. 16.
9. Provide central equipment interface for radio, operator, and telephone voice.
10. Selecting interphone circuits and intra-facility intercom channels that provide position-to-position communications with override capabilities for emergencies or critical communications.
11. ISDN.
12. CDB.

419

1. With the computer workstation.
2. Inform server.
3. At least 30 minutes.
4. 9,000 channel-hours of audio.
5. The GPS receiver acquires signals from three geosynchronous satellites and provides date and time information for synchronizing time over the DALR network.
6. Self-test.

420

1. Up to 15 miles line-of-sight to aircraft at 1,000 feet altitude.
2. Approximately 2500 hours of continuous audio at 2:1 compression methodology.
3. (1) Power distribution; (2) Meteorological; (3) Communications; (4) ECU; (5) LON/MCP; (6) Shelter.
4. (1) Current wind; (2) Temperature; (3) Altitude data; (4) Current time.
5. LON/MCP.
6. Up to 50 MPH.
7. Power entry panel A2.
8. AC power contactor A15K1.
9. Ventilation, lift, and lighting equipment.
10. Two.
11. Selects which MDP processes data, since only one MDP is used at a time.
12. An interface to connect all antenna elements to the shelter through six type-N connectors with built in lightning arrestors.

13. Seven.
14. Provides overall control of shelter communications, interfaces the audio and control of the two LMRs, seven G/A transceivers, 12 landlines, six external radios, VRS A8A2, and three CAUs from one central location.
15. 30.
16. MCP.
17. Power override switch.

421

1. 962 MHz to 1213 MHz.
2. Up to 5 kW.
3. The signal is radiated with different strength at different elevation angles.
4. 900 RPM (15 RPS).
5. By measuring the phase of the 135 Hz modulation relative to the ARB.
6. At least once every 30 seconds.

Complete the unit review exercises before going to the next unit.

Unit Review Exercises

Note to Student: Consider all choices carefully, select the *best* answer to each question, and *circle* the corresponding letter. When you have completed all unit review exercises, transfer your answers to the Field-Scoring Answer Sheet.

Do not return your answer sheet to AFCDA.

71. (418) What Enhanced Terminal Voice Switch (ETVS) tower console position monitors radio and intercom transmissions and corrects any controller mistakes?
    a. Local.
    b. Ground.
    c. Coordinator.
    d. Watch supervisor.

72. (418) What Enhanced Terminal Voice Switch (ETVS) tower console position is usually manned by a pilot, rather than an air traffic controller?
    a. Supervisor of flying (SOF).
    b. Watch Supervisor.
    c. Coordinator.
    d. Flight data.

73. (418) Instead of pushing mechanical buttons on the Enhanced Terminal Voice Switch (ETVS), operators use a
    a. touch entry display (TED).
    b. disk operating system (DOS).
    c. timing multiplexer unit (TMU).
    d. supervisor configuration terminal (SCT).

74. (418) Which is *not* a capability of the Enhanced Terminal Voice Switch (ETVS) supervisor configuration terminal (SCT)?
    a. Position reconfiguration.
    b. Change system passwords.
    c. Checks system faults every 45 seconds.
    d. Provides ability to modify global and local maps.

75. (418) Which is a true statement about the Enhanced Terminal Voice Switch (ETVS) radio distribution panel?
    a. It records all radio traffic.
    b. It is *not* a line replaceable unit.
    c. It interfaces all ETVS communications.
    d. It connects to the voice data bus (VDB) by fiber optic cabling.

76. (418) What is the maximum number of telephone cards that a single Enhanced Terminal Voice Switch (ETVS) telephone card cage can hold?
    a. 14.
    b. 16.
    c. 18.
    d. 20.

77. (418) What Enhanced Terminal Voice Switch (ETVS) components provide central equipment interface for radio, operator, and telephone voice communications?
    a. Indirect access (IA) controls.
    b. Direct access (DA) controls.
    c. Processor cards.
    d. Fiber cables.

78. (418) What links the Enhanced Terminal Voice Switch (ETVS) positions to the central equipment?
    a. Fiber cables.
    b. Direct access (DA) controls.
    c. Indirect access (IA) controls.
    d. Integrated services digital network (ISDN).

79. (418) The supervisor configuration terminal (SCT) and Gateway SCT reside on a(n)
    a. integrated services digital network (ISDN).
    b. selective signaling data bus.
    c. local area network (LAN).
    d. voice data bus (VDB).

80. (419) What is the maximum number of channels that a digital audio legal recorder one (DALR1) can record?
    a. 48.
    b. 96.
    c. 144.
    d. 288.

81. (419) What component is the main physical user interface for the digital audio legal recorder (DALR) system?
    a. Liquid crystal display (LCD) drawer.
    b. Analog line interface (ALI).
    c. Recorder/logger.
    d. Inform server.

82. (419) How many minutes does the digital audio legal recorder (DALR) uninterruptible power supply (UPS) provide power in the event of site power loss?
    a. 10.
    b. 15.
    c. 20.
    d. 30.

83. (419) Larger digital audio legal recorder two (DALR2) systems have a channel-hour capacity of
    a. 9,000.
    b. 15,000.
    c. 45,000.
    d. 65,000.

84. (419) In the digital audio legal recorder (DALR) global positioning system (GPS) receiver, how many satellites should be acquired for an accurate time stamp?
    a. 2.
    b. 3.
    c. 6.
    d. 12.

85. (420) What is the range of the AN/MSN–7 Tactical Control Tower system?
    a. Up to 15 miles line-of-sight to aircraft at 1,000 feet altitude.
    b. Up to 30 miles line-of-sight to aircraft at 2,000 feet altitude.
    c. A minimum of 15 miles line-of-sight to aircraft at 1,000 feet altitude.
    d. A minimum of 30 miles line-of-sight to aircraft at 2,000 feet altitude.

86. (420) How many light guns are in the AN/MSN–7 Tactical Control Tower?
    a. 1.
    b. 2.
    c. 3.
    d. 4.

87. (420) What AN/MSN–7 Tactical Control Tower functional group displays the current status of the system's other functional groups?
    a. Meteorological.
    b. Communications.
    c. Power distribution.
    d. Local operating network/monitor control panel (LON/MCP).

88. (420) Up to how many miles per hour (mph) can the AN/MSN–7 Tactical Control Tower be driven on improved roads?
    a. 35.
    b. 40.
    c. 50.
    d. 55.

89. (420) AN/MSN–7 Tactical Control Tower primary power is normally supplied by
    a. utility power.
    b. a generator on the support vehicle.
    c. four (4) 37.5 kilovolt-amp (kVA) solar panels.
    d. the direct current (DC) power distribution panel.

90. (420) The AN/MSN–7 Tactical Control Tower direct current (DC) power distribution panel sends power to what functional group to power ventilation, lift, and lighting equipment?
    a. Shelter.
    b. Meteorological.
    c. Power distribution.
    d. Environmental control unit (ECU).

91. (420) What AN/MSN–7 Tactical Control Tower component provides the capability to connect both meteorological sensors to the meteorological data processor (MDP) A/B switch?
    a. Sensor control module (SCM).
    b. Central control unit (CCU).
    c. Pressure transducer.
    d. Signal entry panel.

92. (420) How many type-N connectors does the AN/MSN–7 Tactical Control Tower antenna entry panel provide for connection of all antenna elements to the shelter?
    a. 5.
    b. 6.
    c. 7.
    d. 9.

93. (420) How many ground-to-air transceivers can connect to the AN/MSN–7 Tactical Control Tower multicoupler?
    a. 5.
    b. 6.
    c. 7.
    d. 9.

94. (420) What is the selectable output power level, in watts (W), for the AN/MSN–7 Tactical Control Tower transceivers?
    a. 2 and 10.
    b. 5 and 20.
    c. 10 and 20.
    d. 10 and 25.

95. (420) How many channels are *actually* used in the AN/MSN–7 Tactical Control Tower voice recording system (VRS)?
    a. 30.
    b. 32.
    c. 34.
    d. 36.

96. (420) What shelter function group component of the AN/MSN–7 Tactical Control Tower allows the operator to manually select generator or utility power?
    a. Commercial/generator switch.
    b. Generator to utility switch.
    c. Power transfer control.
    d. Power override switch.

97. (421) What is the approximate nautical mile (nm) range of the AN/TRN–48 Deployable Tactical Air Navigation System?
    a. 100.
    b. 150.
    c. 200.
    d. 250.

98. (421) What is the peak power, in watts (W), of the AN/TRN–48 Deployable Tactical Air Navigation System?
    a. 3,000.
    b. 5,000.
    c. 7,000.
    d. 7,500.

99. (421) Which is *not* a component of the AN/TRN–48 Deployable Tactical Air Navigation System azimuth pattern?
    a. Nine-lobe pattern.
    b. Single-lobed pattern.
    c. Omnidirectional component.
    d. North modulation component.

100. (421) How often does the AN/TRN–48 Deployable Tactical Air Navigation System beacon transmit the Morse code station identification (ID)?
    a. At least once every 30 seconds.
    b. At least once every minute.
    c. Every 15 seconds.
    d. Every 20 seconds.

Glossary of Abbreviations and Acronyms

@	at
°	degree
µs	microsecond
Ω	ohm
AC	alternating current
AFSC	Air Force specialty code
ALI	analog line interface
AM	amplitude modulation
AME	antenna mounted electronics
ANSI	American National Standards Institute
AOS	Active Optical Systems
AP	anomalous propagation
ARB	auxiliary reference burst
ARU	alarm relay unit
ASU	automatic signaling unit
AT/RH	air temperature and relative humidity
ATC	air traffic control
AWA	Airport Weather Advisor
AWIPS	Advanced Weather Interactive Processing System
BITE	built-in test equipment
C	Celsius
CAT	category
CAU	communications access unit
CCA	circuit card assembly
CCS	configuration and control subsystem
CCU	central control unit
CD	compact disc
cd/m^2	candelas per square meter
CDB	control data bus
C-E	communications - electronics
cm	centimeter
CO	carbon monoxide
CODEC	coder/decoder
CPGS	common point ground system

CPS	central processing station
CPU	central processing unit
CSU	channel service unit
DA	direct access
DALR	digital audio legal recorder
dB	decibel
dBm	decibels referenced to a milliwatt standard
DC	direct current
DCP	data collection platform
DDS	digital data storage
DIA	digital interface adapter
DME	distance measuring equipment
DOC	Department of Commerce
DOD	Department of Defense
DOS	disk operating system
DOT	Department of Transportation
DRU	digital recorder unit
DTMF	dual tone multi-frequency
DVD	digital video disc
E and M	ear and mouth
E&M	entertainment and multimedia
ECU	environmental control unit
EL	electroluminescent
EMP	electromagnetic pulse
ESD	electrostatic discharge
ESDS	electrostatic discharge sensitive
ETIMS	Enhanced Technical Information Management System
ETVS	Enhanced Terminal Voice Switch
F	Fahrenheit
FAA	Federal Aviation Administration
FDCU	field data collection unit
FM	frequency modulation
FMH	federal meteorological handbook
FXO	foreign exchange office
G/A	ground-to-air
G/G	ground-to-ground

GIG	Global Information Grid
GPS	global positioning system
GUI	graphical user interface
HDL	high density logger
Hg	Mercury
HMMWV-HV	high mobility multi-purpose wheeled vehicle-heavy variant
hPa	hectopascal
HVAC	heating, ventilation, and air conditioning
Hz	Hertz
IA	indirect access
ID	identification
IEEE	Institute of Electrical and Electronics Engineers
IF	intermediate frequency
in/hr	inches an hour
IP	Internet protocol
ISDN	integrated services digital network
ISO	International Organization for Standardization
ITWS	Integrated Terminal Weather System
JET	Joint Environment Toolkit
kA	kiloamperes
kHz	kilohertz
km	kilometer
kVa	kilovolt-amp
kW	kilowatt
LAN	local area network
LB	L-bend
LCD	liquid crystal display
LED	light emitting diode
LMR	land mobile radio
LON	local operating network
LRU	line replaceable unit
m	meter
M/S	main/standby
MB	megabyte
Mbps	megabits per second
MCP	monitor control panel

MDP	meteorological data processor
MFG	meteorological functional group
MHz	megahertz
MLOS	microwave line-of-sight
mph	miles per hour
MSCF	master system control function
MUX	multiplexer
mΩ	milliohm
NEC	National Electric Code
NEXRAD	Next Generation Radar
NIPR	non-classified Internet protocol router
nm	nautical mile
NRB	north reference burst
NSTISSAM	National Security Telecommunications and Information Systems Security Advisory Memorandum
NTP	network time protocol
NWS	National Weather Service
OL	overload
OPUP	Open Principal User Processor
OSD	On-Site Display
OWS	operational weather squadron
PAPI	Precision Approach Path Indicator
PBX	public branch exchange; private branch exchange
PCA	processor/communications assembly
PCI	peripheral component interconnect
PCMCIA	personal computer memory card international association
PDR	Portable Doppler Radar
ppps	pulse pairs per second
PTT	push-to-talk
PVC	polyvinyl chloride
R/T	receiver/transmitter
RAM	random access memory
RAPCON	radar approach control
RDA	radar data acquisition
RF	radio frequency
RHLIM	runway heading and light intensity monitor

RIA	radio interface adaptor
RPG	radar product generator
RPGPCA	radar product generator processor/communications assembly
RPM	revolutions per minute
RPS	revolutions per second
RTD	resistance temperature detector
RVR	runway visual range
RX	receive
SCA	sensor collection appliance
SCM	sensor control module
SCT	supervisor configuration terminal
SIPTO	standard installation practices technical order
SLTA	serial local operating network talk adapter
SM	statute mile
SNMPc	Simple Network Management Protocol Management Console
SNTP	Simple Network Time Protocol
SOF	supervisor of flying
SS	selective signaling
ST	serial telecommunications
SVGA	super video graphic adapter
T1	transmission system 1
TACAN	tactical air navigation
TDM	time division multiplexer
TED	touch entry display
TEMPEST	telecommunications electronics material protected from emanating spurious transmissions
TIA	telephone interface adapter
TMU/CMU	timing multiplexer/cluster multiplexer unit
TO	technical order
TX	transmit
UHF	ultrahigh frequency
UL	Underwriters Laboratories
UPS	uninterruptable power supply
USB	universal serial bus
VAC	volts alternating current
VDB	voice data bus

VDC	volts direct current
VHF	very high frequency
VORTAC	very high frequency omni-directional radio range tactical air navigation
VRS	voice recording system
W	watt
WARP	Weather and Radar Processing
WBC	wideband communications
WFO	weather forecast office
WMO	World Meteorological Organization

Student Notes

AFSC 1C853
1C853B 03 1909
Edit Code 01