1C853A 04 S01 1906

CDC 1C853A

Radar, Airfield & Weather Systems Journeyman

Supplementary Material for Volume 4

Foldouts 1–3

Air Force Career Development Academy
The Air University
Air Education and Training Command

Table of Foldouts

Foldout 1. PAR shelter block diagram.

Foldout 2. AN/TPS–75 system interconnection.

Foldout 3. AN/UPX–37 block diagram.

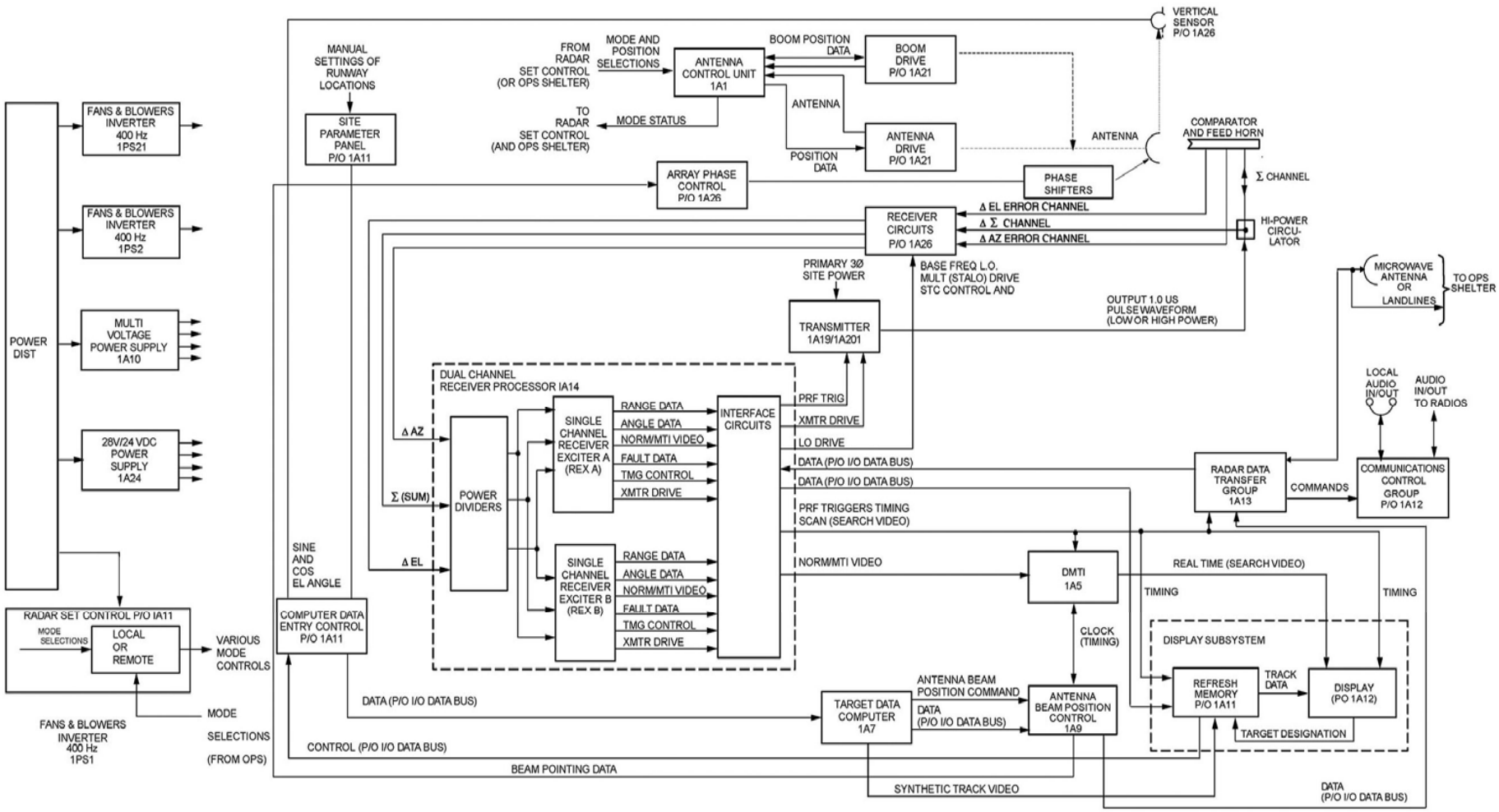

Foldout 1. PAR shelter block diagram.

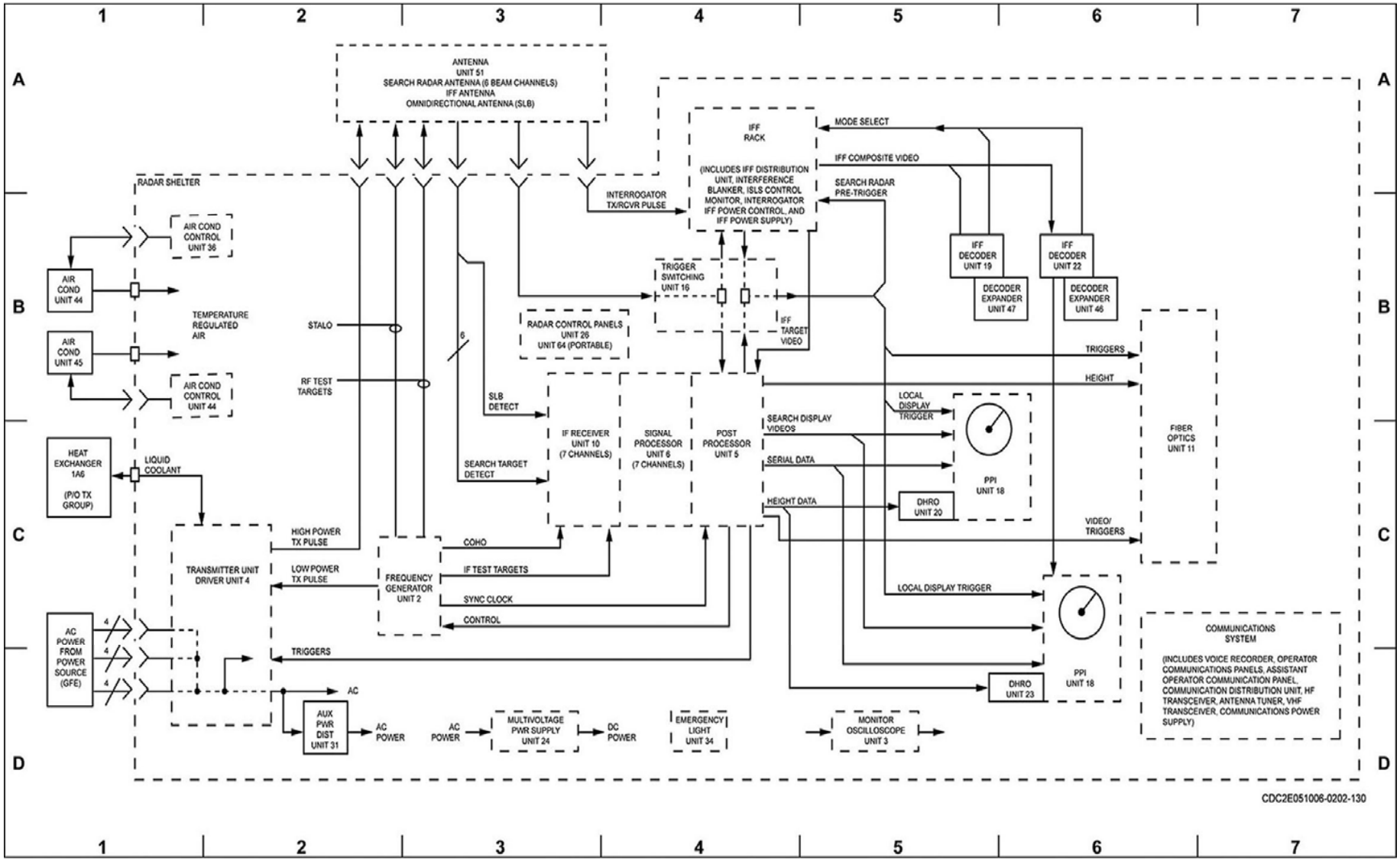

Foldout 2. AN/TPS–75 system interconnection.

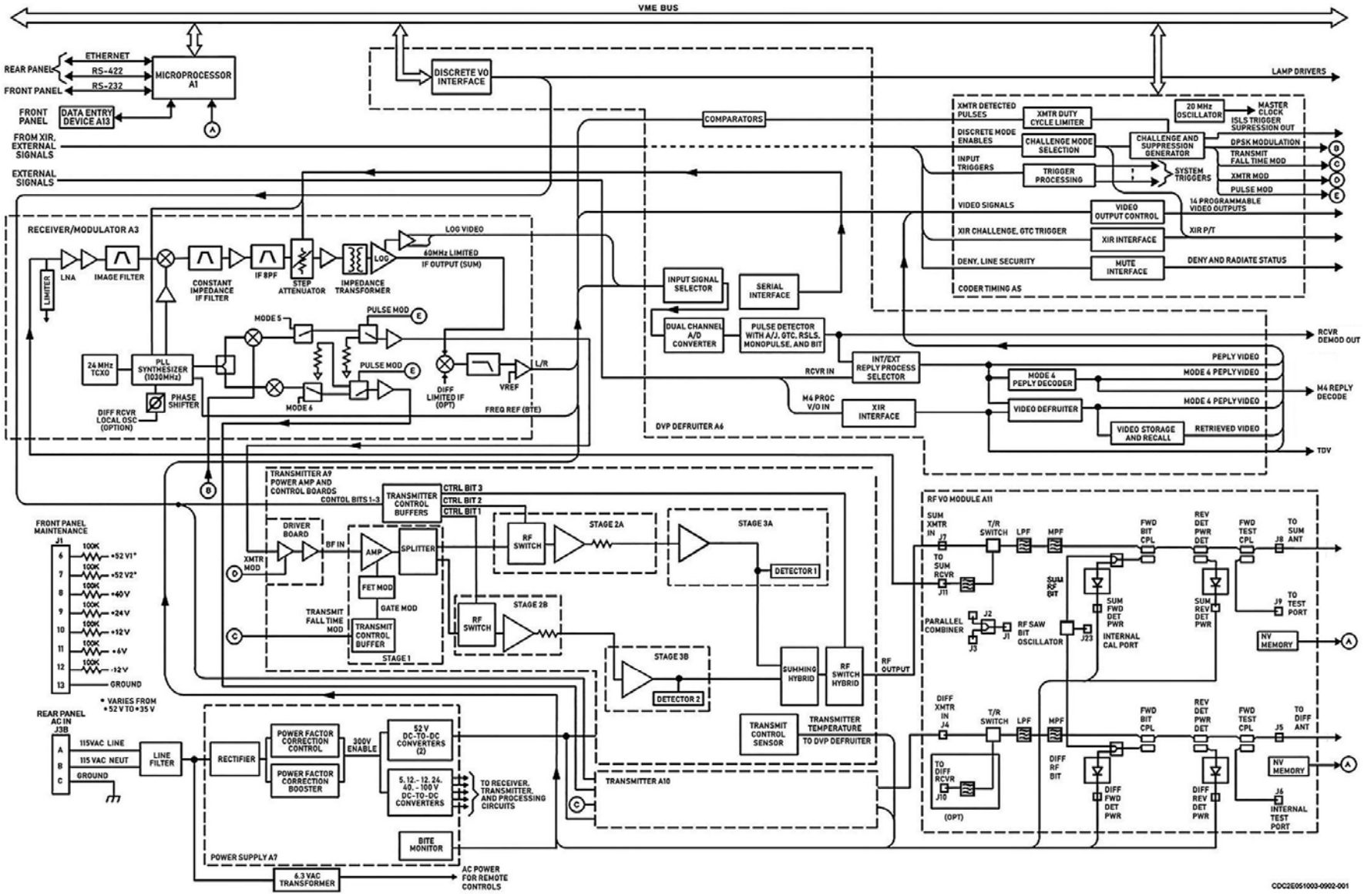

Foldout 3. AN/UPX–37 block diagram.

Student Notes

AFSC 1C853
1C853A 04 S01 1906
Edit Code 01