CDC 1C853A

Radar, Airfield & Weather Systems Journeyman

Volume 4. Deployable Radar, Airfield & Weather Systems

Air Force Career Development Academy
Air University
Air Education and Training Command

1C853A 04 1907, Edit Code 01
AFSC 1C853

Author: MSgt Michael P. Webb
MSgt Troy A. Partin
334th Training Squadron
Radar, Airfield & Weather Systems School (AETC)
334 TRS/ULCA
610 Hangar Road, Building 4214
Keesler Air Force Base, Mississippi 39534-2030
DSN: 597-3118
E-mail address: 334TRS.ULCA.1C8CDCWriter@us.af.mil

Instructional Systems Specialist: Hozell Odom III

Editor: Maxine Baldwin

Air Force Career Development Academy (AFCDA)
Air University (AETC)
Maxwell AFB-Gunter Annex, Alabama

Material in this volume is reviewed annually for technical accuracy, adequacy, and currency. For Weighted Airman Promotion System (WAPS) Specialty Knowledge Test (SKT) purposes, the examinee should check the *Enlisted Promotions References and Requirements Catalog* to determine the correct references to study.

This fourth volume of career development course (CDC) 1C853A is divided into two units that explain expeditionary concepts and deployable radar systems in the Radar, Airfield & Weather Systems (RAWS) career field.

Unit 1 starts by identifying expeditionary concepts and deployable missions of the career field. It explains the air and space expeditionary force (AEF) construct and how the career field supports its needs. Next, components of the deployable mission are discussed in relation to the different equipment and taskings that a technician in the career field may support. Lastly, unmanned aerial vehicles and their impact in the deployed environment are discussed.

Unit 2 explains several types of deployable radar equipment that the career field maintains. It begins with the AN/MPN-14K Landing Control Central, describing operating characteristics and the functional operation. Next, the AN/TPN-19 Landing Control Central is explained, to include the AN/TPN-25 and AN/TPN-25 that make up the system. Afterwards, the AN/TPX-42A Secondary Surveillance Radar is covered to include an overview of identification, friend or foe/selective identification feature (IFF/SIF). Lastly, the AN/TPS-75 is discussed along with the AN/UPX-37 interrogator set.

A glossary is included for your use.

Code numbers on figures are for preparing agency identification only.

The use of a name of any specific manufacturer, commercial product, commodity, or service in this publication does not imply endorsement by the Air Force.

To get a response to your questions concerning subject matter in this course, or to point out technical errors in the text, unit review exercises, or course examination, call or write the author using the contact information provided in this volume.

NOTE: Do not use Air Force Instruction (AFI) 38-402, *Airmen Powered by Innovation and Suggestion Program,* to submit corrections for printing or typographical errors. For Air National Guard (ANG) members, do not use Air National Guard Instruction (ANGI) 38-401, *Suggestion Program.*

If you have questions that your supervisor, training manager, or education/training office cannot answer regarding course enrollment, course material, or administrative issues, please contact Air University Educational Support Services at http://www.aueducationsupport.com. Be sure your request includes your name, the last four digits of your social security number, address, and course/volume number.

For Guard and Reserve personnel, this volume is valued at 12 hours and 3 points.

NOTE:

In this volume, the subject matter is divided into self-contained units. A unit menu begins each unit, identifying the lesson headings and numbers. After reading the unit menu page and unit introduction, study the section, answer the self-test questions, and compare your answers with those given at the end of the unit. Then complete the unit review exercises.

Page

Unit 1. Expeditionary Concepts and Deployable Missions 1-1

1–1. Air and Space Expeditionary Force Construct 1-1

1–2. Deployable Missions 1-7

Unit 2. Deployable Radar Equipment 2-1

2–1. AN/MPN–14K Landing Control Central 2-1

2–2. AN/TPN–19 Landing Control Central 2-10

2–3. AN/TPX–42A Secondary Surveillance Radar 2-32

2–4. AN/TPS–75 Aircraft Control and Warning System 2-37

Glossary G–1

Unit 1. Expeditionary Concepts and Deployable Missions

1–1. Air and Space Expeditionary Force Construct 1–1
601. Air and space expeditionary force organization 1–1
602. Unit type code management documents 1–3
1–2. Deployable Missions 1–7
603. General components of the deployable mission 1–7
604. Unmanned aerial vehicles 1–11

THE LAST DECADE of the twentieth century brought many changes to the way the Air Force (AF) accomplishes its mission. The Cold War brought about a robust infrastructure of numerous forward installations, a large manning structure, and a national policy of containment geared toward stopping threats to the United States (US) and its allies. As totalitarian governments dissolved, the need for the containment policy and related missions diminished. Although the Cold War is over, there are continual threats to national security. You can see these threats almost daily, especially in the Middle East. The continual need to advance national policy and to protect national and global interests stretches scarce resources, resulting in staffing shortages, and overseas base reductions or closures. These changes mean that there will be more deployment roles from stateside locations and fewer "permanent" bases elsewhere. The AF will continue to have a critical role in deployments. This unit will focus on two specific roles—the air and space expeditionary force (AEF) and deployable missions.

1–1. Air and Space Expeditionary Force Construct

AEF is the method the AF uses to fulfill joint global force management (GFM) processes. From AEF blocks, to rotational Airmen and institutional forces, force providers must understand all aspects of the AEF process. More importantly, force providers must be able to explain the "how" and "why" of the AEF to Airmen at all levels. This section focuses on the AEF organization and unit type codes (UTC) management documents.

601. Air and space expeditionary force organization

The AF organizes, trains, equips, and sustains its forces to be ready to meet any upcoming national security challenges. It does this by utilizing the AEF concept. This concept enables the AF to provide forces that are trained and ready to support national defense commitments through a structured approach that enhances total force readiness and sustainment. Each AEF is composed of a full range of capabilities that provide war-fighting combatant commanders with rapid and responsive airpower assets and personnel. Let's start by discussing AEF teaming.

Air and space expeditionary force teaming

The AF has transitioned to the AEF teaming construct. This method enables larger groups of UTCs to be tasked from fewer units. It also allows Airmen to deploy with supervisors and other members assigned to their unit and base. AEF teaming provides deployment predictability, stability, and readiness while sharing experiences throughout the deployment process. This construct is based on a "you work at home together, you deploy together" philosophy.

Teams are assigned a unit indicator code (UIC) that comprises multiple UTCs. The UIC is a six character alphanumeric code that uniquely identifies each active, reserve, and National Guard unit in the armed forces. AF functional area managers align their respective UTCs to UICs and validate deployment-to-dwell (D2D) ratios to meet AEF requirements. The goal is to align functional areas to the least strenuous D2D ratio in order to minimize risk to the force.

The standard D2D battle rhythm for the active duty component of the AF is 1:2 (one period deployed or vulnerable to two periods at home station). Other varying constructs of the AEF will deploy, or be vulnerable, at different ratios depending on their unique mission skillsets.

Air and space expeditionary force main principles

Three main principles provide the foundation for how the AEF is structured and executed: predictability, equitability, and transparency.

Predictability

The AEF battle rhythm allows the AF to maintain a high state of readiness for all forces. Alignment of forces across AEF blocks defines battle rhythm and addresses the question of "who goes first?" This approach provides a logically organized structure during periods of surge, supplying near seamless combatant commander (CCDR) support. During rotational operations (OPS), the AEF supplies Airmen a level of predictability. Predictability varies during surge OPS, which necessitate higher D2D ratios. This is the cost the AF must accept when supporting CCDR needs. CCDR needs determine which skills or capabilities are needed, while supporting commanders determine how to organize, train, equip, and posture forces to meet those needs. The expectation should be perfectly clear to all. There is no such thing as a "short-notice" deployment during an Airman's designated vulnerability period. All Airmen need to be ready to deploy during their entire vulnerability period, because their capabilities could be required at any time during the vulnerability period. However, certain capabilities do not align with a standard AEF schedule.

Equitability

In addition to providing predictability, the AEF teaming concept ensures Airmen in the same functional area deploy at the same pace with an equitable share of tasking between similarly skilled or coded units throughout the AF. Expeditionary taskings exist in a dynamic world so there will always be varying rates of deployment throughout the AF. Some combat support or aviation units may deploy only a portion of a skill set in a given deployment period, while other units may deploy all of their UTCs during the deployment period. Force providers need to understand there will always be different levels of tasking. The key take-away is that if one of your units is operating at a higher D2D rate, then every other unit of similarly coded skill sets in the AF will be under the same level of stress.

Transparency

As processes and systems have matured, Airmen have seen increased transparency in the day-to-day operation of the AEF in the sense that there is little mystery to the process: the when, why, and how should be visible and understood by every Airman. CCDR requirements and the AEF timeline drive the "when" part of the equation. Fewer units have horror stories of "short-notice" AEF taskings. At times, units will shortfall at the last minute, but the questions remain the same: "How long has the requirement been established?" "Who knew about the requirement?" "Is everyone contributing at the same level of effort? The "why" is answered by thoroughly understanding your UTC mission capability (MISCAP). Understanding the "how" requires a basic knowledge of UTC development and posturing in the AF, and the effect that functional managers have on the process.

It is important that all applicable commanders report the status of each UTC on a monthly basis using the Air and Space Expeditionary Force Unit Type Code Reporting Tool (ART). Some UTCs are considered "more available to deploy" than others, while others will be considered "deployed in place" supporting CCDR warfighting requirements. Green, yellow, and red readiness ratings in ART affect UTC selections. Sometimes two "red" UTCs are forced to combine specific parts to make one deployable "green" UTC.

The key message for force providers is that ART metrics are not to be used as a "report card." However, ART accuracy and timeliness is tracked, reported, and reviewed at the major command (MAJCOM) level. Transparency is required up and down the entire AEF system. The AF collects and compares these metrics through open forums at the MAJCOM level to ensure that everyone operates

within the same guidelines. Everyone is held accountable for how the AEF rotation is executed. Each wing is held accountable on posturing, ART reporting, deployment discrepancies, and assigning resources in a timely manner.

Enabler forces

In the past, the AF would supplement forces in the AEF deployment periods with a strategic "enabler" or common user assets. Some of these forces were long-range mobility, special OPS forces, space forces, and other uniquely categorized forces that provide support to authorized organizations within and outside of the Department of Defense (DOD), including AF movements of AEF forces. Forces postured in the enabler categories did not have stability and predictability.

With the new AEF teaming construct, these enabler forces are now called demand force teams (DFT). These teams still have unique combat and support capabilities that may require a different battle rhythm than the normal AF AEF schedule. The following are a few components considered DFTs that you may encounter as Radar, Airfield & Weather Systems (RAWS) technicians:

- RED HORSE.
- Airfield OPS.
- Combat communications.
- Theater battle management.
- Special OPS and rescue.
- Engineering & installation (E&I).
- Contingency response group (CRG).

These forces, like enabler forces, are fluid and do not always have a standard D2D period, but the recent AEF teaming concept is slowly bringing these components closer to the normal cycles.

Deployment responsibilities

Your AEF indicator, representing your assigned block or designation on a DFT, is based on your career field, base, and unit. Your commander assigns the AEF indicator and your unit deployment manager (UDM) usually executes the action. Consider your deployment history in assigning the AEF indicator. Your AEF assignment will be visible on the virtual military personnel flight (vMPF) website. You will remain associated with your AEF indicator for the duration of your assignment to the unit.

You are responsible for knowing your AEF indicator and completing all required training. Additionally, you must have your personal affairs in order and plan around your vulnerability period. In addition to the preceding responsibilities, before you deploy you need to be aware of the following:

- Know your destination.
- Know your unit line number (ULN).
- Know the duration of your deployment.
- Ensure you have an accurate travel itinerary.

You can see that preparing AEF combat ready forces is a complex and demanding process. You can help make this process efficient by being ready to do your part. Keep your personal matters in order; stay healthy, fit, and trained. Next, another aspect of deployments will be explained—the UTC.

602. Unit type code management documents

During Operations Desert Shield and Desert Storm, the deploying wing was responsible for initially sustaining itself. Equipment usually did not arrive sooner than 2 or 3 days after the initial deployment. Since combat assets were separate entities not tied to flying wings, airlift availability flights were difficult to schedule. Most combat OPS packages require numerous aircraft to move their equipment

and personnel. This is not adequate for today's need for sustained deployed combat capabilities. Due to our mission in the Middle East is likely to continue for years to come, the AF needs to better support these demanding OPS. This lesson starts by discussing the role the Air and Space Operations Center (AOC) play in supporting this mission.

Air and Space Operation Center

The AOC's primary mission is to provide the joint force air component commander (JFACC) with the tools necessary to fight and win a major theater war, coordinated with all land, sea, and air forces. Deployed combat systems are very dynamic and diverse. The following are two important principles that apply in deployed environments:

1. Provide support for the JFACC with the ability to begin air OPS and win a major theater war.
2. Enforce OPS security to ensure safe and secured communications and manage acceptable levels of risk to accomplish the mission.

To begin building packages to support these concepts, you have to start with the UTC.

Unit type code

A UTC is the basic building block used in joint force planning and deployments of AEFs. A UTC defines a capability composed of personnel and/or equipment requirements needed to support the national military strategy during deliberate, crisis action, and rotational planning. The UTC has a 5-character alphanumeric code used to represent the combination of resources (equipment) and manpower (personnel).

In addition to the equipment and people, the UTC describes the logistics needed to use this force in a deployment. UTCs are formed in order to accomplish a specific function. While most UTCs represent personnel and an equipment package, there are personnel only and equipment only UTC packages.

AF units present their capabilities or make their UTCs available through a process called UTC posturing (positioning) and coding. To make sure proper posturing and coding of all of a unit's capabilities, commanders must know their UTCs and the capabilities their wings/units are making available. Since all Airmen are in an AEF, you will most likely be assigned to a UTC. Therefore, it is important not only for commanders, but also for you to know and understand this process.

It is extremely important for deployable units to be familiar with the documentation required to process its personnel and equipment for deployment. Without the proper paperwork, a UTC will never be able to leave its home station. There are many systems utilized by deployable units, such as the manpower and equipment force package (MEFPAK), logistics module (LOGMOD), ART and resource readiness formerly called Status of Resources and Training System (SORTS). The next areas describe some of the products developed in these systems.

Designed operational capability statement

A designed operational capability (DOC) statement is the summary of a unit's mission and resources for which it has been organized, designed and equipped. Its primary purpose is to summarize the unit's mission(s) using the Defense Readiness Reporting System (DRRS) core mission essential task list. It also provides units with a convenient single document referencing all authoritative data sources that determine the pool of resources and training to measure and report in resource readiness. Units, normally squadrons, with a unit descriptor code of combat, combat support, or combat service support within the personnel accounting symbol (PAS) record, are measured units. Measured units are required to have a single, all-encompassing DOC statement completed in DRRS. The DOC statement will provide the status of a unit's wartime capability based on manpower and material. It is limited only to those resources authorized for that unit.

MAJCOM/field operating agency (FOA) direct reporting unit (DRU) Readiness Offices manage, coordinate, and release/publish/approve resource readiness DOC Statements. MAJCOM/FOA/DRU

commanders are required to conduct annual reviews on the DOC statements. Unit commanders must sign the DOC statement upon assumption of command, and annually thereafter, verifying completion of a review, and that they understand the resource readiness reporting requirements in the DOC statement. Current DOC statements must be marked with the last review date and maintained for the duration of the initial DOC statement. Replace or rescind the impact statement when it is altered or outdated, as applicable. For detailed information and instructions on DOC statements, refer to AFI 10–201, *Force Readiness Reporting*.

Logistics detail

The logistics detail (LOGDET) is a product of the logistics force packaging system (LOGFOR), which provides the capability to create and maintain the standard logistics details consisting of supplies and equipment for each UTC in the AF. The LOGFOR is one of four major capabilities of the LOGMOD system, which is a logistics-planning program that receives and maintains the cargo and personnel details for UTCs and tasking. The LOGFOR functions include the following:

- Providing equipment-planning data for deploying units.
- Providing the foundation for individual force capability strategic airlift requirements estimates for planning.
- Providing inputs to the Joint Operation Planning and Execution System (JOPES) database.
- LOGDET is generic and capable of worldwide deployment.
- Equipment planning data for use by AF units in their deployment plans.
- Baseline for communication among the MEFPAK responsible commands.

The LOGDET defines the standard passenger and equipment movement requirements for each UTC. Pilot units develop LOGDETs to allow for 30 days of sustainment for UTCs while in bare base conditions. The LOGDET contains national stock numbers (NSN) for each item in the UTC, which provides a packing list for all like units in order to meet UTC requirements. In addition to NSN information, the LOGDET contains the weights, special codes (hazards, etc.), quantity and allowance source code of each item to help determine transportation, and equipment item requirements. The LOGDET serves as a packing list detailing increment and container placement of each item to help units eliminate some of the guesswork in preparing UTCs for shipment.

Manpower force packaging system

Just as LOGDETs determine equipment requirements for deployment planning and execution, the manpower force (MANFOR) packaging system provides manpower requirements. The MANFOR is a component of the Deliberate and Crisis Action Planning and Execution Segments (DCAPES) and reflected in the MEFPAK. It is a database containing the UTC title, MISCAP, and manpower detail for each applicable UTC. It provides an itemized list of manpower requirements by UTC line number, personnel quantity, pay grade, AFSC, and title. The objective of the MANFOR is to provide planners with standardized force capability manpower requirements for OPS planning, execution documents and readiness measurement. It lists the specific manpower required to perform the mission as defined in the UTC's MISCAP. The personnel UTC is built to accommodate 30-days of sustained manning coverage with members working six 12-hour shifts per week (24-hour UTC coverage requirements are determined by the functional area manager). The MANFOR manpower details provide the following information for UTC personnel requirements:

- Special experience identifiers (if determined).
- Required pay grade of each individual.
- Standard AF functional account code.

- AFSC of each individual assigned.
- Command remarks (if applicable).
- Quantity of personnel required.

Self-Test Questions

After you complete these questions, you may check your answers at the end of the unit.

601. Air and Space Expeditionary Force organization

1. What concept enables the AF to provide forces that are trained and ready to support national defense commitments through a structured approach that enhances total force readiness and sustainment?

2. What three things does AEF teaming provide every Airman?

3. What is the standard D2D battle rhythm ratio for the active duty personnel?

4. What three main principles provide the foundation for how the AEF is structured and executed?

5. What concept ensures Airmen in the same functional area deployed at the same pace with an equitable share of tasking between similarly skilled or coded units throughout the AF?

6. At what level is ART accuracy and timeliness tracked, reported, and reviewed?

7. How are the older “enabler” forces now referred?

8. Where can you see your AEF indicator after it has been assigned to you?

602. Unit type code management documents

1. What is the primary mission of the AOC?

2. What does a UTC define?

3. What process allows AF units to present their capabilities or make their UTCs available?

4. What is the DOC statement?

5. When does a unit commander sign the DOC statement?

6. What defines the standard passenger and equipment movement requirements for each UTC?

7. What does the MANFOR contain?

1–2. Deployable Missions

This section details some of the aspects of deployable components applicable to the RAWS career field. The first lesson provides some general details of deployment equipment and units that you may experience in a deployed environment. The second lesson describes unmanned aircraft and their importance to the deployed mission.

603. General components of the deployable mission

Other volumes of this CDC will cover specific equipment utilized in normal deployment situations. This lesson will give you an overview of some deployed missions that you may serve on or support during a deployment and during your normal day-to-day duties. These topics do not include every aspect of the deployed career field responsibilities so you must learn that flexibility is the key to success in a deployed location, and ultimately in any environment. This lesson starts by discussing Deployable Air Traffic Control and Landing Systems (DATCALS).

Deployable Air Traffic Control and Landing Systems

The airfield OPS mission is to deploy worldwide in support of operational forces at host nation or bare base locations, providing basic airfield services and combat airspace support to the theater AOC. In addition, DATCALS provide the capability to identify, sequence, and separate aircraft, to include provide final approach guidance and control instructions to aircraft at deployed locations in all types of weather. DATCALS equipment and personnel can be tasked to provide liaison, control tower, radar approach control (RAPCON), precision landing, and mobile tactical air navigation (TACAN) services as a standalone unit or in any combination. A DATCALS package may contain some or all of the following:

- AN/TPN–19 Transportable Radar Approach Control Set.
- AN/TPN–48 Mobile Tactical Air Navigation Beacon.
- AN/MSN–7 Mobile Air Traffic Control Tower.
- AN/TPN–25 Precision Approach Radar (PAR).

Other support items that may be included are OPS shelters, power production equipment, and environmental control units.

DATCALS do not have a dedicated communications net; therefore, they should be capable of integration with existing communications (both US and allied) to form a system that ensures safe, efficient flow of air traffic supporting the combat effort and maximizing flexibility. Common user networks are preferred for communications linking DATCALS to the operating environment. DATCALS operate nearly autonomously from other theater systems. These circuits should provide part of the base communications infrastructure and require no unique information system support.

Ground Theater Air Control System

The Ground Theater Air Control System (GTACS) provides the ability to rapidly detect and identify airborne targets with minimal or no support. GTACS brings a combination of range, precision, low signature, and control to the war fighter's arsenal, while providing the capability to hold at risk an enemy's war-making potential. Additionally, GTACS can deploy in two or more configurations, each suited to hold emerging targets at risk through an integrated air defense control system. This makes possible the rapid deployment of assets tailored to countermeasure a wide range of threats.

GTACS can be worldwide deployable to any number of fixed base sites. Deployment in either a control-reporting center or control reporting element configuration represents the assemblage of considerable resources. With some exceptions, back-shop support normally is *not* deployed. For these reasons, a reduced deployment footprint is critical. Maximizing the use of digital data will help reduce this footprint.

The automated air tasking order (AATO) software application is configured from non-developmental commercial off-the-shelf (COTS) hardware. COTS and government-developed software provide the modular control equipment (MCE) unique air tasking order (ATO) message handling and interface processing suite. The AATO application's electronic data processing hardware and software consist of a theater battle management core system (TBMCS) remote workstation. It is augmented with AATO unique software to control the overall AATO process and to interface with the MCE to make the data available to the control and reporting element (CRE) air surveillance, identification, and weapons control functions. In addition, to the AATO functionality, the AATO operator may use the functions provided by the TBMCS remote workstation. The AATO functionality provides the AATO operator with the ability to select ATO messages transmitted over the TBMCS wide area network (WAN) for automatic or semiautomatic processing. In addition, the AATO operator has the ability to review and edit the ATO data contained in the MCE database.

Ground-based command and control (C2) elements of the Theater Air Control System (TACS) that support air OPS performed by combat air forces provide the JFACC with several capabilities. Those capabilities are the means to plan, direct, and control air OPS, as well as coordinate these air OPS with ground, naval, and coalition forces. The next table covers the functions and capabilities of GTACS.

GTACS Functions and Elements	
Major Functions	**Battle Management Elements**
• Airborne airstrike coordination and control. • Close air support coordination and control. • Ground target sensor surveillance. • Command planning and direction. • Aircraft control and warning. • Airspace management. • Tactical airlift.	• Air and Space Operations Center (AOC). • Air Support Operations Center (ASOC). • Control and reporting element (CRE). • Control and reporting center (CRC). • Tactical air control party (TACP).

The keystone of the GTACS is the AN/TYQ–23 MCE. It is an automated computer-based information system operating in a proprietary environment that provides a variety of automated

information functions such as aircraft surveillance, flight follow, control, and communication functions within the GTACS.

The AN/TPS–75 radar set is also included. A transportable radar system provides simultaneous, range, azimuth, height, speed, and identification, friend or foe/selective identification feature (IFF/SIF) information on aircraft within a radius of 240 nautical miles (nmi). The radar system collects aircraft information regardless of weather conditions or enemy jamming attempts.

Contingency response groups

The CRG is both an in-garrison organization and deployable unit. The in-garrison organization consists of two squadrons, a global mobility squadron (GMS) and a global mobility readiness squadron (GMRS). The GMS includes the operational and combat support mission elements of the aerial port, C2, and quick-turn aircraft maintenance, while the GMRS includes selected mission elements of agile combat support such as security forces and other base operating support and integration support roles.

The deployable CRG's primary mission is to open and/or operate airfields or airbases after seizure; or whenever needed to assess, open, and initially operate airbases in support of the AF component of the combatant command (COCOM), although operational control will usually not transfer. The groups consist of a standardized force dedicated to the base opening task. This group includes a tailored selection of all forces needed after seizure, or handoff from seizure forces, to establish initial air mobility C2, and operate the flow of air mobility in and out of that airfield. CRGs may open an airfield for the AF, another service, or even a coalition partner. To ensure continuity of OPS, CRGs should coordinate planning and agreements with the theater commander, Air Force forces (COMAFFOR)/JFACC staff.

CRGs typically have their own communications systems and personnel (e.g. land mobile radios, satellite radios, air-ground-air radios, etc.), but eventually will require augmentation, especially as forces begin a rotational schedule.

Engineering and installation units

The primary mission of E&I units are to install, reconstitute, and test critical command and control systems for COCOMs anywhere and anytime. Their mission is also to ensure commanders have communications capability throughout any level of conflict. While the Air National Guard and one active duty squadron—the 85th Engineering Installation Squadron (EIS)—still proudly perform this critical mission.

The 85 EIS is an indispensable part of the USAF war-fighting community and part of Air Force Space Command (AFSPC), located at Keesler AFB, Mississippi. This unit reports to the 38th Engineering Installation Group in Tinker AFB, Oklahoma and is a rapid response force that is deployable worldwide. This organization has an impressive response time of deploying personnel and resources in less than 72 hours. 85 EIS personnel can travel to your location, assess your needs, write a statement of work, give you an estimated cost, and in most instances, assist in ordering the material.

Additionally, the 85 EIS provides in-theater wartime and emergency peacetime restoration of information systems. Their responsive combat capabilities have resulted in customer requests from all over the world. The 85 EIS has deployed teams to Saudi Arabia, Kuwait, Iraq, Afghanistan, Turkey, Italy, Germany, England, Spain, Japan, Korea, Virgin Islands, Puerto Rico, Canada, Panama, Ascension Islands, and throughout the United States.

Air and Space Operations Center

The world is undergoing a fundamental restructuring in many dimensions and at an extraordinary pace. Changes in technology and the rapid assimilation of that technology in the marketplace are resulting in quantum changes to products, services, and organizations. Information ownership, stewardship, access, and possession are recognized as measures of power and influence. Technology

is rapidly diffusing this power downward to individuals and outward to those organizations and nations best equipped to exploit it. This pattern of change represents both an important opportunity and a demanding challenge for establishing and meeting DOD command, control, communications, computers, intelligence, surveillance, and reconnaissance (C4ISR) system(s) requirements.

Through C4ISR programs, the DOD collects, processes, produces, disseminates, and uses information. The DOD must have agile, sustained access to and control of the information and the information environment needed for mission execution and support. To this end, DOD has invested in its own version of the Internet, the global information grid (GIG). The GIG, defined as virtually all

DOD information technology infrastructures, exists to provide the timely and accurate information that war fighters need to assure victory.

Military commanders must be able to synchronize and integrate high-tempo OPS anywhere in the world. GIG connectivity between US and allied forces is a critical mission capability and force enhancer for worldwide readiness, mobility, responsiveness, and OPS. System interoperability and information integration must be achieved on the battlefield to maximize warfighter benefits to improve joint and multinational OPS, and to support the national command authorities. Modernized information systems must be implemented to support reengineered functional processes. Here you will learn about some of the more commonly known C4ISR systems that you will support. You will also learn about some of the platforms that are used within C4ISR.

Roles of the Air and Space Operations Center

AN/USQ–163 Falconer, the senior element of the TACS, is the weapon system that the COMAFFOR provides to the JFACC for planning, executing, and assessing theater-wide air and space OPS. TACS is composed of both airborne and ground-based C2 elements. Airborne elements of the Theater Air Control System (AETACS) are the Airborne Warning and Control System (AWACS) and the Joint Surveillance Target Attack Radar System (JSTARS). The GTACS elements are the AOC, CRC, ASOC, and TACP. The AOC is responsible for the following activities:

- Disseminating tasking orders.
- Developing OPS strategy and planning documents.
- Executing day-to-day peacetime and combat air and space operations.
- Providing rapid reaction to immediate situations by exercising positive control, coordination, and deconfliction of weapon systems.
- Assessing progress of JFACC air and space support to the joint force commander’s (JFC) campaign, effectiveness of force employment, and efficacy of internal AOC processes.

Although the AF provides the core manpower for the AOC, other service components provide personnel in support of exercises and contingency OPS. To integrate the numerous aspects of air and space OPS, the AOC coordinates closely with superior and subordinate C2 nodes, as well as the headquarters of other functional and service component commands. All missions begin with the issuing of an ATO, which is the lead planning document commanders follow. Normally it provides specific instructions including call signs, targets, sorties, controlling agencies, as well as general instructions.

Chief of Air and Space Operations Center systems teams

Collectively, the five teams provide AOC-unique services and tools for employment, generation, planning, and direction of AEF forces. The communications focal point (CFP) normally establishes an AOC weapon system help desk to provide AOC systems user with a central one-stop service point for all C2 systems and services managed by the chief of AOC systems. In addition, the CFP normally executes tactical control of the AOC area support C2 unit(s) providing transmission, switch, radio, power, and other services for AOC connectivity to external forces. Other C2 resources are embedded

in core AOC divisions (i.e., frequency manager in combat plans division) and operate as extensions of, and in coordination with, the chief of AOC systems.

604. Unmanned aerial vehicles

Unmanned aircraft (UA), or unmanned aerial vehicles (UAV), are remotely piloted or self-piloted aircraft that can carry cameras, sensors, communications equipment, or other payloads. They provide reconnaissance and intelligence-gathering capabilities. They are used extensively in the Middle East and where more challenging roles are envisioned, to include combat missions.

By the early 1990s, the DOD sought UAVs to satisfy surveillance requirements in close range (within 50 kilometers), short range (within 200 kilometers), or endurance (anything beyond 200 kilometers) categories. The current classes of these vehicles are the tactical UAV that operate in the endurance category. We will start this lesson by discussing the DOD unmanned aircraft systems roadmap.

Department of Defense unmanned aircraft systems roadmap

As the global war on terrorism has progressed, the contributions of UA in sorties, hours, and expanded roles continue to increase in support of Operation Enduring Freedom and Operation Iraqi Freedom. Their once reconnaissance-only role is now shared with strike, force protection, and signals collection. These roles have helped reduce the complexity and time lag in the sensor-to-shooter chain for acting on “actionable intelligence.” UA systems continue to expand, encompassing a broad range of mission capabilities.

These diverse systems range in cost from a few thousand dollars to tens of millions of dollars, and range in capability from micro air vehicles (MAV) weighing less than one pound to aircraft weighing over 40,000 pounds. UA and unmanned systems in general are changing the conduct of military OPS by providing unrelenting pursuit without offering the terrorist a high-value target or a potential captive.

As the DOD develops and employs an increasingly sophisticated force of unmanned systems, technologists, acquisition officials, and operational planners require a clear, coordinated plan for the evolution and transition of this capability. The overarching goal of this roadmap, while following the strategic planning guidance, is to guide the military departments and defense agencies toward a logical, systematic migration of mission capabilities to this new class of military tools.

The goal is to address the most urgent mission needs that are supported both technologically and operationally by various UA systems. Some DOD missions can be supported by the current state-of-the-art unmanned technology where the capabilities of current or near-term assets are sufficient and the risk to DOD members is relatively low. Other mission areas, however, are in urgent need of additional capability and present high risk to aircraft crews. These mission areas, highlighted in this “roadmap,” will receive significant near-term effort by the DOD.

Tactical unmanned aerial vehicle

The tactical unmanned aerial vehicle (TUAV) system is designed to provide a commander primary day/night reconnaissance, surveillance, target acquisition, and battle damage assessment for ground maneuvers and movement. TUAVs support tactical commanders with near-real-time imagery intelligence at ranges up to 200 kilometers. The military TUAV segment is anticipated to dominate markets of many countries and experienced users. Various subcategories of the system define the overall tactical market, which boasts a mixture of fixed wing, rotary wing, and vertical take-off and landing systems.

Self-Test Questions

After you complete these questions, you may check your answers at the end of the unit.

603. General components of the deployable mission

1. What services can DATCALS equipment and personnel be tasked to provide?

2. Name three types of support equipment that may accompany DATCALS equipment.

3. What does the GTACS provide the AF's warfighting arsenal?

4. What is the software application and interface utilized by the GTACS?

5. What automated information functions do the AN/TYQ–23 MCE provide within the GTACS?

6. Within what range does the AN/TPS–75 radar set provide aircraft information?

7. What squadrons make up an in-garrison CRG?

8. What is a deployable CRG's primary mission?

9. What is the primary mission of an E&I unit?

10. How does the JFACC utilize the AN/USQ–163 Falconer?

11. Which lead planning document is issued in order to start a mission?

12. What information does an ATO normally contain?

604. Unmanned aerial vehicles

1. What roles do UA have in today's OPS?

2. What two ways do UA support urgent mission needs?

3. List the purpose of the TUAV system.

Answers to Self-Test Questions

601

1. AEF concept.
2. (1) Deployment predictability.
   (2) Stability.
   (3) Readiness.
3. 1:2, 1 period deployed or vulnerable to 2 periods at home station.
4. (1) Predictability.
   (2) Equitability.
   (3) Transparency.
5. AEF teaming.
6. MAJCOM level.
7. Demand force teams.
8. On the vMPF website.

602

1. Providing the JFACC with the tools necessary to fight and win a major theater war coordinating with all land, sea, and air forces.
2. A capability composed of personnel and/or equipment requirements needed to support the national military strategy during deliberate, crisis action, and rotational planning.
3. UTC posturing (positioning) and coding.
4. Summary of a unit's mission and resources for which it has been organized, designed and equipped.
5. Upon assumption of command, and annually thereafter.
6. LOGDET.
7. UTC title, MISCAP, and manpower detail for each applicable UTC.

603

1. Liaison, control tower, RAPCON, precision landing, and mobile TACAN services as a standalone unit or in any combination.
2. (1) Operations shelters.
   (2) Power production equipment.
   (3) Environmental control units.
3. A combination of range, precision, low signature, and control to the war fighter's arsenal while providing the capability to hold at risk an enemy's war-making potential.
4. AATO software application and the MCE unique ATO message handling and interface processing suite.

5. Aircraft surveillance, flight follow, control, and communication functions within the system.
6. 240 nmi.
7. A GMS and a GMRS.
8. Open and/or operate airfields or airbases after seizure, or whenever needed to assess, open, and initially operate airbases in support of the AF component of the COCOM.
9. Install, reconstitute, and test critical command and control systems for COCOMs anywhere and anytime.
10. Planning, executing, and assessing theater-wide air and space OPS.
11. ATO.
12. Specific instructions including call signs, targets, sorties, controlling agencies, as well as general instructions.

604

1. Reconnaissance, strike, force protection, and signals collection.
2. Technologically and operationally.
3. Provide a commander primary day/night reconnaissance, surveillance, target acquisition, and battle damage assessment for ground maneuvers and movement.

Complete the unit review exercises before going to the next unit.

Unit Review Exercises

Note to Student: Consider all choices carefully, select the *best* answer to each question, and *circle* the corresponding letter. When you have completed all unit review exercises, transfer your answers to the Field-Scoring Answer Sheet.

Do not return your answer sheet to the Air Force Career Development Academy (AFCDA).

1. (601) The Air Force (AF) organizes, trains, equips, and sustains its forces to be ready to meet
   a. any upcoming national security challenges.
   b. requests by the governor of each state.
   c. local management forces.
   d. foreign rotational surges.

2. (601) Which deployment process allows Airmen to deploy with supervisors and other members assigned to their unit and base?
   a. Predictability.
   b. Deployment-to-dwell (D2D).
   c. Mission capability (MISCAP) reporting.
   d. Air and space expeditionary force (AEF) teaming.

3. (601) The three main principles that provide the foundation for how the air and space expeditionary force (AEF) is structured and executed are
   a. predictability, equitability, and short-notice requests.
   b. equitability, short-notice requests, transparency.
   c. predictability, equitability, and transparency.
   d. scope, size of needed force, units tasked.

4. (601) Which teams have unique combat and support capabilities that may require a different battle rhythm than the normal AF air and space expeditionary force (AEF) schedule?
   a. Contingency management teams.
   b. Theater installation groups.
   c. Airfield enabler teams.
   d. Demand force teams (DFT).

5. (602) What is the *primary* mission of the air and space operations center (AOC)?
   a. Provide the Joint Force Air Component Commander (JFACC) with the tools necessary to fight and win a major theater war coordinating with all land, sea, and air forces.
   b. Manage acceptable levels of risk necessary to fight and win a major theater war.
   c. Enforce operations security to ensure safe and secured communications.
   d. Deploy flying wings to fight and win a major theater war.

6. (602) What defines a capability composed of personnel and/or equipment requirements needed to support the national military strategy during deliberate, crisis action, and rotational planning?
   a. Unit line item (ULI).
   b. Unit type code (UTC).
   c. Air and space operations center (AOC).
   d. Logistics force packaging system (LOGFOR).

7. (603) What does the Deployable Air Traffic Control and Landing Systems (DATCALS) mission provide to operational forces at host nation or bare base locations?
   a. Basic airfield services and combat airspace support to the theater air and space operations center (AOC).
   b. The capability to identify, sequence, and provide navigation beacons in remote mountain terrains.
   c. A dedicated communications net to ensure safe and efficient flow of air traffic.
   d. Final approach guidance only in good weather.

8. (603) Which piece of equipment brings a combination of range, precision, low signature, and control to the war fighter's arsenal, while providing the capability to hold at risk an enemy's war-making potential?
   a. Radar Approach Control (RAPCON) System.
   b. Ground Theater Air Control System (GTACS).
   c. AN/MSN–7 Mobile Air Traffic Control Tower.
   d. AN/TPN–48 Mobile Tactical Air Navigation Beacon.

9. (603) Which option is *not* a major function of the Ground Theater Air Control System (GTACS)?
   a. Command planning and direction.
   b. Aircraft control and warning.
   c. Global mobility readiness.
   d. Tactical airlift.

10. (603) What is the *primary* mission of engineering and installation (E&I) units?
    a. Install, reconstitute, and test critical command and control systems.
    b. Open and/or operate critical command and control systems.
    c. Install, reconstitute, and test airfields or airbases.
    d. Open and/or operate airfields or airbases.

11. (603) Which action describes a responsibility of the air and space operations center (AOC)?
    a. Disseminating tasking orders.
    b. Assessing the joint force commander's (JFC) viability.
    c. Developing decentralized support for United States (US) operations.
    d. Providing a careful reaction to situations by determining the most important course of action.

12. (603) Who normally establishes an air and space operations center (AOC) weapon system help desk to provide systems user with a central one-stop service point for *all* command and control (C2) systems and services?
    a. C2 focal point.
    b. Command focal point.
    c. Communications focal point (CFP).
    d. Communications, C2 focal point.

13. (604) The two *main* capabilities that unmanned aircraft or unmanned aerial vehicles provide are
    a. reconnaissance and in-flight refueling.
    b. reconnaissance and intelligence gathering.
    c. intelligence gathering and in-flight refueling.
    d. intelligence gathering and autonomous battle planning.

Please read the unit menu for unit 2 and continue ➔

Unit 2. Deployable Radar Equipment

2–1. AN/MPN–14K Landing Control Central 2–1
605. General operating characteristics 2–1
606. Functional operation 2–3
2–2. AN/TPN–19 Landing Control Central 2–10
607. System purpose and description 2–10
608. AN/TPN–24 Airport Surveillance Radar 2–12
609. AN/TPN–25 Precision Approach Radar 2–18
610. Operations section 2–26
2–3. AN/TPX–42A Secondary Surveillance Radar 2–32
611. Overview of the identification, friend or foe/selective identification feature system 2–32
612. Modes of interrogation 2–34
613. Control box functions 2–34
2–4. AN/TPS–75 Aircraft Control and Warning System 2–37
614. System purpose and description 2–37
615. Overall system operation 2–39
616. Radar initialization and control functions 2–43
617. Transmitter/frequency generator/driver functions 2–45
618. AN/UPX–37 Interrogator Set 2–48

DEPENDING ON WHERE you are assigned as a RAWS technician, you may see various types of deployable radar equipment. Some may never see deployment equipment for most of their careers but it is vital that you know how these systems operate in case deployments or real world situations arise. The information in this unit provides system knowledge on some of the radar equipment that is utilized in the career field. This information will help you identify basic facts and state general principles of deployable radar systems.

2–1. AN/MPN–14K Landing Control Central

The AN/MPN–14K is a mobile ground approach system used mainly by Air National Guard air traffic controllers to identify, sequence, and separate participating aircraft. It also provides final approach guidance through air defense corridors and zones, and coordinates identification and intent with local air defense units at assigned airports and air bases. These services can be provided in all types of weather.

605. General operating characteristics

The AN/MPN–14K Landing Control Central (LCC) consists of an OPS trailer and a radar trailer. Let’s start this lesson by discussing trailer descriptions.

Trailer descriptions

The OPS trailer provides a centralized operating area from which to control the movement of aircraft within a 60-mile radius. The OPS trailer also provides a precision operating area from which to control the final approach of landing aircraft.

The radar trailer contains the radar equipment (transmitters, receivers, processors, and antennas). It also contains part of the communications equipment, airport surveillance radar (ASR) indicator, and a PAR indicator, which allows this trailer to be used for autonomous operation, if necessary. The two trailers can be separated up to a distance of approximately 100 feet (ft.) (125-foot cables are

furnished) and may be shipped on standard railroad flatcars or transported by aircraft. The operations and radar trailers are designed to be towed in tandem or as individual units (fig. 2–1).

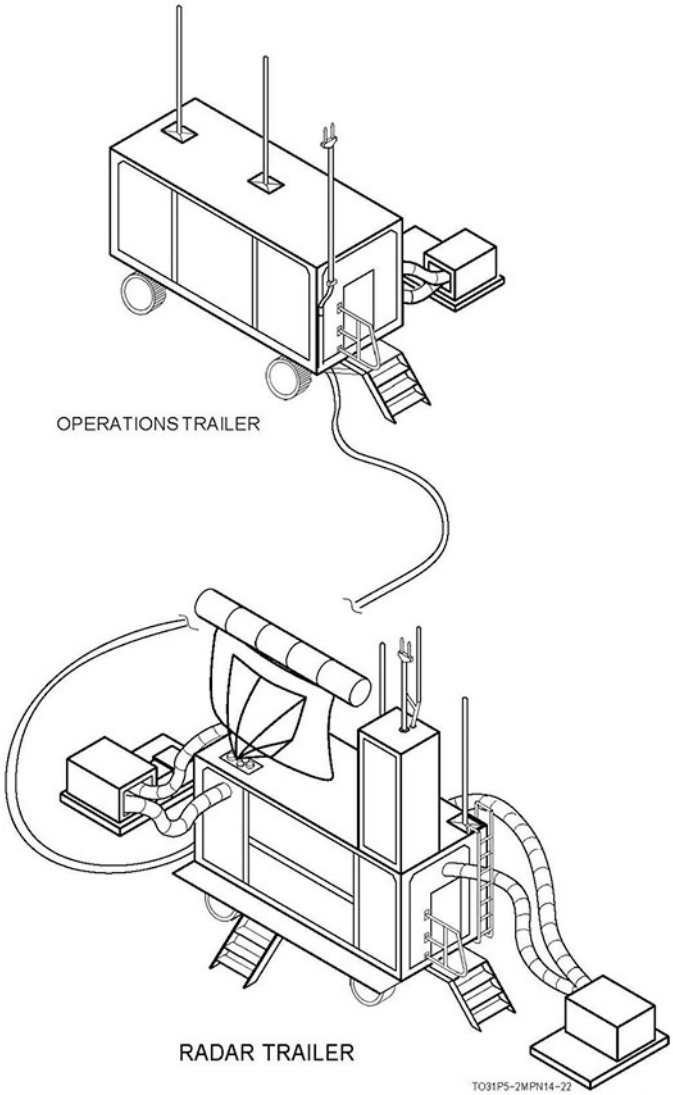

Figure 2–1. Operations and radar trailers.

Each ASR indicating position can display the radar and video mapper data required to locate and observe aircraft within a 60 nmi radius and to identify aircraft within a 200 nmi radius using the identify friend or foe (IFF) equipment. The departure controller can monitor aircraft leaving the base and guide them through the control area. The approach controller monitors aircraft arriving at the base and directs them through the initial phases of the approach and into PAR control. In the event the runway in use is not covered by the PAR system, or in an emergency, the approach controller can utilize plan position indicator (PPI) letdown procedures to guide the aircraft to the runway.

The PAR indicating position displays the radar data required for the control of aircraft on a final approach to the runway. The PAR controllers direct the pilot to guide his aircraft so that the echo moves along the cursors (electronically produced lines representing optimum glidepath and courseline) to touchdown.

Trailers communication facilities capabilities and limitations

Communication facilities in the two trailers provide complete two-way ground-to-air radio communication for the controllers, intercommunication between controllers, and intercommunication

between the operations and radar trailers. These facilities also provide request and acknowledgment signaling between the operations trailer and the control tower where possible, and telephone communication direct to other base facilities with dial lines through the base telephone exchange. A few of the system's important capabilities and limitations are stated in the next table.

Capabilities and Limitations		
	Search	**Precision**
FREQUENCY WAVELENGTH	2710 to 2890 megahertz (MHz) (in 5 MHz steps) (S-Band)	9000 to 9160 MHz (in 5 MHz steps) (X-Band)
RANGE	At least 15 nmi minimum with 75% probability of detection (Pd)	At least 15 nmi minimum with 90% Pd
COVERAGE: Azimuth Elevation	360° 30°	20° 8°
ACCURACY: Azimuth Elevation Range	1° of true position --- 4% of true range or 500 ft., whichever is greater	30 ft. or .2°, whichever is greater 20 ft. or .2%, whichever is greater 2% of true range
RESOLUTION: Azimuth Elevation Range	2.3° for equal size targets at same range .55° for equal size targets at same range 675 ft. for equal size targets	.85° for equal size targets at same range 150 ft. for equal size targets
Transmitter and Receiver Characteristics		
PEAK POWER DUTY CYCLE AVERAGE POWER	1 megawatts (MW) minimum at 1000 pulses per second (pps) .001 (at 1000 pps) 1000W (60 decibel milliwatts [dBm]) minimum (at 1000 pps)	80 kilowatt (kW) minimum (at 3300 pps) .000792 (at 3300 pps) 63.4W (48 dBm) minimum (at 3300 pps)
RECEIVER SENSITIVITY: Normal Moving Target Indicator (MTI)	-108 dBm minimum -105 dBm minimum	-103 dBm minimum -100 dBm minimum
MTI CANCELLATION: Rigid fixed target Blind speeds	33.5 decibel (dB) minimum Fixed pulse repetition frequency (PRF): 104 knots (kn) Staggered PRF: 832 kn	33.8 dB minimum Fixed PRF: 106 kn Staggered PRF: 848 kn

Now that you know the characteristics, capabilities, and limitations for the AN/MPN–14K, you need to know how the system functionally operates.

606. Functional operation

The equipment contained in the operations trailer and radar trailer performs as a complete ground controlled approach (GCA) and air traffic control center for landing aircraft safely during periods of reduced visibility. The equipment is capable of locating and identifying approaching aircraft. Using this equipment, the air traffic controller can direct these aircraft into an orderly pattern within the immediate approach area, and direct the final phase of the landings. The radar trailer can operate

independently with reduced traffic handling capabilities. This is the autonomous mode of operation; let's start this lesson by discussing the radar set.

AN/MPN–14K radar set

The radar set functionally contains two distinct radar systems (ASR and PAR) and a communications system. These systems are divided into the following groups as described below.

AN/MPN–14K Systems		
Radar (ASR and PAR)	**Radar Identification System**	**Communications**
• Transmitting group (dual-channel) • Antenna group • Receiving group (dual-channel) • Processing group (dual-channel for ASR Only) • Indicator group • Control group	• Interconnecting group • Coder processor group • Transponder	• Very high frequency (VHF) and ultrahigh frequency (UHF) radios (two-way) • Intercommunication • Telephone

The radar set is also provided with three external air-conditioners to heat, cool, dehumidify, filter, and circulate air through the equipment in the trailers. As displayed in figure 2–2, one air-conditioner is used for the operations trailer, and the other two are used for the radar trailer.

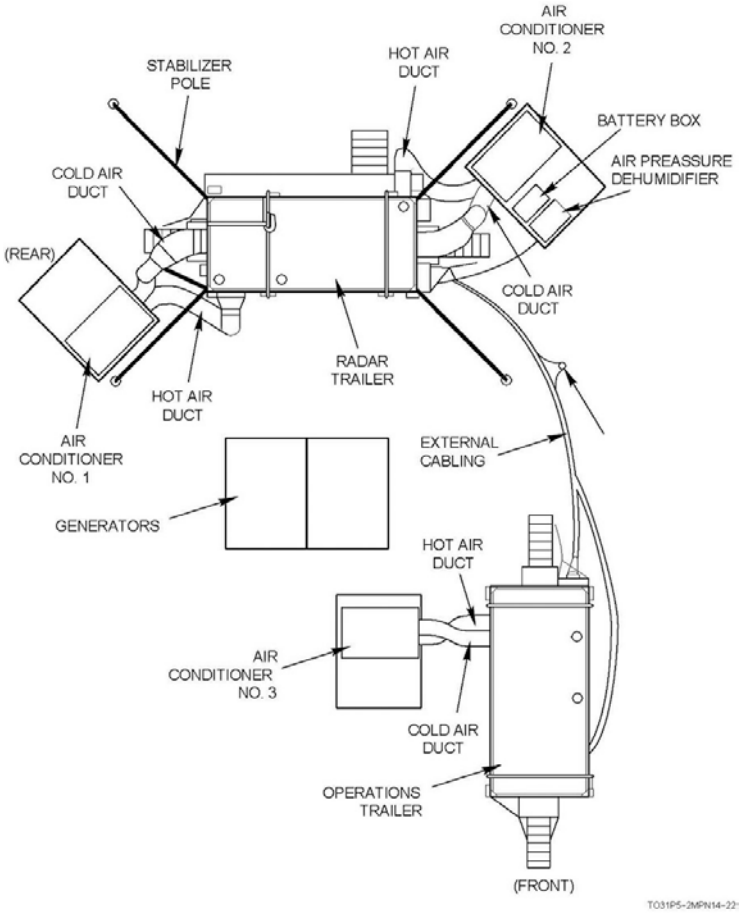

Figure 2–2. AN/MPN–14K layout.

AN/MPN–14K Precision Approach Radar System

The PAR system is divided into five major functions: transmitter, antenna, receiver, processor, and indicator groups.

Transmitter group

The PAR transmitter group consists of two transmitters, cabling, waveguide components, and associated circuits located in bay 4. High voltage from the PAR high-voltage power supply (in bay 8) and triggers from either the PAR processor or the internally generated triggers are used to generate the radio frequency (RF) pulses in the transmitter. A waveguide switch connects one transmitter to the antennas through a circulator and waveguide transmission line, and the other transmitter to the dummy load.

Antenna group

The PAR antenna group couples the RF energy from the transmitter to the antennas and radiates this energy in specific radiation patterns. The antennas then receive reflected RF energy from targets and route it to the receiver. The RF switch blades alternately route the transmitted RF pulses to the azimuth and elevation antennas. These antennas radiate the pulses in a narrow, wedge-shaped beam. The azimuth antenna scans its beam left and right over a 20-degree sector and the elevation antenna scans its beam up and down over an 8-degree area. The width of the antenna waveguide is mechanically varied to produce the scanning. This scanning action is accomplished by changing the phase of energy radiated by a collinear array of dipoles on the antenna, rather than by physical scanning of the antenna arrays. Coupled to each antenna is an angle voltage generator that delivers a voltage to the indicating system, which represents the scan angle of the radiated beams. The antennas may be physically rotated throughout the scan area. Servo data, angle voltage, relay gate, and unblanking gate data is produced and routed to the PAR indicators to provide references for signals generated within the indicators.

Receiver group

Returned RF signals are received by the antennas and routed through the RF switch, waveguide transmission line, circulator, and waveguide switch to the selected receiver. The receiver group, located in bay 3, contains two PAR receivers, a waveguide transfer switch, and the associated waveguides and circuitry. This group establishes the system operating frequency by selection of plug-in crystals. Each receiver provides double down-conversion of received RF and converts it to linear, logarithmic, and phase-detected output video. The receiver also provides the triggers and video for the displays.

Processor group

The PAR processor group contains a processor, associated line filters, and wiring. The processor provides triggers and gates to the PAR system, and processes MTI and integrated video for the indicators. A single processor, located in bay 5, provides single or double cancellation, fixed or staggered PRF operation, and gated MTI/integrates operation. Separate outputs are provided for each receiver and transmitter channel.

Indicator group

The radar trailer PAR indicator and the operations trailer PAR indicator are identical. Trigger, video, control data, and scanning information is provided by the PAR local control indicator for both indicators. The PAR indicator console contains a converter-power supply and an azimuth/elevation range indicator. The converter-power supply provides all the do voltages required by the indicator console and processes the trigger, video, and scanning information. The required signals are provided to the indicator for display purposes. The indicator uses the processor information to provide the required sweeps and video for display purposes. It also provides remote control for certain system functions.

AN/MPN–14K Airport Surveillance Radar System

The overall functions of the ASR system are very similar to those of the PAR system. A second processor is added to provide complete dual-channel operation. The different groups that make up the system are explained below.

Transmitter group

The ASR transmitter group consists of two transmitters, two high-voltage power supplies (HVPS), cabling, waveguide components, and associated circuits located in bays 9, 10, and 11. Triggers from the ASR processor located in bay 12 are used to generate the RF pulses in the transmitter. A waveguide switch connects one transmitter to the antenna via a waveguide transmission line, the rotary coupler in bay 8, and the other transmitter to a dummy load.

Airport surveillance radar antenna group

The ASR antenna group consists of the reflector, a horn-type feed (S-band), a rotating base, an antenna drive, an antenna tilt actuator and potentiometer, a synchro generator, and the polarizer. An L-band IFF antenna is mounted on top of the ASR antenna.

The pulsed energy (transmitter pulse) leaving the flared end of the feedhorn is directed at the ASR antenna reflector. The reflector radiates the energy in the form of a narrow beam. The horizontal width of the beam is 2.2 degrees maximum (MAX) at the half-power point. The ASR antenna radiation pattern extends especially high in the vertical plane, making it possible to display aircraft targets up to 25,000 ft. at a range of 10 to 60 nmi. The antenna radiation may be circularly polarized at the option of the operator to eliminate clutter caused by rain, sleet, or snow. The ASR antenna feedhorn consists of a rigid curved section of waveguide and a flared waveguide termination. The feedhorn also includes the ASR antenna polarizer. The shape and dimensions of the waveguide and feedhorn termination are chosen to give the proper phase relationship between the circularly polarized elements of radiation.

The ASR antenna rotates at a rate of 12 revolutions per minute (rpm) in a clockwise direction. A 1-horse power (hp) motor operating through a reduction gear assembly drives it. A motor-driven actuator, mounted on the rotating base, controls the tilt of the antenna reflector and feedhorn assembly. The antenna may be tilted from 0 to + 10 degrees. A tilt potentiometer is mechanically driven by the tilt actuator. The tilt potentiometer is used with tilt-angle indicating meters located on each ASR indicator to indicate the tilt angle of the ASR antenna. The control circuits for the tilt actuator are routed through the converter assembly so that maintenance personnel can control the tilt angle for optimum radar performance during flight check.

As the ASR antenna rotates, a portion of the radiated energy is reflected by the upper elevation antenna housing during each revolution. To minimize ghost returns caused by the reflected energy, RF radiation absorbers in the form of three fabricated panels are mounted on the side of the housing directly exposed to the ASR antenna beam.

Identify friend or foe/selective identification features group

RF from the interrogator is connected by a coaxial cable to a rotating joint, located below a slipring assembly in bay 8. This rotating joint transfers the RF to the rotating antenna pedestal. A coaxial cable connects the RF energy from the pedestal to the IFF antenna.

Receiver group

The ASR receiver group is functionally identical to the PAR receiver group except for the frequency range and pulse width. In the PAR receiver group, the waveguide switch is located in the receiver cabinet, and the limiters, amplifiers, and filters are located in the individual receivers. In the ASR receiver group, some of these equivalent components are relocated in the ASR equipment cabinet because of space requirements and to minimize noise figure. A narrow-band 60 MHz intermediate frequency (IF) amplifier replaces the power divider and velocity offset second local oscillator of the

PAR receiver. This provides the optimum bandwidth and allows the same IF amplifiers to be used. The delay line in the fast tune constant amplifier is replaced to match the bandwidth.

Processors

The dual ASR processors are located in bay 12 with the ASR receivers and are designed to operate in a dual-channel ASR system. Each processor assembly operates on independent control signals and provides triggers to its respective channel. Communication between the two processors is provided to allow master/slave operation when desired. The ASR processors do not contain an integrate function.

Indicators

One ASR indicator is located in the radar trailer, and three similar indicators are located in the operations trailer.

AN/MPN–14K Communications System

The MAX capability of the AN/MPN–14K Communications System during normal operation requires both radar and OPS trailers. The following are the communications capabilities:

- Eight (8) communications control positions, six in the OPS trailer and two in the radar trailer.
- Request and acknowledge unit (RAU) support on all communications control positions.
- Tower RAU console.
- Telephone and interphone support:
  1. OPS trailer:
     a. One tower and one ground control intercept (GCI) hot line.
     b. Six land lines.
     c. Four private branch exchange (PBX) lines.
     d. One SS-1 line.
  2. Radar trailer:
     Two land lines.
- Radios:
  1. OPS trailer—12 types of radios (4-local and 8-remote).
  2. Radar trailer—6 types of local radios.
- Support 32-channels of analog data to the voice recorder system.
- Intercommunications between all communications positions in radar and OPS trailers.

Six (6) communication displays provide communications facilities for six controller positions in the OPS trailer. The communication displays are designated POS-1 through POS-6, counting from left to right as one faces the equipment. Each communication display provides the controller full access to all radios, intercom, interphone and telephone functions. The ASR and ASR/PAR desks contain headset receptacles where controllers may install their headsets plugs to use in conjunction with the communication display located closest to the receptacles. At the base of the consoles in Bay-3 and Bay-6 are foot switch plugs to allow the push-to-talk (PTT) function via a footswitch.

Operations trailer communications equipment

The OPS trailer communications equipment consists of a PROCOM–2000 communications switching system, six (6) communication displays, an audio communications recorder, two multi-frequency antennas, and radio communications group 3. Radio communications group 3 contains an antenna switching unit, one (1) VHF transmitter, one (1) VHF receiver, three (3) UHF transmitters, and three (3) UHF receivers. The capability exists to select eight additional radios from a remote site.

Operations communications displays

The OPS trailer has six (6) communications displays. These six displays control all functions for intercoms, telephones, radios and the interface for the request/acknowledge (R/A) subsystem. The six (6) positions within the OPS trailer are POS 1, POS 3 (duty), POS 2 (assistant), POS 4, POS 5, and POS 6.

Intercom selector

Intercom select “soft” buttons are available at each communication display. Pressing the left half of the button for the desired circuit will initiate a call.

Intercom circuit between operations trailer positions

Each communication display has buttons to support eight (8) intercom circuits, representing each position in the upgraded system, six for the OPS trailer and two for the radar trailer. When OPS POS 1 operator selects the intercom selector for OPS INT 6, both controllers will hear a chime in their headsets. The controller at OPS POS 6 will also see a flashing selector button for OPS POS 6.

When the controller at OPS POS 6 presses the OPS POS 6 button, two-way communication will be established. Normal conversation can take place without the use of a PTT switch since all PROCOM–2000 intercom circuits are configured as hot mics. Once the conversation is complete, either party may terminate the call by pressing the left half of the active intercom button.

Radar trailer communications equipment

The radar trailer communications equipment consists of a PROCOM–2000 switching system, two (2) communication displays, radio group 1, radio group 2, a UPS +28 volts, direct current (VDC) power supply, and two multi-frequency antennas. Radio group 1 is located in lower bay 13. This group contains one AN/GRC–211 VHF transceiver, one AN/GRT–21 VHF transmitter, one AN/GRT–22 UHF transmitter, one AN/GRR–23 VHF receiver, one AN/GRR–24 UHF receiver, and one antenna switching unit. The ASR synchro control indicator for the local and remote ASR indicators is also located in this group. Radio group 2 is located in upper bay 16. This group contains one AN/GRC–171 UHF transceiver, two AN/GRT–22 UHF transmitters, two AN/GRR–24 UHF receivers, and an antenna switching unit.

Radar communications displays

The radar trailer has two (2) communications displays. These two displays control all functions for intercoms, telephones, radios, and the interface for the R/A subsystem. A PTT hand switch and footswitch are provided at each position for transmitter keying.

Intercom circuit between operations trailer and radar trailer

Intercom select “soft” buttons are available at each communication display. Pressing the left half of the button for the desired circuit will initiate a call. When POS 1 (OPS) presses RDR INT 7 the intercom selector for POS 7 (RADAR), both controllers will hear a ringing in their headset. The controller at POS 7 will also see a flashing selector button for POS 7.

When POS 7 presses the selector, two-way intercom communication will be established. Normal conversation can take place without use of a PTT switch since all PROCOM–2000 intercoms are configured as hot mics. Once the conversation is complete, either party can terminate the call by pressing the left half of the active intercom button. Any position within the AN/MPN–14K system can place an intercom call to any other position.

Self-Test Questions

After you complete these questions, you may check your answers at the end of the unit.

605. General operating characteristics

1. What two components make up the AN/MPN–14K LCC?

2. What is the MAX distance the operations and radar trailers can be separated?

3. Within a radius of how many nautical miles can each ASR indicating position display the radar and video mapper data required to locate and observe aircraft?

4. When using IFF equipment, each ASR indicating position can display the radar and video mapper data required to locate and observe aircraft within a radius of how many nautical miles?

5. What indicating position displays the radar data required for the control of aircraft on a final approach to the runway?

606. Functional operation

1. What kind of operation is used when the radar trailer operates independently with reduced traffic handling capabilities?

2. How many air conditioners are used with the AN/MPN–14K?

3. Name the five major functions of the AN/MPN–14K Precision Approach Radar System.

4. How is the scanning action of the antenna waveguide accomplished?

5. What equipment is included in the AN/MPN–14K Precision Approach Radar receiver group?

6. What is added to the AN/MPN–14K Airport Surveillance Radar System to provide complete dual-channel operation?

7. Up to what height, does the ASR antenna radiation pattern extend high in the vertical plane, making it possible to display aircraft targets?

8. The MAX capability of the AN/MPN–14K Communications System utilizes how many communication control positions?

9. What does the radar trailer communications equipment consist of?

2–2. AN/TPN–19 Landing Control Central

There are many functional similarities between the AN/MPN–14K and the AN/TPN–19 LCC. While the AN/MPN–14K is mostly used in support of Air National Guard operations, the AN/TPN–19 is used by regular AF agencies and components. It consists of three main components, ASR, PAR, and an operations section.

607. System purpose and description

Overview of the AN/TPN–19 LCC starts with the systems overall purpose and description. This gives you the big picture before breaking it down into its individual components. This lesson starts by discussing the purpose of the AN/TPN–19.

Purpose

The AN/TPN–19 LCC (fig. 2–3) consists of an ASR used to locate aircraft near the terminal. This permits air traffic controllers the ability to direct these aircraft into proper traffic patterns. The LCC also contains a PAR, which provides for location and tracking of aircraft during landing activities. In addition, two operations shelters contain the necessary radar display consoles, radio communications for controller-to-pilot communications, and all other supporting equipment required.

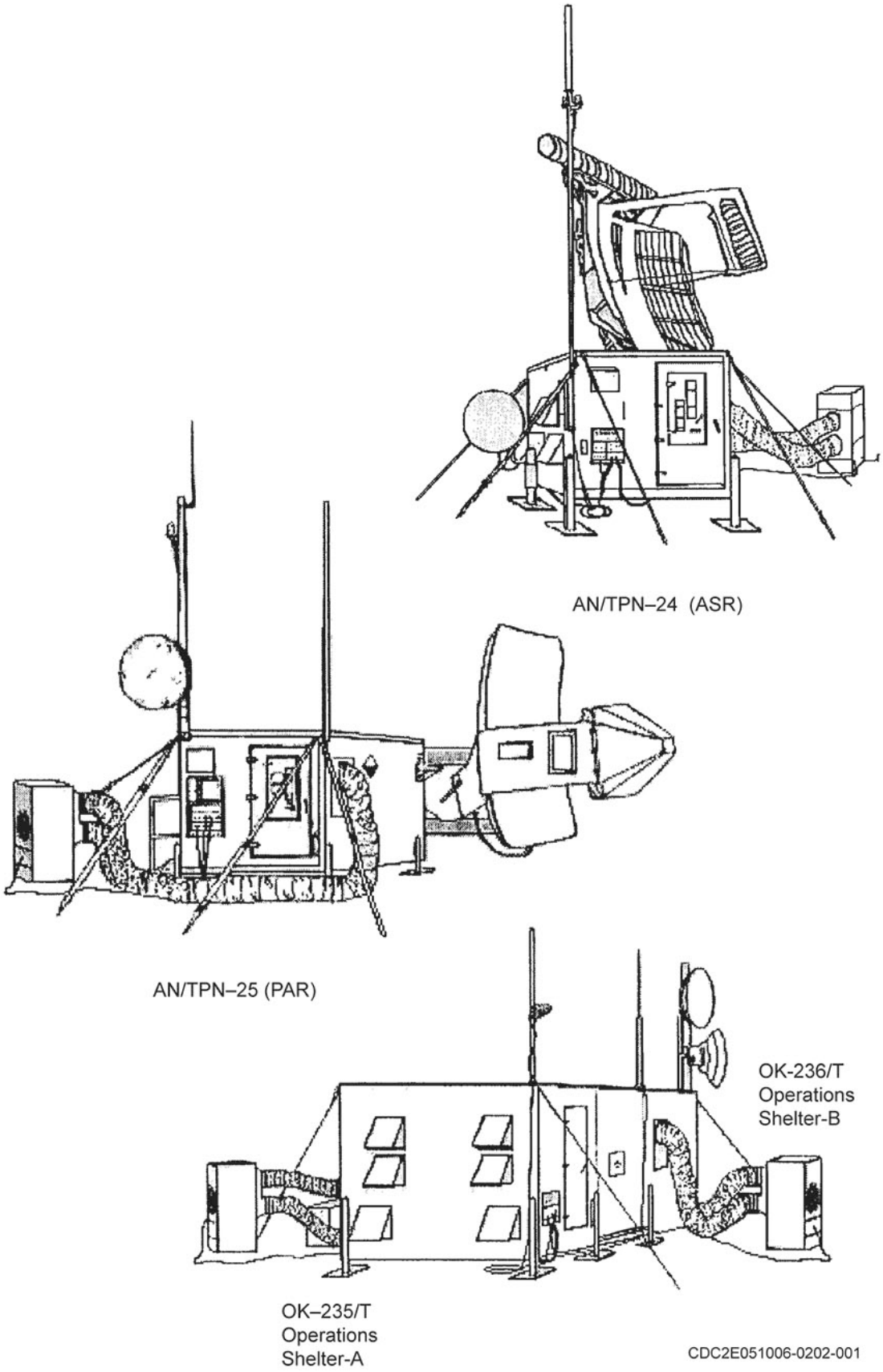

Figure 2–3. AN/TPN–19 Landing Control Central.

Description

The LCC is an extremely versatile radar system, which you can deploy in either of two configurations. The first configuration makes use of a single operations shelter referred to as operations A (OPS A) communications control group (OK–235/T) and is used for GCA. In this configuration, the shelter contains equipment for radar display, communications, and remote control of the AN/TPN–24 ASR, and the AN/TPN–25 PAR. The second configuration is a combination of the OK–235/T and the operations B (OPS B) communications control group (OK–236/T). When configured in this manner, the LCC is a RAPCON, pictured at the bottom of figure 2–3. The RAPCON configuration provides more controller space and mapper configuration capability. In both configurations, the decision can be made to separate the radar from the operations shelter by up to 10 miles, which significantly reduces injury and death of personnel in times of conflict.

Like the AN/TPS–75 radar set, the AN/TPN–19 LCC is transportable and therefore, must be moved and set up at different locations. Because of this, there are certain siting requirements that the next few lessons will explain the functional operation of the two radar systems of the AN/TPN–19 LCC, which are the AN/TPN–24 ASR and the AN/TPN–25 PAR.

608. AN/TPN–24 Airport Surveillance Radar

The ASR shelter provides detection, identification, and control of aircraft to support tactical ATC operations. The ASR shelter contains a *primary* air search radar and a *secondary* Air Traffic Control Radar Beacon System (ATCRBS) AN/TPX–42A, plus ancillary communications equipment. These two systems complement each other to provide search radar information indicating the location and identity of aircraft near the airport. The search radar has a range of 60 nmi covering altitudes between 1,000 and 40,000 ft. for the entire 360 degrees in azimuth. The beacon system has a range of 200 nmi and it synchronizes with the search radar to provide data on aircraft that are equipped to respond to the ATCRBS interrogations. The primary and secondary radar information from the ASR shelter goes to the operations shelter. Ground approach operators use this data to direct air traffic control operations. The ASR shelter can also operate autonomously. To accomplish this, the shelter is equipped with display equipment, radios, and local landline terminal communications similar to the equipment in OPS. This lesson begins by discussing the shelter weight and setup time.

Shelter weight and setup time

The shelter has a total system weight of approximately 15,000 pounds. It takes roughly 12 hours to deploy, set up, align, and make the system operational. However, setup time may take longer due to personnel or equipment limitations caused by severe climatic conditions. The weight and setup times may not seem important to you now, but they definitely come into play when you pack up and transport the system to another corner of the world.

Capabilities and limitations

The AN/TPN–24 ASR provides 360 degrees of coverage in azimuth, with a vertical coverage pattern from 1,000 ft. at 12 nmi, angling up to 40,000 ft. at 60 nmi. The antenna rotates between 13 and 16 revolutions per minute depending on whether 50 or 60 Hz power is applied. The radar also possesses the capability of remoting signals produced to other shelters. If you are remoting signals via coaxial cable, the distances between the shelters needs to be 100 ft. or less. If possible, you should use fiber optic cable for remoting, but the separation distance must be less than 2.1 miles. With the use of a microwave link (antenna) the distance is significantly greater. The MAX line-of-site using a microwave link is 10 nmi. When setting up the system, you need to consider siting requirements. The slope of the terrain on the airfield needs to be between zero and six percent. Additionally, the distance between the ASR shelter and OPS shelter need to be within 100 ft. or up to 10 nmi, dependent upon how you remote the information.

Finally, you cannot bring up the capabilities and limitations without mentioning the RF signal characteristics. The transmit frequency is between 2.7–2.9 gigahertz (GHz). The average power

output is a minimum 948 watts (W) with both transmitters firing. It is important to note that when both transmitters are firing, there is a frequency separation of 93 ± 7.0 MHz between the channels. This value, however, is different dependent upon which waveguide is used.

Shelter layout

Before looking at the overall system operation, first you need to get an idea of where the equipment is located within the ASR shelter (fig. 2–4). The table that follows lists the reference designators for the AN/TPN–24 components. The “2” in the first part of the reference designators designates the AN/TPN–24 ASR portions of the AN/TPN–19. The second part of the reference designators matches the labels in figure 2–4. For example, in the drawing “A13” is the display, and in the table “2A13” denotes the display—2=ASR and A13=display.

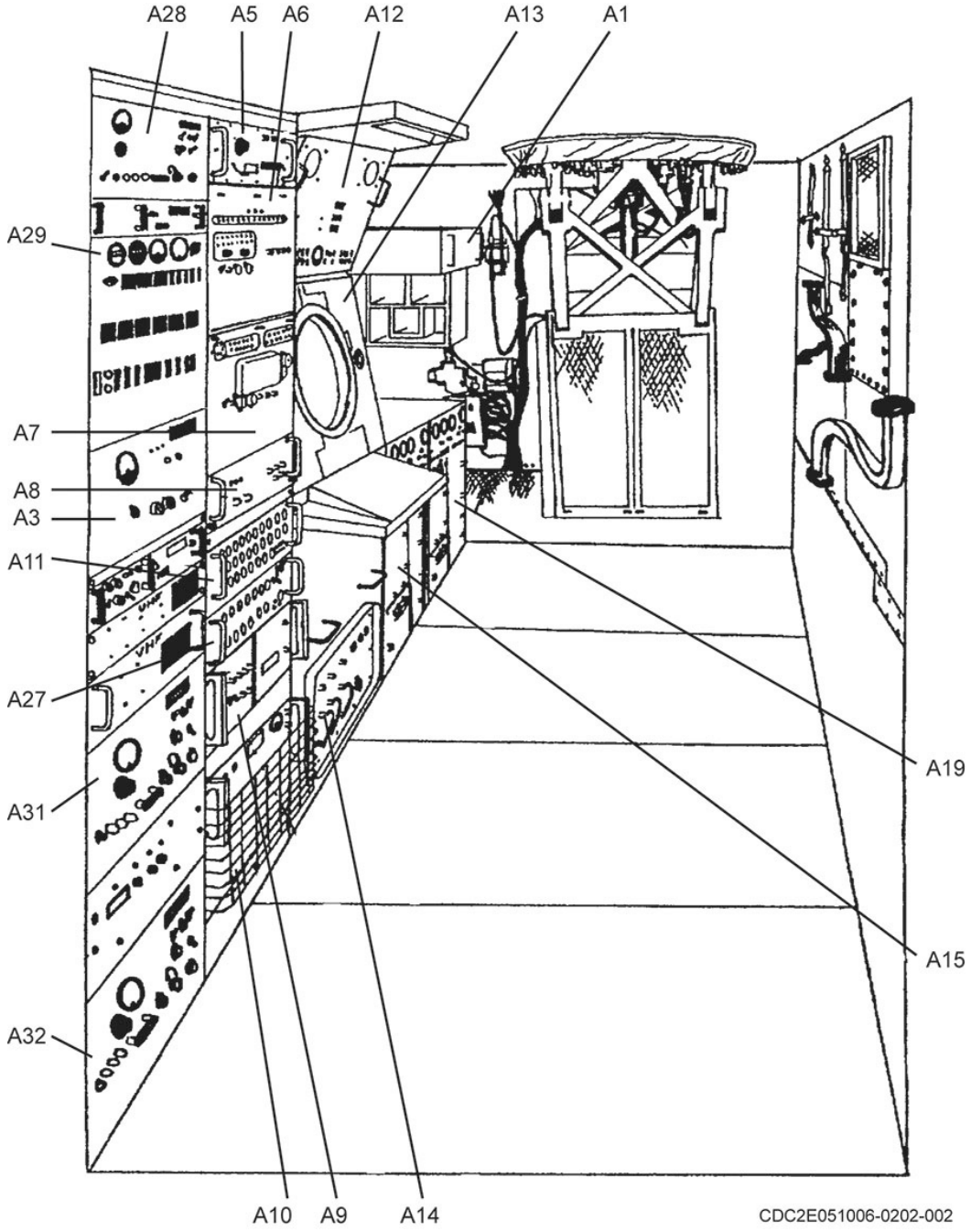

Figure 2–4. ASR shelter equipment location.

AN/TPN–24 ASR COMPONENTS REFERENCE DESIGNATORS			
Reference Designator	**Common Name**	**Reference Designator**	**Common Name**
2	ASR shelter	2A12	Radar set control
2A1	Video synchronizer	2A13	Display
2A3	Signal distribution panel	2A14	Radar data transfer group
2A5	Signal data converter	2A15, 2A19	ASR receiver-transmitter
2A7	Video processor	2A27	Power supply, 28 VDC
2A8	Defruiter	2A28	VHF radio
2A9	Sync-coder	2A29	Power distribution panel
2A10	Interconnecting group	2A31	UHF radio-RX-TX

AN/TPN–24 Airport Surveillance Radar functional operation

The ASR is an airport terminal area surveillance radar that consists of two identical pulsed radar transmitter-receiver channels combined through a diplexer and operated through a single ASR antenna (fig. 2–5). The ASR antenna rotates at a constant rate in azimuth and is set at an adjustable, but constant elevation angle to scan the airport terminal area through 360 degrees. The antenna provides a narrow pencil beam in azimuth and a fan-shaped beam in elevation. This provides radar video for displaying the range and azimuth of aircraft within the 60-mile range and 40,000 foot altitude limitations established by the radar beam. Here we will go over the ASR shelter block diagram and briefly explain the functional operation of the system.

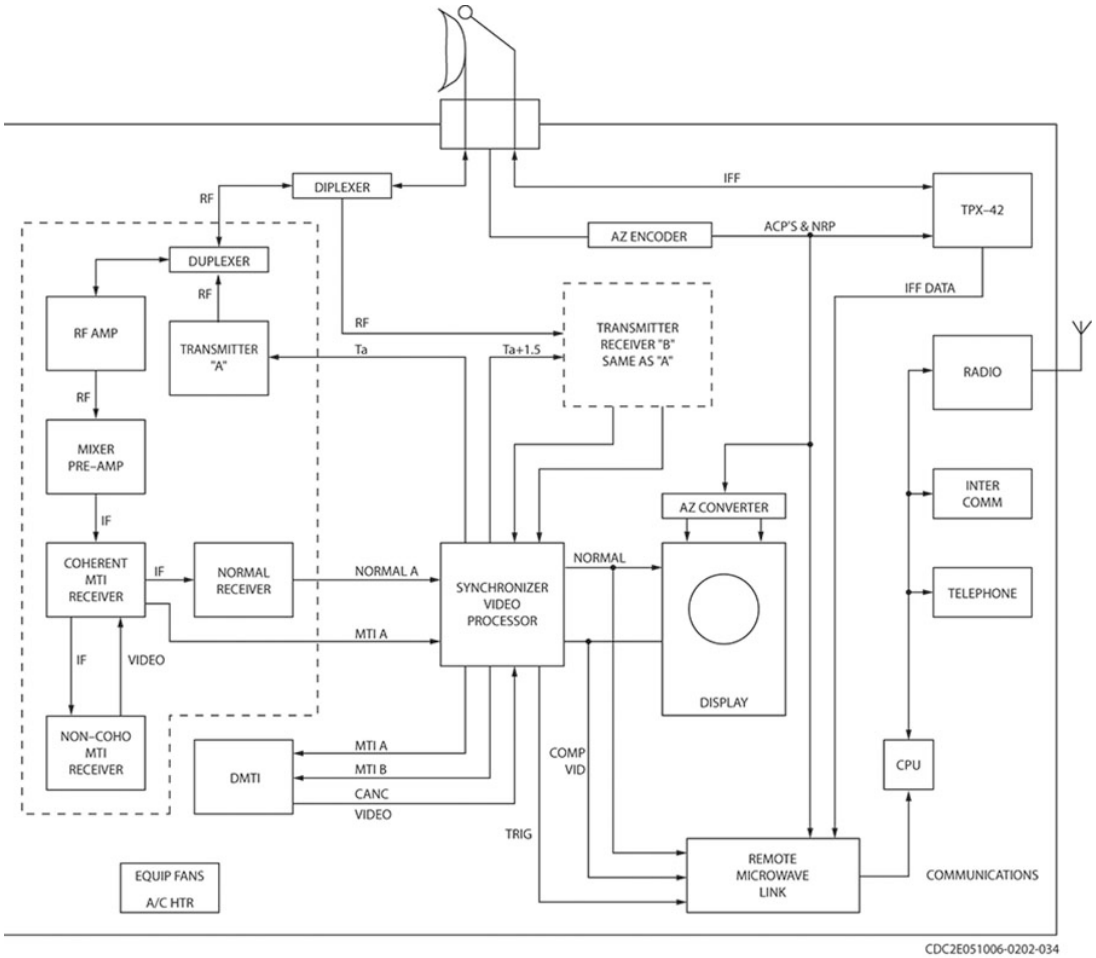

Figure 2–5. ASR Shelter block diagram.

Transmitter A and B

The transmitter section of each unit produces 1 µs RF pulses with a peak power output of 450 kW minimum. The transmitter generates these pulses at an average rate of 1050 pps in the frequency range of 2.7 to 2.9 GHz. The output characteristics of each unit are identical; however, the diplexer maintains a separation of 53 to 108 MHz between the two transmitters during operation. In addition, timing of the pulses is arranged so that each of the two units produces the transmitted pulses at alternating intervals. Each transmitter is capable of operating as a single unit.

Transmitter operation

The transmitter system operates from a prime power source of 208 volts, 3-phase power at 50 or 60 Hz. The pre-regulator and high-voltage power supply converts this power to a regulated 8.0 kilovolt (kV). The modulator and post regulator circuits use this voltage to provide a high-voltage pulse of sufficient magnitude (–27.5 kV) to fire the magnetron each time the synchronizer-video processor supplies a trigger. The magnetron is the RF oscillator that produces the high-power RF pulse burst for radar transmission. The post regulator provides regulation of the voltage that fires the magnetron to keep the magnetron pulse voltage constant on a pulse-to-pulse basis. This keeps the magnetron frequency constant, which is required for proper operation of the MTI circuits in the ASR receiver. Included within the ASR transmitter are monitor and control circuits. These circuits detect transmitter circuit faults, monitor certain critical parameters, and provide switching of the transmitter mode of operation (standby or radiate) during maintenance operations. The ASR radar set control, located in the OPS shelter, controls the mode selection for the transmitter during normal operation.

Dual-frequency diversity

The ASR system employs a dual-frequency diversity system. This means both channels (two transmitters and receivers) operate simultaneously at different frequencies, while sharing the same antenna. Frequency diversity operation improves the detection capabilities of the radar. The two radar channels operate at different frequencies and the transmitters turn ON alternately. “A” channel always transmits its 1.0 µs pulse, 1.5 µs prior to “B” channel. Each operates on one of 12 different PRFs. The AN/TPN–24 uses 12 different PRFs for a staggered operation. The staggered PRFs prevent the occurrence of blind speeds below 1,100 knots.

Since both transmitters operate at the same PRF, no transmitted pulse overlap occurs. The output RF energy from the transmitters is connected to the ASR antenna via a diplexer. The diplexer is a microwave device that permits RF pulse operation of two radar channels at separated frequencies and it is tunable with three different external sections that permit 53, 73, 93, and 108 MHz separations. The diplexer separates received RF energy into two separate paths distinguished by frequency. The frequency dependent diplexer then routes the correct frequency to each channel and eliminates any other frequency. Hence, although it uses a common antenna for two radar channels, there is no mutual interference.

Receiver A and B

Each radar receiver (fig. 2–5) consists of an RF amplifier (AMP), a mixer, and three separate receivers: normal, coherent MTI, and noncoherent MTI.

Radio frequency amplifier and mixer

The RF amplifier provides a minimum of 15 dB of gain to the target returns that it received from the antenna system. It passes the amplified returns to the mixer, which converts the received RF to IF by mixing a sample of the magnetron RF pulse burst with a signal supplied by a stable local oscillator (STALO). The resulting 74 MHz IF targets go to the receivers.

Coherent moving target indicator receiver

The coherent MTI receiver compares the phase of the IF signals obtained from the radar echo produced by each transmitter pulse burst with an IF reference signal. If the target producing the radar

echo is moving, the Doppler effect causes the IF signal phase of the radar echoes to change continuously from one radar echo to the next, as compared with the reference IF signal. The coherent MTI receiver detects the phase difference between the radar echoes and the reference signal for each transmitter pulse burst. It then produces a bipolar output signal, which goes to the signal data converter unit for further processing.

Noncoherent moving target indicator receiver

The coherent MTI receiver is not effective against rain or chaff, since both of these types of interference produce radar reflections exhibiting a wide range of phase variances. Radar echoes from this type of clutter appear like a high noise level in the coherent receiver. In the presence of such conditions, operators switch to the bipolar signal produced by the non-coherent MTI receiver in place of the coherent MTI bipolar signal.

The non-coherent receiver operates by a phase comparison technique much like that of the coherent receiver, except the reference signal for the phase comparator is not coherent with the transmitted pulse burst. The reference signal comes from the clutter itself, thus the receiver is termed a non-coherent MTI receiver. It discriminates between moving aircraft and stationary or relatively slow-moving clutter such as rain. The reference for the receiver is not phase locked to the transmitted RF pulse burst.

Normal receiver

The normal receiver is a narrowband, high gain radar receiver that is effective in detecting targets either in a relatively clutter-free environment or in the presence of wideband noise interference. Video output of this receiver, termed normal video, is one of the videos available for display on the PPI. A normal receiver can operate in either the wideband limiting mode or the linear mode. The wideband-limiting mode is effective in maintaining good distinction between aircraft and wideband noise, whether the noise is a result of receiver front-end (RF section) noise or external wideband noise jamming or similar interference. The wideband-limiting mode provides a constant false alarm rate (CFAR) operation, which holds the noise level constant to avoid the possibility of confusing noise level transients with an aircraft. Linear mode provides a small increase in sensitivity for the receiver and is of value in obtaining somewhat strengthened radar echoes from small far-off targets that might not be clearly visible in the limiting mode.

Synchronizer-video signal processor

The synchronizer-video signal processor (fig. 2–5) performs the following three major functions that are largely independent:

1. Operates in conjunction with the signal data converter to process receiver video for display and for transmission via the radar data transfer group.
2. Synchronizes and distributes radar trigger pulses to the subsystems of the ASR radar system.
3. Controls ASR antenna beam lobing.

In addition, the synchronizer-video signal processor detects antenna rotation and the occurrence of fault conditions in the synchronizer and beam lobing functions. Rotation status and fault conditions display on front panel indicator lamps at the radar set control (RSC).

Azimuth converter

The azimuth converter (fig. 2–5) processes the ASR antenna position triggers; azimuth-runway angle data, AN/TPX–42A data, and the runway offset information. The display subsystem uses this information to display and synchronize the information provided. The processing operations include format modifications, range scaling, and multiplexing. The resultant outputs go to the display subsystem in serial form.

Display subsystem

The display is identical to the ones used in OPS. There is no means available to get PAR video into the ASR shelter. You will normally use this indicator as a maintenance scope to troubleshoot and align the ASR system, unless operators are using the shelter in autonomous mode to control aircraft.

Antenna system

The AN/TPN–24 ASR antenna is a parabolic antenna that uses multiple feed horns to develop the desired radiated beam pattern. The shape of the parabolic reflector provides the desired narrow pencil beam in azimuth. The shape of the transmitted beam in elevation, however, is mainly determined by the use of a linear vertical array comprised of 12 individual feed horns each fed by a separate waveguide. The physical arrangement of the horns constitutes a line feed that illuminates the antenna reflector to create the fan-shaped vertical beam.

Communication

The communications subsystem contains UHF and VHF radio equipment and telephone equipment. For normal LCC deployment, controllers conduct the ground-controlled approach operations solely within OPSs. In this case, personnel do not use the telephone and intercom subsystem in the ASR shelter, except possibly during maintenance activities. The radios, however, operate remotely to increase the radio coverage available at OPS. In particular, the guard receivers for the LCC are contained in the ASR shelter. In addition, operators (controllers) may need the communications equipment in case of autonomous operation of the ASR shelter. Station an operator(s) in the ASR shelter when in autonomous operation.

The operator would use the UHF and/or VHF radios to communicate with the aircraft as related to the GCA activities. The telephone equipment permits telephone communication over telephone landlines between the ASR shelter and the 407L electronic central telephone switching office and/or other facilities. Typical telephone line communications would be to weather stations, control towers, base operations, and other similar areas. The third communications link is the intercom system. This system permits voice communication by means of either landlines or the radio microwave data link between the ASR shelter and OPS (and to the PAR shelter). You can operate the UHF and VHF radios in the ASR shelter remotely from OPS during normal GCA operations. This allows the ASR shelter microwave radios to supplement those in OPS to provide additional operational capability of more radios for communication between the ground controllers and aircraft. It also extends the range of coverage resulting from the siting of the ASR shelter in clearer areas than OPS.

Remote data link equipment

Remote microwave data link equipment, shown in figure 2–5, provides microwave data and intercom links between the ASR shelter and OPS. This microwave link consists of multiplexing and demultiplexing equipment, a microwave radio transmitter, and a radio receiver. The data transferred consists of the radar video display and timing data from the search radar, the video and digital aircraft data from the ATCRBS interrogator set, the voice communication data from the intercom equipment, and various control signals.

The control signals involve a variety of mode control commands from OPS involving control of the UHF and VHF radios for communication to aircraft, ASR radar-mode and operation control, and ATCRBS mode and operation control. Simultaneous transmission and reception between the two shelters can occur. Because of the large number of signals, the remoted data link equipment multiplexes them before sending the signals to the radio transmitter for radiation from a microwave disk antenna mounted on the shelter. The received microwave signal goes from the antenna to the radio receiver and then demultiplexed to separate the signals into their original forms for use within the shelter.

Shelter fault indications

The radar set control of the control-indicator group contains several FAULT and OVER TEMP indicator lamps that illuminate when any of the equipment that contain fault detection circuits, senses a corresponding fault condition. The RSC circuits do not perform any actual fault detection processes. Any equipment in the shelter that provides a fault condition indication supplies an input to the radar set control for display. Fault conditions illuminate the corresponding FAULT lamp. The fault (and over temperature) indications are provided as a general warning to operation personnel of a fault condition somewhere in the ASR equipment. You cannot accomplish fault localization from these fault indications. Further investigation at the individual equipment is necessary to establish the source of the fault condition.

609. AN/TPN–25 Precision Approach Radar

With a few exceptions, the AN/GPN–22 PAR that you learned in technical training and the AN/TPN–25 are identical radars that serve the same purpose. The PAR shelter provides accurate navigational information to the GCA operators, which is required to guide an aircraft to a safe GCA landing during inclement weather conditions. The information displayed includes course line, glide slope, range, decision height, safety zone, and approach history over a three-minute interval. The PAR operators normally reside in OPS. To permit autonomous operation of the PAR shelter, one VHF and two UHF radios provide the required voice communication between the GCA operator and the approaching aircraft. Let’s start this lesson starts by looking at the deployment particulars, and the layout of the AN/TPN–25 PAR shelter.

System weights and set up time

Due to upgrades, the antenna can now fit inside of the shelter. This allows for only one package during transit configuration. The total system weight during transport is 15,000 pounds. It takes roughly 12 hours to deploy, set up, align, and make the system operational. However, setup time may take longer due to personnel or equipment limitations under severe climatic conditions. You can transport this system by 5-ton M-series truck, M1022A1 mobilizer, helicopter, or by transport aircraft (C-130, C-141B, C-5 and C-17).

Capabilities and limitations

The AN/TPN–25 provides 20 degrees of coverage in azimuth with selectable elevation coverage of 7 or 14 degrees. You can change the service volume coverage to any of four intersecting runways without physically moving the shelter as seen in figure 2–6.

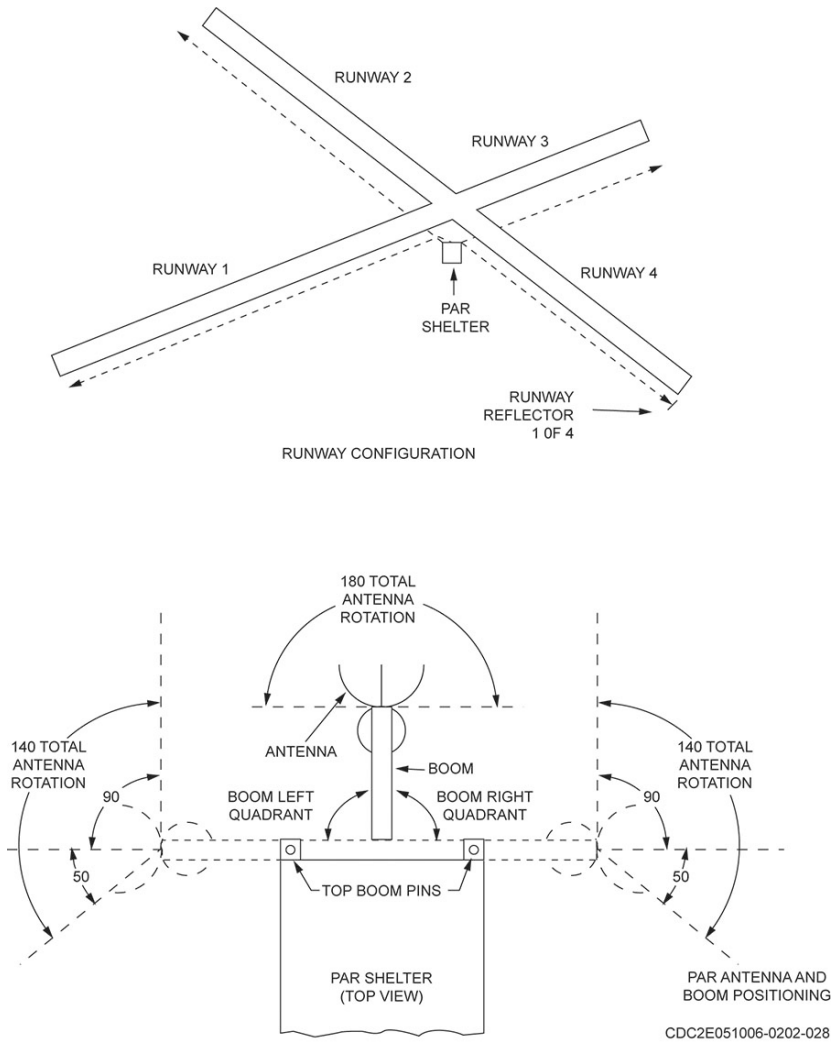

Figure 2–6. PAR runway coverage.

The PAR can process the range, elevation, and azimuth positions of up to six tracked targets and scan targets within the PAR service area to update at rates determined by the mode of operation. The system updates scan data at rates from 0.5 times per second to 2 times per second, and it updates track data at rates of 22 times per second or 18.7 times per second.

The ASR sections covered earlier discussed azimuth and range resolution, but the PAR has a far different mission. The most important aspect of the PAR is the need to have accurate elevation and azimuth information to guide the aircraft in for a safe landing. The following table makes it easier to understand the accuracy of the system.

PAR ELEVATION AND AZIMUTH INFORMATION			
Elevation		**Azimuth**	
Accuracy	***Target Range***	***Accuracy***	***Target Range***
5 ft.	4,000 ft.	10 ft.	4,000 ft.
6.5 ft.	5,000 ft.	12 ft.	5,000 ft.
8 ft.	6,000 ft.	15 ft.	6,000 ft.
10 ft.	7,650 ft.	20 ft.	7,650 ft.
20 ft.	10,000 ft.	30 ft.	10,000 ft.

Like the ASR, the PAR also has remoting capability with the use of a microwave link that operates in the frequency band of 7.125 GHz to 8.4 GHz or 14.4 GHz to 15.25 GHz with the use of a special frequency kit. The MAX separation of the PAR to the OPS shelter is 10 nmi when operating in the lower frequency band and 4.3 nmi when operating in the higher band. Use a coaxial cable when the separation between the PAR and OPS shelter is less than 100 ft. or fiber optic cable up to 2.1 miles.

The AN/TPN–25 PAR transmits a 1.0 ±10 percent μs pulse, operates in a frequency range between 9.0 to 9.2 GHz, and does this with a nominal peak power 12.5 kW. It is also important to note the pulse repetition rate is 3134 pps average at the 20-nmi range and 3711 pps average at the 10- to 15-nmi range.

Shelter layout

As with the ASR, the AN/TPN–25 PAR may deploy with the AN/TPN–19 LCC, or deploy autonomously to support precision landing systems. The AN/TPN–25 PAR is a tactical version of the AN/GPN–22 PAR, so the interior portion of the shelters looks similar, as seen in figure 2–7. The table that follows lists the reference designators for the AN/TPN–25 components. Notice the “1” in the first part of the reference designators designates the PAR portion of the AN/TPN–19. The second part of the reference designators matches the labels in figure. 2–4. For example, in the drawing, “A12” is the display, and in the table, “1A12” denotes the display.

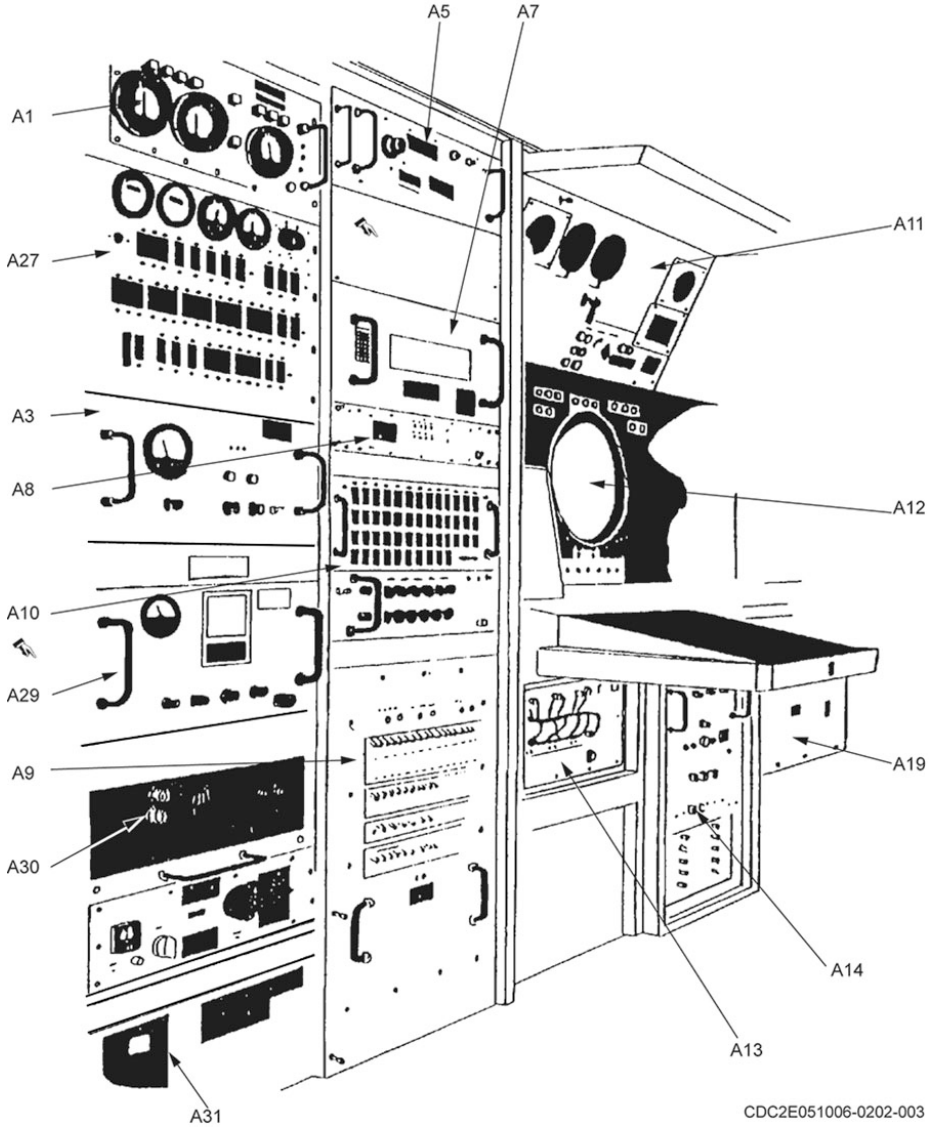

Figure 2–7. AN/TPN–25 PAR shelter equipment location.

AN/TPN–25 PAR COMPONENTS REFERENCE DESIGNATOR			
Reference Designator	**Common Name**	**Reference Designator**	**Common Name**
1	PAR shelter	1A11	Radar set control
1A1	Antenna position control	1A12	Indicator group control
1A3	Communications control panel	1A13	Radar data transfer group
1A5	PAR Signal Data Converter	1A14	Radar target data processor
1A7	Target data computer (TDC)	1A19	PAR transmitter
1A8	Not used	1A27	Power distribution panel
1A9	Antenna beam position control unit	1A29/1A30	Receiver transmitter radio
1A10	Multi-voltage Power Supply	1A31	Not used

AN/TPN–25 Precision Approach Radar functional operation

As previously stated, the AN/TPN–25 PAR is a tactical version of the AN/GPN–22 PAR. Here we take a brief look at the transmit/receive signal flow and radar beam formation.

Overall transmit/receive signal flow

Foldout 1 (FO–1) shows the basic block diagram of the PAR shelter. The frequency generator subsystem within each receiver exciter can produce two different RF pulse waveforms. They produce a chirped 1.0 µs RF waveform (XMTR DRIVE) when in the acquisition or track mode of operation, and in the scan mode of operation they produce a waveform that is composed of two sets of continuous wave (CW) VHF frequencies. These waveforms go to transmitter 1A19 or 1A20. The transmitter multiplies the frequency by a factor of 48 to X-band and pulses the RF waveform for transmission by the antenna. Critical timing relationship exists between the generation of the RF waveform for the transmitter and turn-on of the transmitter traveling wave tubes (TWT). Each transmitted pulse waveform is precisely 1.0 µs in width. In the scan mode, the two sets of CW RF waveforms applied to the transmitter from the frequency generator circuits combine to form the 1.0 µs RF pulse. The result is a split frequency interval with two 0.5 µs pulse waveforms of different frequency within the same 1.0 µs RF pulse. The TWT must trigger “ON” to place a window around the frequency transition point. This window, known as the grid clamp pulse, turns on the TWT for 1.35 µs at the precise time the 1.0 µs RF pulse is present in the tube. The PRF trigger is the source trigger used to perform these timing functions. The PRF trigger comes from the same clock in the reference generator from which all transmit and receive circuit reference frequencies are generated. This provides timing synchronization.

The power amplified 1.0 µs RF pulse waveform from the transmitter travels to the high power duplexer (also termed the high power circulator) in the sum channel of the receiver front-end circuits. These circuits are in the microwave component assembly. The duplexer directs the energy from the transmitter through a directional coupler to the antenna comparator and feed-horn assembly. The monopulse feedhorn assembly radiates the RF energy through the phased array. The phased array forms and directs a beam into the main reflector, using it as a reflecting and focusing surface (fig. 2–8). The horn assembly radiates the RF energy in a horizontal linear pattern. The phased array phase shifter elements convert this polarization to a left-hand circular polarization pattern. Symmetrical targets, such as raindrops, reflect the radiated pattern as a right-hand polarization pattern for the returned radar echoes. The phase shifters of the phased array convert right-hand circularly polarized energy to vertical polarized energy. An internal resistor absorbs energy with this polarization. Therefore, there is a significant reduction in the signal level of raindrops or other symmetrical objects. Aircraft, of course, are not symmetrical objects.

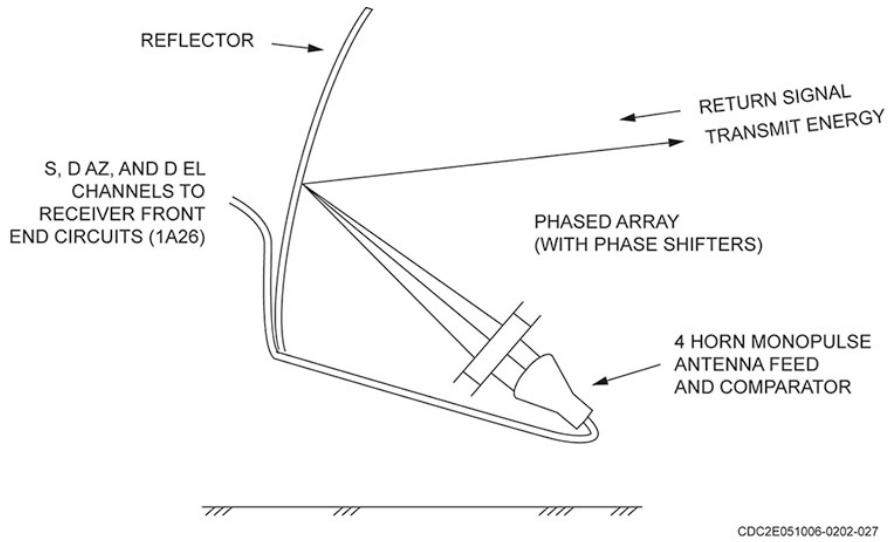

Figure 2–8. Antenna functional representation.

Radar beam formation

The received microwave energy bounces off the main reflector, through the phased array, and into the antenna feedhorn assembly. The horn assembly is sensitive to off-phase center displacements of the target. The antenna contains a monopulse comparator that produces outputs for the sum ($\sum$), azimuth error (ΔAZ), and elevation error (ΔEL) channels of the receiver circuits.

A fixed phased array antenna controls the position of the radar beam. In a phased array antenna, the radar beam is formed through the reinforcement of nodes and antinodes in the RF energy waves originating from adjacent elements in the array (fig. 2–9, A). If each element in the array radiates in the same phase, the RF energy wave node and antinode reinforcements occur along a line that is perpendicular to the array plane. Under these conditions, the beam will be at the boresight position.

If, the radiation from each successive element shifts in phase along a given direction across the face of the array (fig. 2–9, B), the lines of node and antinode reinforcement will be rotated away from the array plane perpendicular. Under these conditions, the beam deflects from the boresight position in a direction corresponding to the phase shift. The amount that the beam direction rotates from the array perpendicular is dependent upon the amount of phase shift applied to adjacent elements.

In the example given above, phase array beam steering is for a single direction sense. However, if the phased array antenna is arranged in a two-dimension matrix; as is the case with the radiating elements of the antenna, a second set of phase shifts can be applied to the array elements in a direction perpendicular to the first. With such an arrangement, the antenna beam can be steered in any direction away from the boresight line by applying the proper combination of phase shifts to their individual array elements.

The three channels of received RF energy are down-converted in the receiver front-end circuits to UHF IF signals. There are two separate sum channel outputs. One is the input to the scan receiver circuits in the receiver-processor 1A14. The other sum channel output, and the ΔAZ and ΔEL channel outputs, is the inputs to the track receiver circuits (angle and range track) in the receiver-processor. The receiver front-end circuits contain the sensitivity time control (STC) circuits, which apply signal attenuation to close-in target echoes.

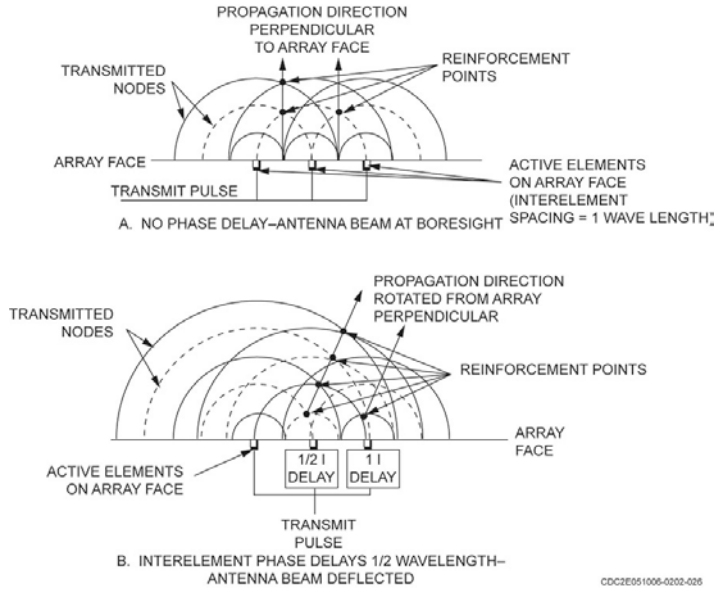

Figure 2–9. Phased array beam pointing function.

The search (scan) and track receiver circuits in receiver-processor 1A14 operate independently of each other. There are two separate but identical search (scan) receivers in the 1A14. Each receives a different local oscillator signal from the frequency generator group. Each local oscillator signal relates to one of the two 0.5 μs transmitted pulses so that one of the scan receivers accepts radar echoes produced by one of the transmitted pulses, while the other scan receiver only accepts radar echoes produced by the other transmitted pulse. The two channels of video information are summed in digital moving target indicator (DMTI) 1A5 to create a single channel of real-time video for display.

Each search (scan) receiver consists of MTI and normal receiver circuits that produce the real-time target video for further processing and display. This processing is performed in DMTI 1A5. The DMTI receives the video from the MTI receiver circuits and processes it to minimize signals from stationary or slow moving objects, thus reducing the clutter background from the displayed video.

The processing of the normal video by the DMTI involves integration of the video to strengthen its signal level. The DMTI performs range gating where the real-time scan video output consists of MTI video out to a selectable range and normal video at the far range. The radar set control (either 1A11 or the RSC in the OPS) controls this gating. The resulting scan video goes to the display in the PAR shelter and to the radar data transfer group for transfer to the display in the OPS. Neither the video processor circuits nor TDC 1A7 are involved in the processing of the scan video.

The track video circuits in receiver-processor 1A14 consist of the track receivers and the video processor circuits. The receiver range and angle track video outputs convert to digital form in the video processor circuits for further processing. The TDC controls this processing. The resulting video displayed for the target acquisition and track modes is a synthesized video, consisting of a variety of symbols. For range tracking operations, the processing accomplished by the video processor circuits consists of comparing the received sum channel signal (down-converted to a video signal by the range track receiver circuits) with computed anticipated target range (specified by the TDC). This comparison produces a range error output from the video processor, in digital form, which goes to the TDC. The TDC updates its target range calculations accordingly and the process repeats.

For angle tracking operations, the video processor converts the video outputs of the azimuth and elevation angle track receiver channels into digital signals. These signals go to the TDC for computation of angle error data. The TDC provides corrective data to the antenna beam position

control circuits. This data and the range data goes to the refresh memories for transfer to the display indicator(s) to control the positioning of the acquisition and track symbols. The TDC, as specified by its operating program, transfers data between it and the other equipment of the radar via the input/output (I/O) data bus.

AN/UPM–145 radar test set

One of the pieces of test equipment you might use to perform tests and alignments on the PAR is the AN/UPM–145 radar test set. This test set allows you to test radar power, frequency, PRF, range tracking capabilities, receiver bandwidth, and minimum discernible signal. You can also use the test set as a signal generator with CW, pulse modulated (PULSE), square wave (SQW), or FM outputs. These signals are controllable in frequency, power, PRF, pulse width, range, and range rate.

The following discussion will give you a better understanding of the AN/UPM–145 radar test set function and operation. The information covers the features you are most likely to use, excluding the more obvious, such as power ON/OFF. Figure 2–10 shows the front panel of the radar test set.

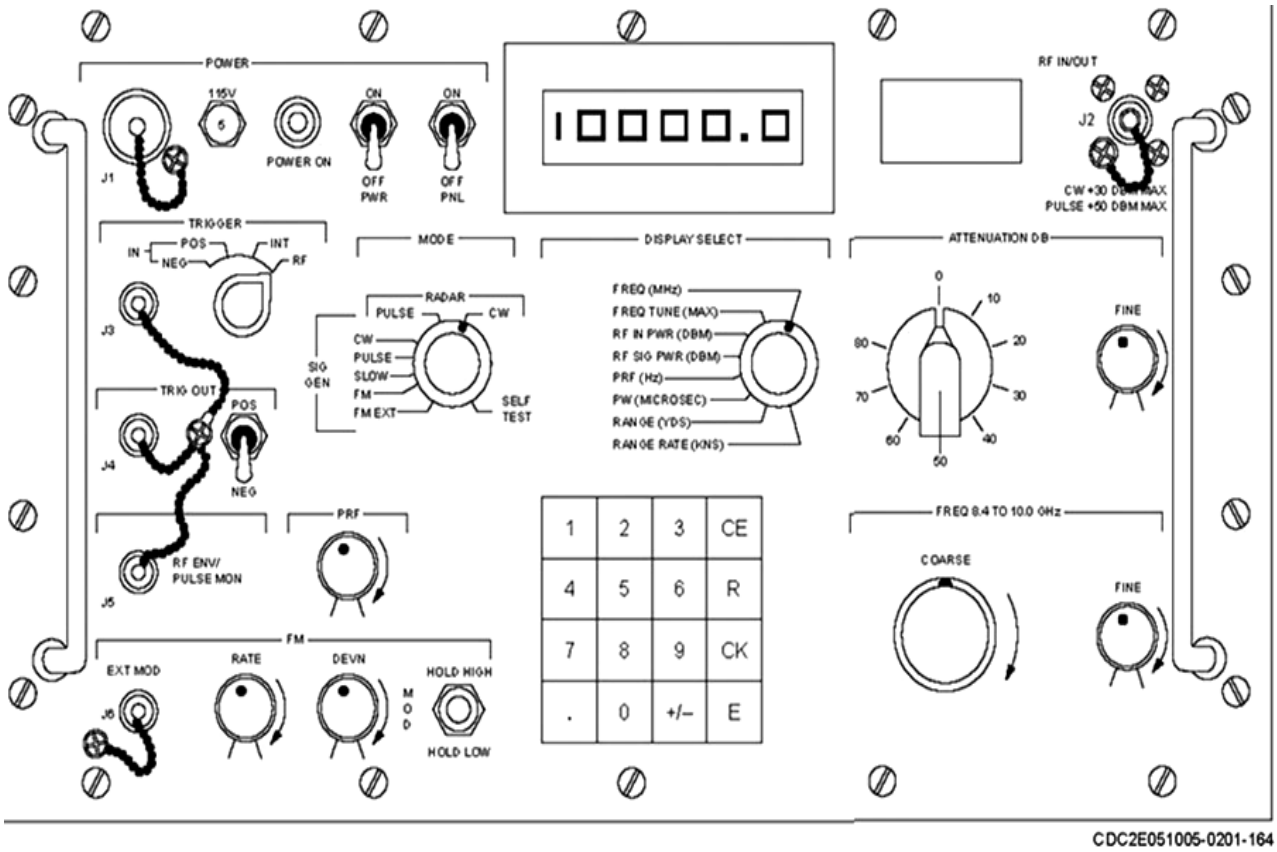

Figure 2–10. AN/UPM–145 radar test set.

Radio frequency IN/OUT

RF IN/OUT connector J2 is located in the upper right hand corner of the AN/UPM–145. The max input of the AN/UPM–145 is +50 dBm for pulsed radar systems. When connecting a radar with a max power of over 50 dBm, use attenuators to reduce the overall input power to at least 50 dBm or less.

Trigger

Unless you are in the signal generator mode, you should leave the trigger switch in the RF position. The other positions allow selection of test set triggering, by either the positive or the negative edge of input triggers, or internal triggering by the PRF generator.

Radio frequency envelope/pulse monitor

RF ENV/PULSE MON provides for monitoring envelope of RF input applied to RF IN/OUT connector J2.

Pulse repetition frequency (R2)

This potentiometer provides for continuous control of the internal test set trigger pulse repetition rate from 50 to 5,500 pps.

A single control provides fine and coarse PRF adjustments. Adjustment of the fine control potentiometer is between detents of approximately 20-degree rotation in the reverse direction from the last coarse/fine adjustment.

Frequency modulation

This functional group provides for frequency modulation of the test set output. The next table provides the parts and associated descriptions of the frequency modulator.

FREQUENCY MODULATION PARTS	
Part	**Description**
EXT MOD J6	Bayonet Neill-Concelman (BNC) connector that provides for application of external frequency modulation to the test set.
RATE (R3)	Potentiometer that provides for continuous adjustment of test set generated FM rate from 0 to 6 MHz per microsecond (MICROSEC) (μs).
DEVN (R4)	A potentiometer that provides for continuous adjustment of internal peak deviation from 0 to +100 MHz of the test set carrier frequency. Used when HOLD HIGH-MOD-HOLD LOW switch is held in HOLD HIGH position.
HOLD HIGH-MOD-HOLD LOW (S7)	Three-position spring loaded switch that returns to center position when released.

MODE switch

This eight-position switch provides for selection of the test set mode of operation, and can select between three different modes of operation (radar, signal generation, or self-test mode). When the MODE switch is in one of the two RADAR positions, it is used for measuring the transmitter frequency, pulsed and CW transmitter power, pulse repetition rate and radar MDS, and to generate a fixed or moving target. When the mode switch is in the SIG GEN position, it acts as the name implies and generates X-band CW, pulse, and square wave signals; triggered X-band FM and externally modulated FM source; and measures the radar IF band pass. When the MODE switch is in the SELF TEST position, the system can test itself prior to the other operations to ensure that it is operating properly.

Display select

The display select provides for selection of a parameter for viewing. The table below describes the positions and parameters for this test set.

DISPLAY SELECT POSITONS/PARAMETERS	
Display Select	**Description**
FREQ MHz	Signal generator output mode. It selects direct display of test set oscillator frequency. The frequency adjusts between 8.4 and 10.0 GHz using coarse and fine controls.
FREQ TUNE MAX	Receiver/Input mode selects direct display of test set oscillator frequency to radar input frequency.
RF IN PWR (dBm)	Selects the direct display of input peak power level at connector J2. Use this position when measuring TX power.

DISPLAY SELECT POSITONS/PARAMETERS	
Display Select	**Description**
RF SIG PWR (dBm)	Selects the direct display of test set output peak power at connector J2. Use this position for measuring MDS.
PRF hertz (Hz)	Selects the direct display of radar PRF (TRIGGER switch to RF), test set internal PRF (TRIGGER switch to INT.), or external trigger PRF (Trigger switch set to IN POS or IN NEG).
Pulse width (PW) MICROSEC	Selects the direct display of test set generated target pulse width. Also enables keyboard entry of new pulse width (MODE switch set to RADAR PULSE or SIG GEN PULSE).
Yards (YDS)	Selects the direct display of test set generated target range. Also enables keyboard entry of new range (MODE switch set to RADAR PULSE or SIG GEN PULSE).
RANGE RATE (KNS)	Selects direct display of test set generated target range rate. Also enables keyboard entry of new range rate (MODE switch set to RADAR PULSE or SIG GEN PULSE). KNS stands for knots.

Keyboard

The 16-key keyboard allows you to enter the pulse width, range, and range rate, when the MODE switch is set to RADAR PULSE or SIG GEN PULSE modes and the DISPLAY SELECT is in the appropriate position. The available pulse widths are 0.12 to 5.00 µs in 0.01 µs steps; the range can be set between 250 and 40,000 yards in 10-yard steps, and the range rate is adjustable from +2,000 to–2,000 in 1-knot steps.

Numeric display

The numeric display is a six-digit numeric display that provides for direct display of the value for the parameter selected by DISPLAY SELECT switch.

Attenuation dB

The ATTENUATION dB heading identifies a functional group, and included in the attenuation group is a nine-position rotary switch that provides attenuation of the RF IN/OUT signal from 0 to 80 dB. There is also a potentiometer identified as FINE, which provides continuous attenuation adjustment of the test set RF output signal level from +7 to –15 dB.

610. Operations section

OPS are the operational center of the AN/TPN–19 LCC. In the remote mode of operation, the LCC transmits control data, status, and antenna positioning control (APC) over the ASR and PAR shelter equipment. Since you may not be familiar with the OPS system in the AN/TPN–19 LCC, this lesson will cover the leading particulars and the layout of this system, starting with the system layout and setup time.

System weights and setup time

Recall that the AN/TPN–19 LCC has two separate configurations. The first configuration, GCA, makes use of a single operations shelter referred to as OPS A communications control group OK–235/T. In this configuration, the shelter contains equipment for radar display, communications, and remote control of both AN/TPN–24 ASR and AN/TPN–25 PAR radars.

The second configuration, RAPCON, is a combination of the OK–235/T and the OPS B communications control group OK–236/T. Therefore, the shelter weights and setup times are different dependent upon the configuration. The OPS A has a total system weight of approximately 7,000 pounds. It takes roughly 4 hours to deploy, set up, align, and make the system operational. The OPS B weighs an additional 6,500 pounds and takes roughly 7 hours to deploy, set up, align, and make the system operational.

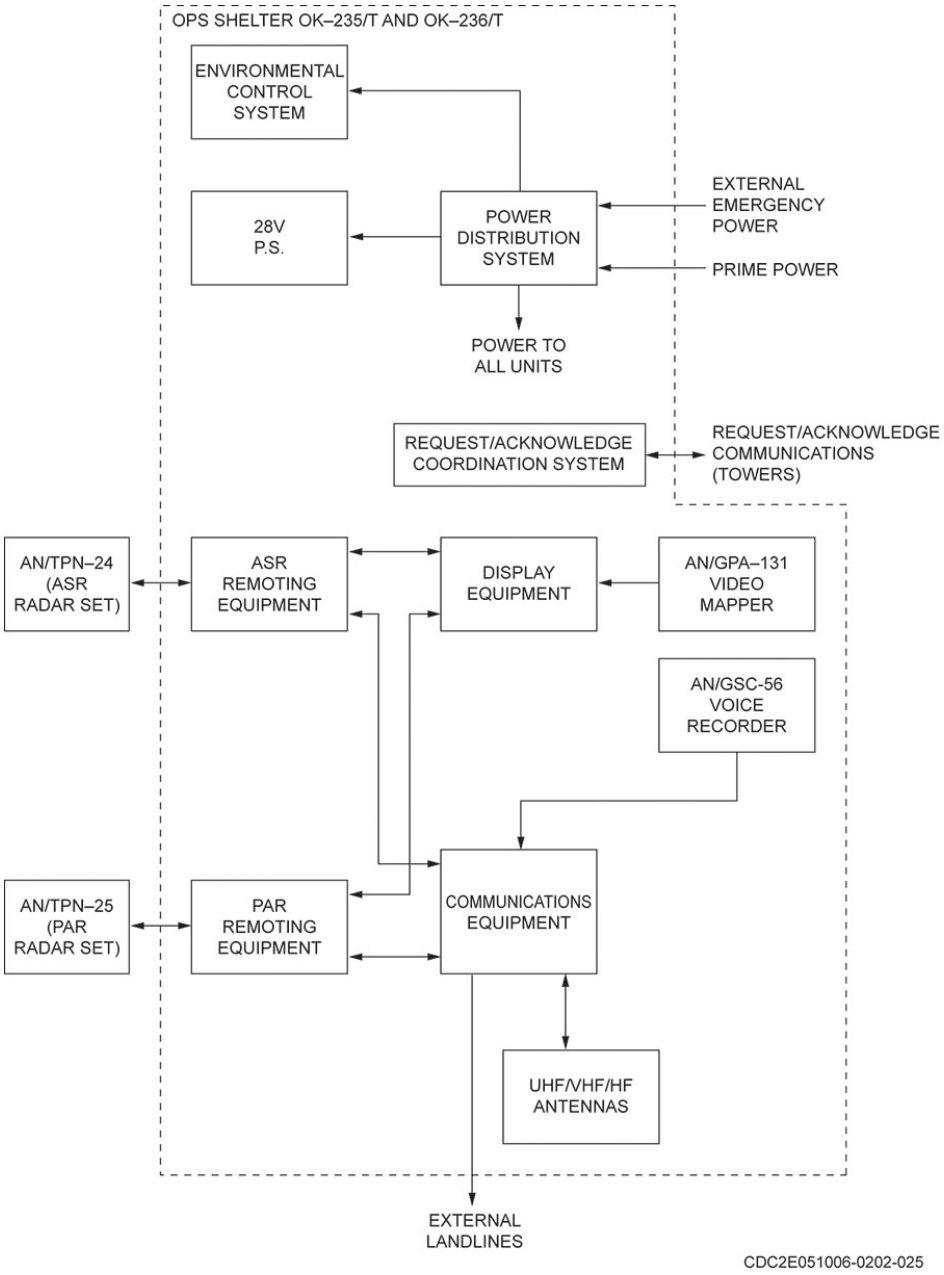

Figure 2–11. OPS shelter relationships within the AN/TPN–19 LCC.

Capabilities and limitations

Both the OPS A and OPS B have three PPIs. The unique feature of the AN/TPN–19 PPI is that it is a dual mode indicator. Each PPI can function as either an ASR or PAR indicator with the push of a switch. When the PPI is placed in the PAR mode, it has an adjustable range scale of 10, 15, and 20 nmi with a range mark interval of 1.0 nmi. The glide slope angle selection is from 2° to 13° in 0.1° steps. The elevation scale is from –1° to +7°, and the azimuth scale is from –10° to +10°. Symbols displayed on the indicator are six tracked targets, one designate, one touchdown reflector, and the altitude of the decision height marker is adjustable from 0 to 890 ft. in 10-foot steps.

When placing the PPI in the ASR mode, it has an adjustable range scale of 10, 20, 60, 100, or 200 nmi with a range mark interval of 2, 5, 10, and 50 respectively. The indicator can display several different videos: normal, MTI or gated MTI radar video, IFF bracket video, and map video.

Emergency power

In the event of prime power failure, an internal battery in the OPS A and OPS B shelter allows a 10-minute period of full power load for the equipment listed in the next table.

EMERGENCY POWER LOADS	
OPS A	**RAPCON**
Transmit/receive on three UHF transceivers.	Transmit/receive on six UHF transceivers.
Transmit/receive on one VHF transceiver.	Transmit/receive on three VHF transceivers.
Communications control equipment.	Communications control equipment.
Interior and obstruction lights.	Interior and obstruction lights.

Shelter siting and layout

The shelter may be set up on a grade of up to 6 percent and within 10 nmi, for 7.5 GHz microwave remoting, or within 4.3 nmi, for 15 GHz remoting of the AN/TPN–24 ASR and AN/TPN–25 PAR.

Before looking at the overall system operation, you need to first get an idea of where the equipment is located within the OPS A shelter (fig. 2–12) and the OPS B shelter (fig. 2–13). The tables following the figures list the reference designators. As in the rest of the TPN–19, the first number indicates the major system, that is “3” designates components of the OPS A shelter, and “4” parts of the OPS B shelter. The second part of the reference designator matches the labels in the figures, and denotes a subsystem or component. For example, “3A15” is a display in OPS A; 3 = OPS A and A15 = display.

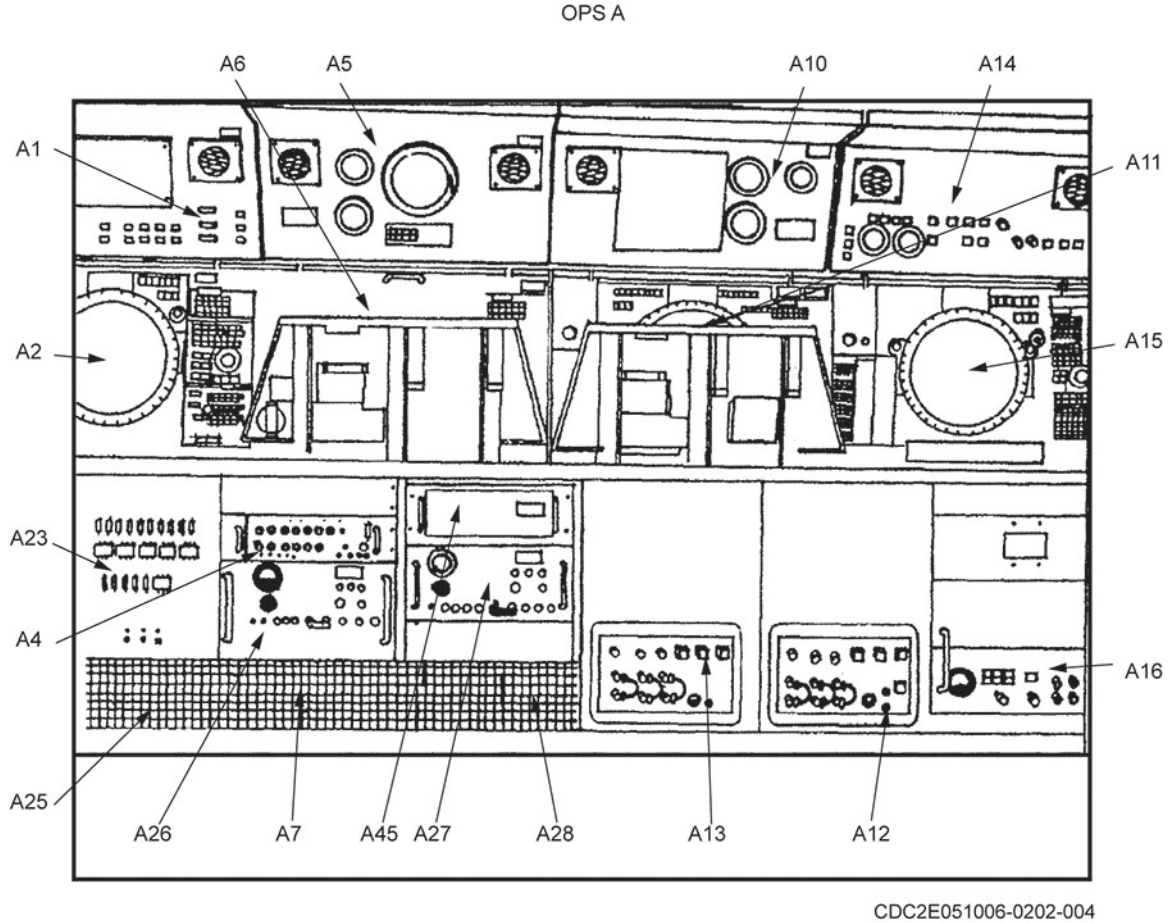

Figure 2–12. Layout of equipment within OPS A.

AN/TPN–19 LCC COMPONENTS REFERENCE DESIGNATORS (OPS A)			
Reference Designator	**Common Name**	**Reference Designator**	**Common Name**
(Unit) 3	OPS A shelter	3A12, 3A13	OPS/PAR remoting equip
3A1	ASR radar set control	3A14	PAR radar set control
3A2, 3A11, 3A15	Indicator, display	3A16	Communications distribution unit
3A4	Power supply/plus 28 VDC	3A23	Panel, power distribution
3A5	IFF radar set control	3A25, 3A28	UHF radio RX-TX GRC–171
3A6	Manual controller console	3A26	VHF radio RX-TX GRC–211
3A7	Display processor	3A27	UHF radio RX-TX GRC–171
3A10	Weather radar set control	3A45	Record patch panel

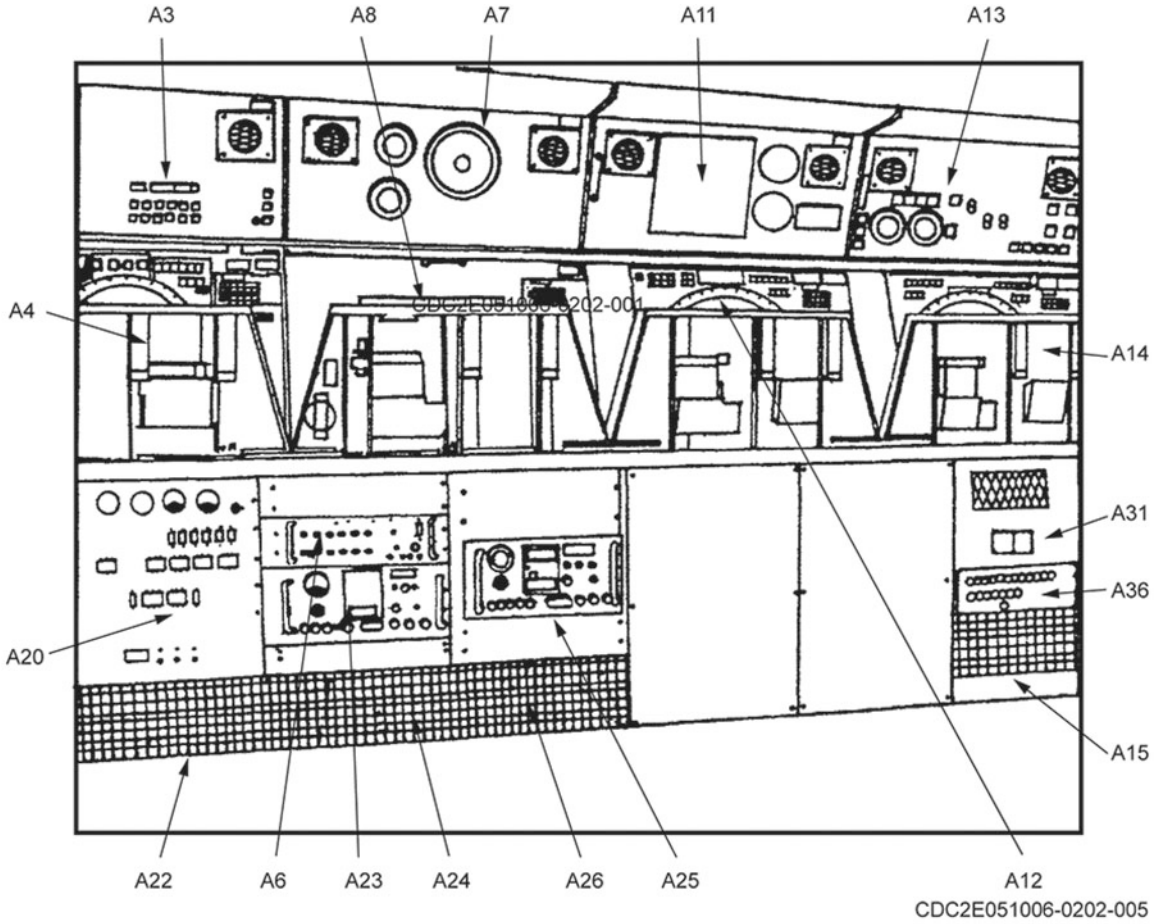

Figure 2–13. Layout of equipment within OPS B.

AN/TPN–19 LCC COMPONENTS REFERENCE DESIGNATORS (OPS B)			
Reference Designator	**Common Name**	**Reference Designator**	**Common Name**
(Unit) 4	OPS B shelter	4A13	PAR radar set control
4A3	Type A-control box	4A15	Communications distribution unit
4A4, 4A12, 4A14	Indicator, display	4A20	Panel, power distribution

AN/TPN–19 LCC COMPONENTS REFERENCE DESIGNATORS (OPS B)			
Reference Designator	**Common Name**	**Reference Designator**	**Common Name**
4A6	Power supply/plus 28 VDC	4A22, 4A25, 4A26	UHF radio RX-TX GRC–171
4A7	Weather radar set control	4A23, 4A24	VHF radio RX-TX GRC–211
4A8	Manual controller console	4A31	Control, air conditioner
4A11	Wind direction and speed, indicator group	4A36	Range azimuth beacon monitor (RABM) (TPX–49)

Self-Test Questions

After you complete these questions, you may check your answers at the end of the unit.

607. System purpose and description

1. What two navigation systems help make up the AN/TPN–19, Landing Control Central?

2. In which configuration is the LCC a RAPCON?

3. In both LCC configurations, the radar can be separated from the OPS shelter up to how many miles?

608. AN/TPN–24 Airport Surveillance Radar

1. The search radar portion of the AN/TPN–24 Airport Surveillance Radar has a range of how many miles?

2. The beacon system of the AN/TPN–24 has a range of how many miles?

3. When remoting the AN/TPN–24, what is the MAX line-of-site using a microwave link?

4. At what frequency range does the AN/TPN–24 transmitter generate pulses?

5. Define the term “dual-frequency diversity.”

6. Name the three separate receivers in both A and B radar receiver of the AN/TPN–24.

7. How many AN/TPN–24 feed horns determine the shape of the transmitted beam in elevation?

8. When the microwave data link is used between the OPS and ASR shelters, what processes are used for the large amount of remoted data link signals?

609. AN/TPN–25 Precision Approach Radar

1. What navigational information does the AN/TPN–25 PAR provide to the GCA operators?

2. The AN/TPN–25 can process the range, elevation, and azimuth positions of a MAX of how many aircraft?

3. The AN/TPN–25 PAR is a tactical version of what system?

4. By what factor does the AN/TPN–25 transmitter multiply the frequency?

5. How do symmetrical targets, such as raindrops, reflect the radiated pattern of the AN/TPN–25?

6. In a phased array antenna, how is the radar beam is formed?

7. In each search (scan) receiver, what produces the real-time target video for further processing and display?

8. What provides corrective data to the antenna beam position control circuits?

9. What parameters of the PAR does the AN/UPM–145 radar test set allow you to test?

10. When using the AN/UPM–145 radar test set, what position must the MODE select switch be in to generate X-band continuous wave?

610. Operations section

1. What are the set-up, align, and system operational times for both OPS A and OPS B configurations?

2. What is the unique feature of the AN/TPN–19 dual mode PPI?

3. In the event of prime power failure, how long does the internal battery in the OPS A and OPS B shelter provide power?

4. What does the first number in the component reference designator indicate?

5. What does the reference designator “4A31” represent?

2–3. AN/TPX–42A Secondary Surveillance Radar

The AN/TPX–42A was designed to assist the air traffic controllers in making positive aircraft identification. It is also known by names other than AN/TPX–42A. Some of these names are secondary surveillance radar or (SSR), ATCRBS, secondary radar, IFF/SIF, and beacon radar and synthetic radar. The AN/TPX–42A is used with the AN/TPN–19 and several other mobile and fixed systems. IFF/SIF was covered in volume 2 of this course, but this section explains certain aspects of the processes and relationship to specific equipment.

611. Overview of the identification, friend or foe/selective identification feature system

IFF is an identification system designed for command and control. It enables military and civilian air traffic control interrogation systems to identify aircraft, vehicles or forces as friendly and to determine their bearing and range from the interrogator. The selective identification feature is a capability that, when added to the basic identification friend or foe system, provides the means to transmit, receive, and display selected coded replies. We start this lesson by providing characteristics of the primary and secondary radar.

Primary and secondary radar characteristics

As you know, the primary radar is a pulse out and pulse back system. However, the secondary radar transmits two pulses out and receives back a coded reply from an aircrafts’ transponder. These two pulses out are sometimes referred to as “challenge video pulses,” or “interrogation pulses”. The transponder replies from the aircraft are referred to as “reply code trains.” The word “interrogates" means to question. Therefore, the two interrogation pulses are “questioning" the aircraft. Specifically, they ask, “Who are you?” and “How high are you?”

To provide video time coincidence of the primary radar target and the interrogation radar target on the same indicator, a trigger from the primary radar system is necessary. Except for this synchronizing trigger and the use of a common display unit, the two radar systems operate independent of each other. The radar pre-trigger (RPT) from the primary radar is used to develop the AN/TPX–42A beacon synchronized trigger (BST). The AN/TPX–42A system also requires azimuth position

information in order to provide data for azimuth processing and to synchronize the indicator sweep with the actual antenna rotation. The AN/TPX–42A is capable of processing 200 nmi of synthetic radar information for display. This requires a minimum of 2500 µs for its pulse repetition time (PRT). 200 nmi X 12.36 µs = 2472 µs, plus 21 µs for the time required for the longest mode of interrogation, mode C = 2493 µs. The PRT of ATC primary radar only allows processing of 60 nmi of video for display. The primary radar PRT will be used to establish the PRT of the secondary radar. This sometimes results in the PRT of the secondary radar being larger than the minimum time required.

AN/TPX–42 receiver/transmitter characteristics

The AN/TPX–42A transmit frequency is 1030 MHz and has a receive frequency of 1090 MHz. The transmitter, shown in figure 2–14, generates two RF interrogation pulses and the time interval between these two pulses establishes the mode of operation that the secondary radar is processing each PRT. A receiver/transmitter (transponder) in the aircraft accepts or rejects the interrogations based on the time interval between the two pulses received. Thus, the controller and the aircraft must have their identification equipment selected to the same mode of operation if two-way transmission is to be achieved. The transponder frequencies are reverse of the AN/TPX–42A; it receives at 1030 MHz and transmits at 1090 MHz.

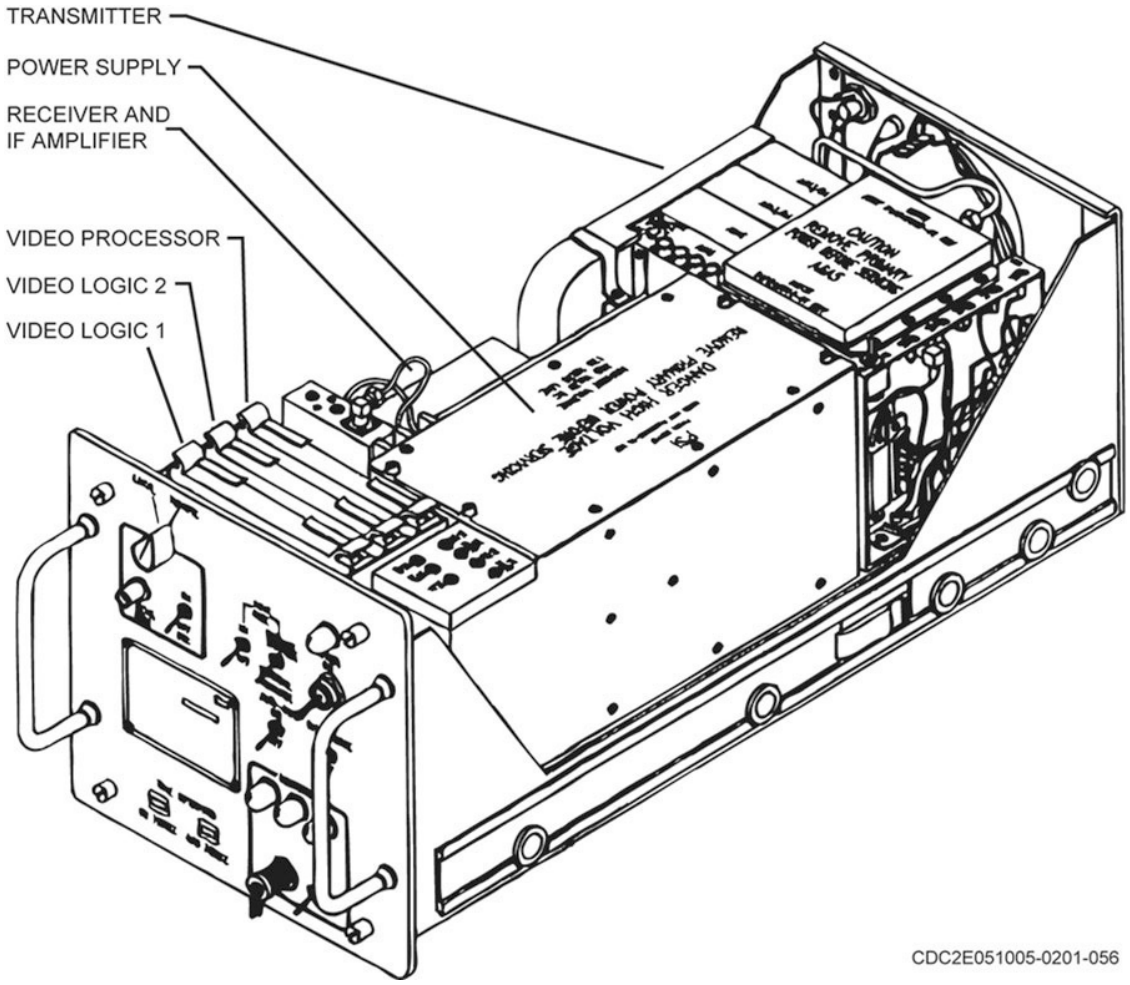

Figure 2–14. AN/TPX–42A receiver/transmitter.

The next lesson covers different modes of interrogation and how they are used in the AF environment.

612. Modes of interrogation

The AN/TPX–42A Interrogator Set provides a beacon system that works with, but gives separate and additional capabilities to, radar air traffic control facilities. The set has four major modes available, Modes 1, 2, 3/A, and C. Modes 1 and 2 are for military use. Mode 3/A, which now has a 4096 code capability, is the common civil/military mode. Mode C displays direct altitude read-out and is continuously operable. This lesson starts by discussing interrogation pulses.

Interrogation pulses

Each mode of operation has a unique corresponding pulse spacing length. These interrogation pulses are transmitted at a frequency of 1030 MHz and each has a 0.8 μs pulse width. The first pulse transmitted is called P1 and the last pulse transmitted is called P3. The P3 pulse always occurs at the same time of each PRT. The time between P1 and P3 is what determines the interrogation mode of operation. The spacing between the P1 and P3 pulse for a mode 1 interrogation is 3 μs, mode 2 is 5 μs, mode 3 is 8 μs and mode C is 21 μs. Modes 1, 2, and 3/A are for obtaining aircraft ID information and mode C is for obtaining aircraft altitude information.

The mode of operation of the interrogation system is selected with a mode switch on the indicator control box, commonly called “A Box” or “C-Box” located at each controller position. They have at their option the ability to interrogate in mode 1 & C, mode 2 & C, or mode 3 & C.

The mode switch is located directly above the COMM FLR lamp on the A Box or to the left of the range error light on the C-Box. Mode C is always selected. The reason for this is mode C supplies altitude data on all aircraft regardless of the ID mode being interrogated. Only one mode of interrogation is possible during a single PRT. Therefore, when two or three modes are selected, they are interrogated on alternate PRTs. This method of alternating modes is called interlacing.

Interlacing

Interlacing allows controllers to select and view a mode of interrogation for their particular indicator. If all indicators have selected mode 3C, then the interlace sequence would be a 2 mode interlace. An example of a 3 mode interlace would be if one indicator would display only mode 2C aircraft and another would display only 3C. Although there are four modes of interrogation possible for selection (modes 1, 2, 3/A and C), the MAX of modes that can be interlaced is three. For this reason, certain modes have priority over others.

You will recall that mode C is always selected, therefore it will always be in the interlace sequence. The priority of modes is 3/A, 2, and 1 respectively with mode 3/A having the highest priority. If the controllers select all four modes, the system is normally wired to reject the selection and inhibit mode 1, it will then automatically process modes 2, 3/A, and C interlace. However, other options are available depending on the mission. Mode 3 is also designated mode A by the civilian air traffic controllers. Thus, you will often see it written “3/A.”

Identification friend or foe/mode 4

Mode 4 is the only IFF mode, but is not compatible with the AN/TPX–42A. It is a crypto-secure mode of identification and provides rapid, high confidence identification of friendly targets, giving the operators more time to evaluate unknown targets. Friend or foe identification is further discussed throughout the AN/TPS–75 radar section.

613. Control box functions

There are three different types of control boxes in the system. There are the Indicator Control C–8625/T (often called the A-Box), the Interrogator Control C–9684/T (called the B-Box), and the Indicator Control C–10501/T (called the C-Box). These are described more thoroughly below starting with the Indicator Control C–8625/T (A-Box).

Indicator Control C–8625/T (A-Box)

The indicator control is commonly called the A-Box and provides indicator control within reach of the controller. There is one A-Box at each indicator console in the RAPCON and is used strictly with the mobile radars using the OD–57/58 indicators.

The A-Box permits the controller to request a particular mode of interrogation, to select the display of aircraft within certain altitude limits, and to select up to 10 discrete identity display combinations. A format position enables the controller to position the display format information to the north, south, east, west, or on top of the target symbol. The controller can choose to have one target displayed or various combinations of targets displayed depending on the various switch settings.

The indicator control also provides controllers with various audible alarms and lamp indications. They warn the controller of impending emergencies or problems occurring within the secondary radar system. The emergency alarms and indicator lamps identify communication failure, emergency and hijack replies. A few of the indications and switches are explained in the following list:

- Interr—The interrogation light indicates the receiver/transmitter is functioning correctly.
- RDC range—The reduced range light indicates that the B-Box range select NMI switch is set below MAX.
- Range error—The range error light indicates an error in video time coincidence between the primary and secondary returns.
- Defruit—The defruiter light indicates that replies un-synchronous in time with the system are being eliminated.
- Mode indicator lights—The mode indicator lights 1, 2, 3A, and C, show all the modes being selected and interrogated by all the indicator positions.
- Mode switch—The MODE SWITCH selects mode & interlace sequence for display on that indicator only. This aids the controller by eliminating the display of aircraft not being controlled at his particular position. Remember however, they will both view ID and altitude data on all aircraft.

Interrogator Control C–9684/T (B-Box)

The Interrogator Control B-Box, as shown in figure 2–15, is the master remote control of the AN/TPX–42A. It provides controls for selecting redundant systems and associated required indicating lamps.

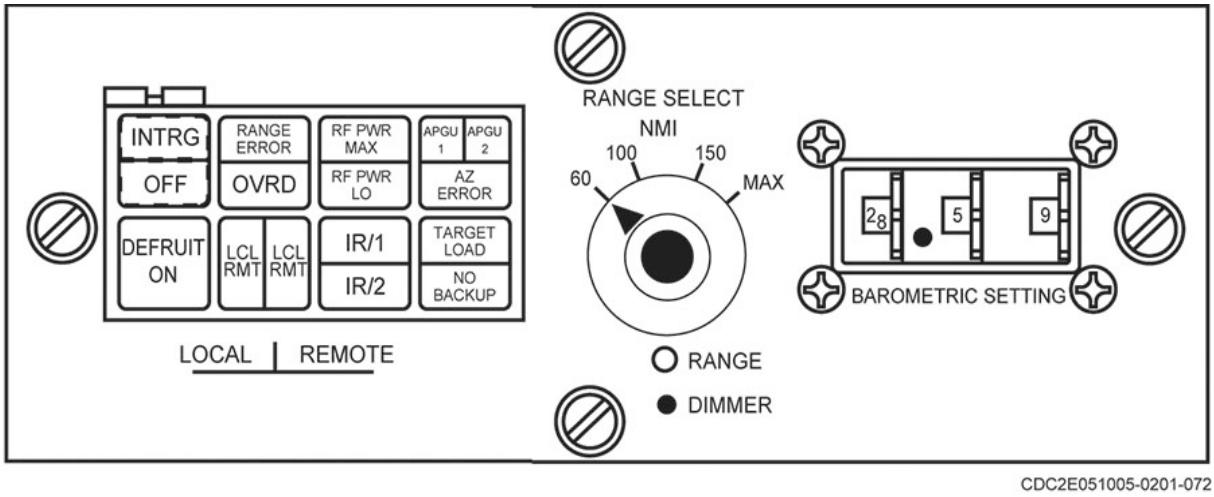

Figure 2–15. C–9684/T (B-Box) front panel.

Switches and lamps

There is one B-Box and it is located at the chief controller's position. Its barometric setting switches provide preset barometric pressure data to the indicator data processor for correction of altitude data if an aircraft is below a preset level.

The range select switch allows the chief controller to reduce the MAX range of processing time in the video signal processor. This reduces the minimum PRT of 2500 µs required for the AN/TPX–42A. When this switch is set below MAX, the RDC RANGE lamp on the A-Box will illuminate notifying the controller that the MAX range for display has been reduced.

Range error override

The range error light above the OVRD switch indicates an error in video time coincidence between the primary and secondary returns, just like on the A-Box. If a range error occurs, secondary radar display will be lost. The chief controller can override this error by pushing the OVRD button thus displaying secondary radar display.

Indicator Control C–10501/T (C-Box)

Indicator Control C–10501/T is commonly called the C-Box. The C-Box is similar to the A-Box and is used with the OD–153 Indicator.

The A-Box has been replaced with a C-Box with fixed radars using the programmable indicator data processor (PIDP II). This C-Box works with version 10 and 11 of the AN/TPX–42A. It has all the same functions as the A-Box, only now the target load and selection has increased. The C-Box ties the system in with the PIDP II computer. The PIDP II determines which indicator is selected as the master indicator.

The main difference between the A and C-Boxes is the C-Box is used with the fixed radar configuration using the OD–153 PPI. In addition, the selection of target and target display is accomplished with a keyboard located in front of the indicator. The C-Box also provides the controller with various audible alarms and a visual indicator for emergency or problems occurring within the secondary radar system.

Self-Test Questions

After you complete these questions, you may check your answers at the end of the unit.

611. Overview of the identify friend or foe/selective identification features system

1. What is the difference between the primary and secondary radar in relation to how many transmit pulses the radar sends out?

2. What does the primary radar provide to develop the AN/TPX–42A BST?

3. What are the transmit and receive frequencies of the AN/TPX–42A?

612. Modes of interrogation

1. What are the four major interrogation modes of the AN/TPX–42A?

2. Which mode operates continuously?

3. With interrogation pulses, what determines the interrogation mode of operation?

4. Which interrogation mode has the highest priority?

613. Control box functions

1. What three things does the A-Box allow a controller to do?

2. Which box provides audible alarms and lamp indications?

3. Which box is the master remote control of the AN/TPX–42A?

4. What happens to the system if a range error occurs?

5. What is the main difference between the A and C-Box?

2–4. AN/TPS–75 Aircraft Control and Warning System

If a remote site needs aircraft azimuth, range, height, and IFF information, in a 240-nmi area, the AN/TPS–75 is perfect for the job. As part of the GTACS, the equipment provides a “real-time” radar airspace picture and data in support of the battle commander. This section will explain a few characteristics of the AN/TPS–75, also called the “Tipsy 75”.

614. System purpose and description

Before you undertake an in-depth study of the AN/TPS–75 radar set, you need to be familiar with the overall purpose and physical description of the system. We’ll begin by discussing the purpose of the AN/TPS–75 radar set.

Purpose

The AN/TPS–75 radar set, shown in figure 2–16, is the premier long-range ground radar for the United States Air Force (USAF) and the backbone of the US Air Defense Network. It is a transportable radar system that provides simultaneous range, azimuth, height, speed, and IFF/SIF information on aircraft for a radius of 240 nmi. It also interfaces this information with the AN/TYQ–23rd Tactical Air Operations Module (TAOM) either in a local or remote capability, allowing OPS personnel the ability to control aircraft from as close as being on the same site or as far away as home station. The radar system collects aircraft information regardless of weather conditions or enemy jamming attempts. The radar set is a self-contained, data-gathering system that only requires a 400 Hz primary power input.

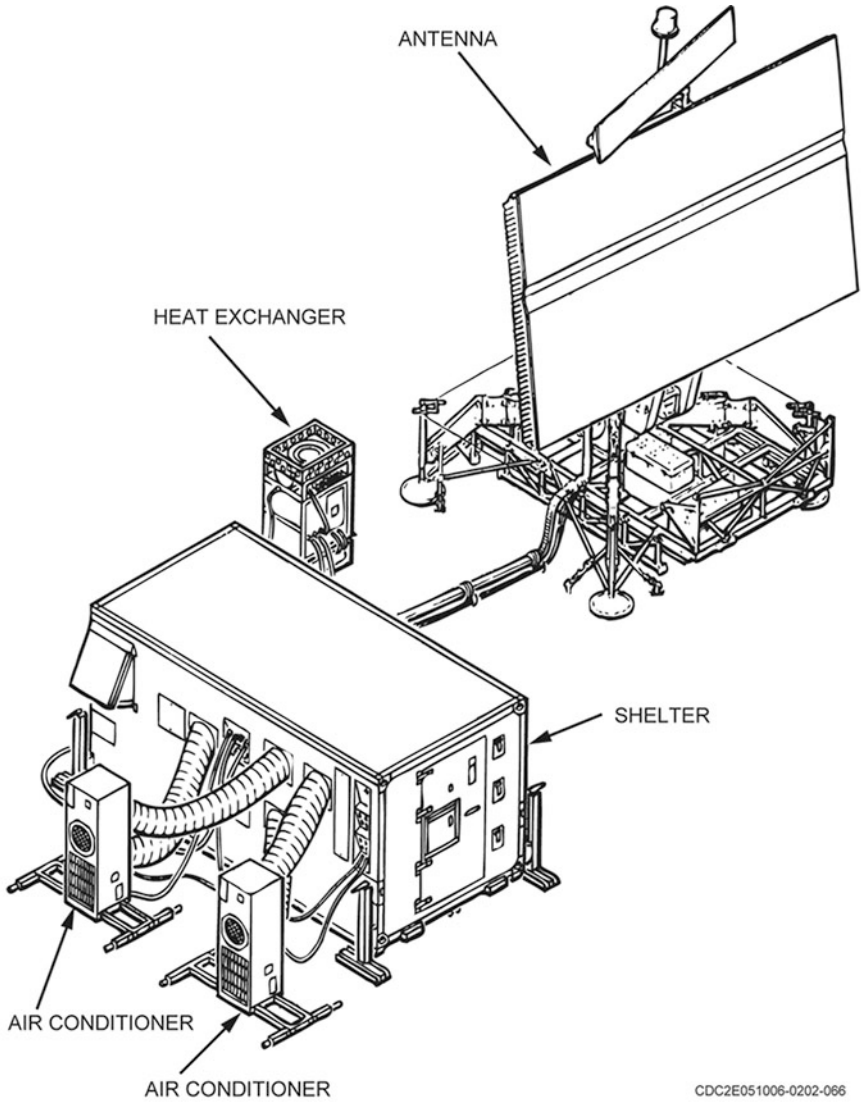

Figure 2–16. AN/TPS–75 radar set.

Description

In the normal transit configuration, the complete radar set consists of two packages: a shelter and an antenna pallet (fig. 2–17). Each package is transportable by truck or on an M832 mobilizer dolly. The shelter package transit configuration contains all of the electronic equipment including the heat exchanger, two air conditioners, and the IFF/SIF antenna. An optional configuration, if available and approved, is the environmental control unit (ECU) pallet. In this configuration the heat exchanger and

both ECU's are mounted onto a small pallet and deployed as a third piece. This relieves some of the stress on the shelter floor and extends the life of the shelter. The antenna pallet transit configuration contains the receiver microwave components, radar antenna, side-lobe reference (SLR) antenna, drive components, and rotary joint. The antenna pallet provides transit storage locations for the tools, tie downs, ground anchors, and the stationary waveguide.

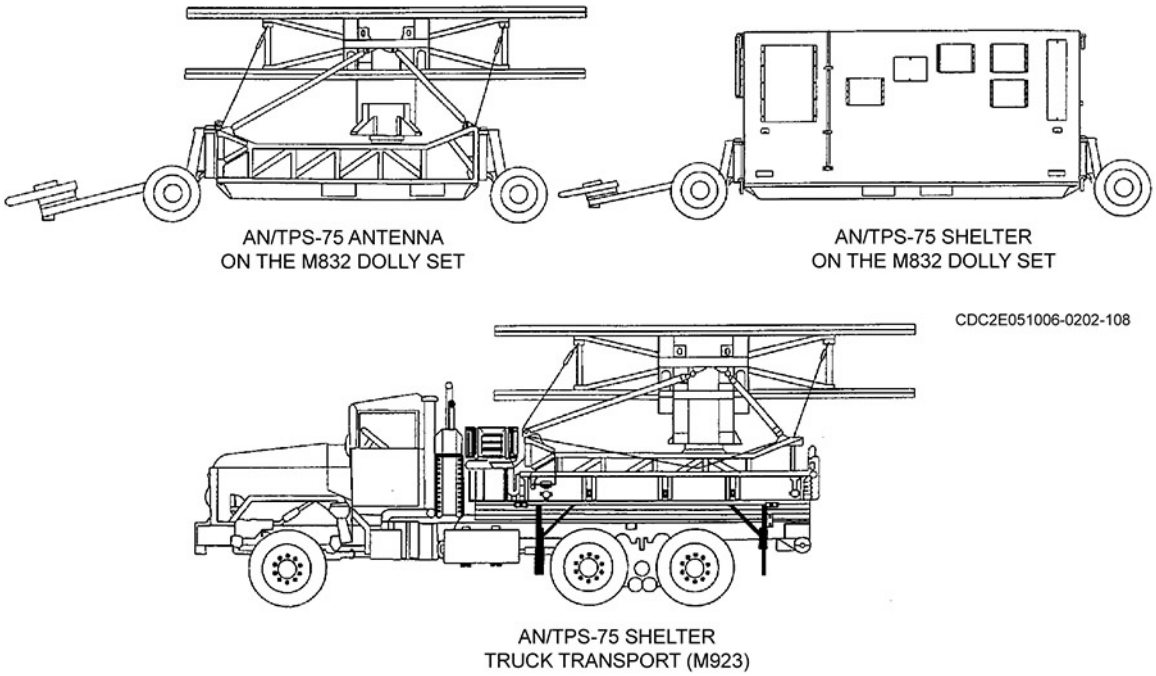

Figure 2–17. AN/TPS–75 radar set transit configuration.

615. Overall system operation

The AN/TPS–75 radar set consists of three major subsystems: the search radar, IFF/SIF, and communications. A general system overview of the radar set and each subsystem is covered in this lesson to give you a basic understanding of the different components. The lesson starts by discussing the search radar subsystem.

Search radar subsystem

The search radar subsystem determines the position of all aircraft within its surveillance area by transmitting a high-power pulse and then receives and decodes the reflected energy from the target. It processes the reflected energy and displays the resulting target information on a PPI. For further processing and remoting, the search radar sends the target information to the MCE and modular control equipment interface group (MIG). The radar derives target height using a stacked beam antenna and multiple receivers. To achieve these results, a little closer look at the individual parts is necessary.

Frequency generator

The frequency generator, shown just above the post processor in figure 2–18, generates the phase coded 6.8 μs transmit pulse (TX PULSE), the 32 MHz coherent local oscillator frequency (COHO), STALO, and the IF and RF TEST TARGETS. The TX PULSE goes to the transmitter to be amplified. The COHO is the radar's IF it also generates the master clock in the synchronizer. The STALO reference frequency, which is the transmit frequency minus 32 MHz, goes to the RF receivers on the radar antenna for mixing with the target return. When enabled, the frequency generator also generates IF or RF TEST TARGETS to inject into the radar system for testing purposes.

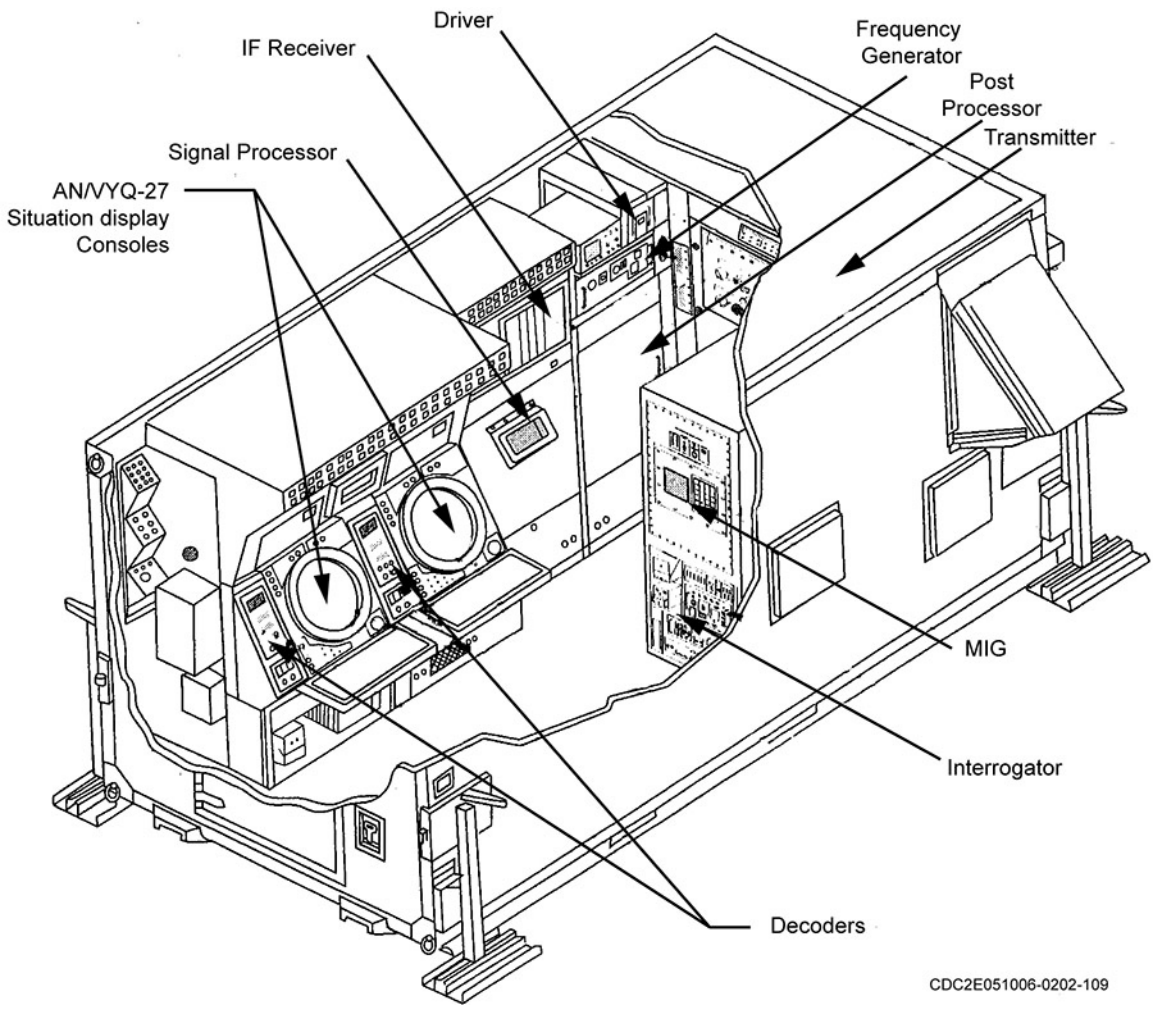

Figure 2–18. Cutaway view of the radar shelter.

Radar transmitter

With the exception of the driver, the radar transmitter is located in a compartment at the back of the shelter. The driver is a separate unit located above the frequency generator. The driver and transmitter, shown in figure 2–18, amplify the low power TX PULSE from the frequency generator to a level of approximately 3 MW. This TX PULSE travels to the radar antenna via a pressurized waveguide. Due to the excessive heat buildup in generating this high power pulse, the transmitter requires more cooling. To accomplish this additional cooling, a heat exchanger is located outside the shelter, which circulates liquid coolant throughout the transmitter to remove the heat. The transmitter's operating voltage is 3-phase, 120/208 volts, alternating current (VAC), 400 Hz.

Antenna

The radar set radiates the high-power transmit pulse into space using a slotted waveguide, stacked-beam antenna to provide simultaneous range and height information on targets over a wide range of elevation angles. A tilt adjustment that varies the angle of the antenna's rotating array relative to the pedestal can alter the antenna coverage. All microwave components are on the back of the lower array assembly with the exception of the IFF/SIF and SLR antennas, which are located on top of the array as shown in figure 2–19.

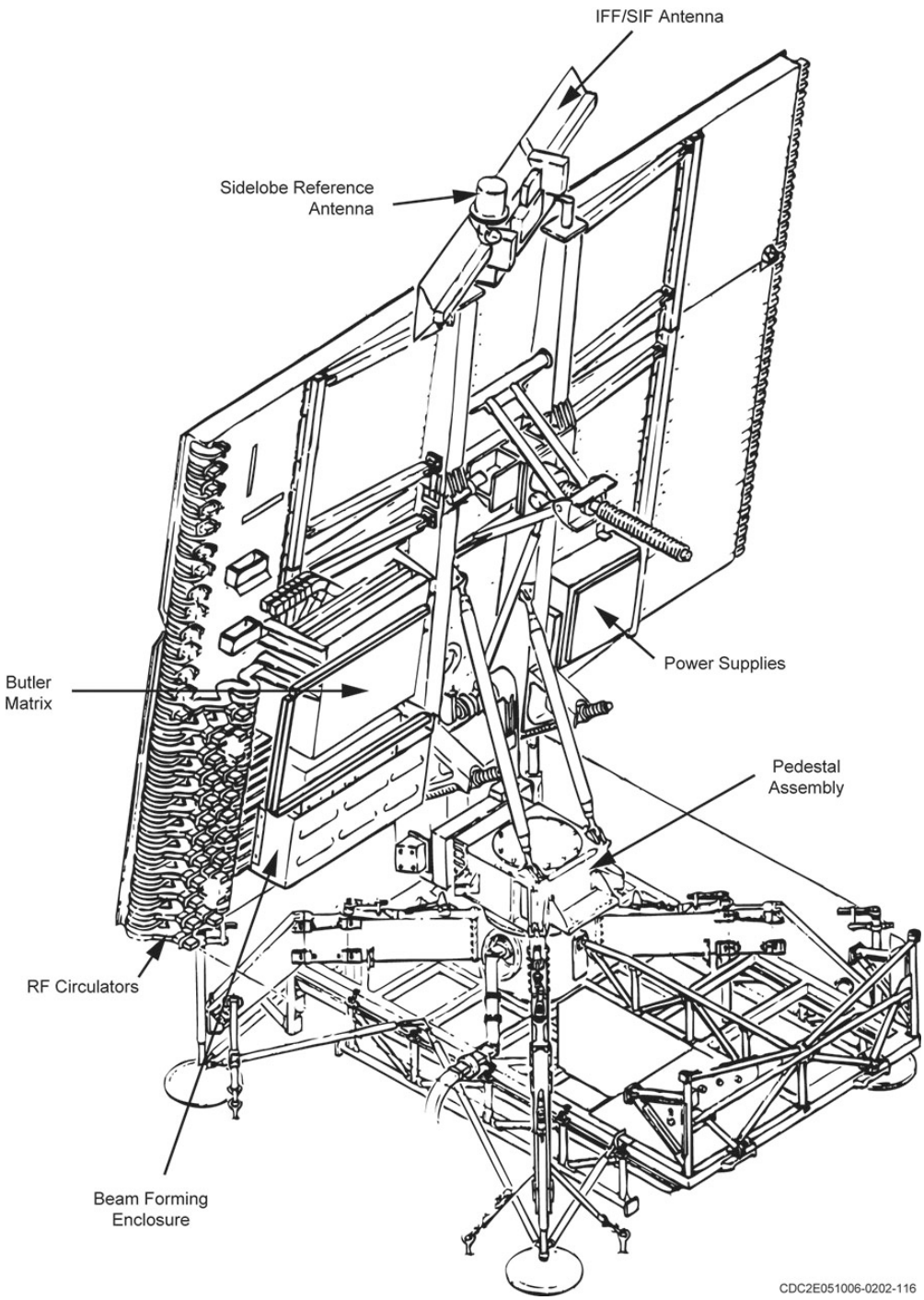

Figure 2–19. AN/TPS–75 antenna.

NOTE: FO–2 shows you the overall system interconnection; you may want to refer to it periodically. Figures 2–18 and 2–19 shows the radar shelter and antenna with the major components labeled to give you a better understanding of essential functional areas locations.

Intermediate frequency receivers

There are seven IF receivers, shown in figure 2–18 just above the signal processor. They receive signals from the six channels of the search radar antenna and the one channel of the omnidirectional SLR antenna. The IF receivers amplify the 32 MHz signals and convert them to the in-phase (I) and

quadrature-phase (Q) video signals. Seven analog-to-digital (A/D) converters change the analog video signals into digital signals. The digital outputs of the A/D converters go to the signal processor.

Signal processor

The signal processor receives the digital target returns from the IF receiver and generates the required videos and height data. The types of video include, search (normal), MTI, weather/electronic countermeasures, and inverse jamming amplitude versus azimuth. The different video signals and height data undergo peak selection and combining. The resultant video signals and height data go to the post processor for processing. The signal processor also generates and processes jamming analysis and transmission selection (JATS) system data.

Post processor

This processor receives the radar target video signals from the signal processor and the IFF TARGET VIDEO from the IFF subsystem in the MIG equipment unit. The post processor compares the range and azimuth information and correlates IFF and radar returns. It then processes the returns for transmission to the PPIs as SEARCH DISPLAY VIDEOS and SERIAL DATA and to the external modems (not shown). The post processor also receives height information from the signal processor and computes the height for each target return. The HEIGHT DATA goes to the digital height readout (DHRO) panels located at each indicator position.

Built-in automatic self-test features and on-line monitoring

These features provide a continuous survey of essential subsystem parameters. Built-in manual self-test and calibration features provide capabilities for selective confidence checking and fault isolation. The frequency generator provides test targets—IF and RF—to balance and check out the equipment. A comprehensive test-point placement scheme and a built-in monitor scope permit rapid fault isolation to the replaceable subassembly in the processors. Many of these are accessible through the radar control panels.

Plan-position indicators

The AN/TPS–75 radar set has two AN/UYQ–27 situation display consoles inside the radar shelter. These indicators display radar surveillance and ground control intercept signals. The display on the indicators consists of radar video mixed with digital target extractor signals. The PPI shows the resulting presentation superimposed with vectors, alphanumerics, and symbology. This display permits measurement of range and azimuth of the displayed targets and range and bearing of one target with respect to another.

Digital height readout panels

These panels connect to the side of the indicators. When the operator positions the height window over the selected target, the DHRO panel displays the target height in thousands of feet.

Radar control panels

The radar control panel (RCP) units 26 and 64, shown in FO–2, are the central controlling points for the entire radar system. Unit 26 is located above the PPIs and unit 64 (which is portable) mounts to the signal processor door. The RCPs are touch-screen devices that allow the user to access menus to enter specific operating and maintenance perimeters. The RCP controls communication between the signal and post processors, coordinating the actions between the two processors. The operation of both RCPs is identical.

Prime power protection unit

While not shown on FO–2, this unit monitors the three lines of the 3-phase, 120/208-volt, 400 Hz power electrically connected between the primary power source and the power distribution panel. It prevents the radar system from operating when the input power is not within specified limits. It

monitors the input lines for overvoltage and undervoltage, correct frequency, and correct phase sequence.

Modular control equipment interface group

The MIG is the interface between the TAOM and the radar. It receives triggers, IFF/SIF, and radar data from the radar. The MIG processes and formats them into track reports for transmission to the TAOM. These track reports provide range, speed, bearing, altitude, and IFF/SIF code on each aircraft to be displayed in the operations module or remoted to other command and control or air defense agencies.

Identify friend or foe/selective identification features subsystem

This secondary surveillance system interrogates IFF/SIF transponders of aircraft, receives coded IFF and SIF replies, and decodes these replies for display on the indicators. The IFF/SIF replies correlate with the radar returns. The AN/UPX–37 Interrogator Set (located in the MIG equipment unit) interrogates the aircraft's IFF/SIF transponders. The AN/UPA–59 decoders next to each indicator select the mode of the IFF/SIF targets to display and the code of specific aircraft to highlight using one of the two five-channel decoder expander units. There is more information on the operation of the AN/UPX–37 interrogator later in this volume.

Communication subsystem

The communication subsystem provides a communications link between the operators in the radar shelter and either an airborne or a remote land-based location. Five modes of communication are available:

1. UHF radio.
2. Telephone.
3. Intercommunications.
4. High frequency (HF) radio.
5. Six-channel troposphere radio.

The intercommunications mode allows the two operator positions and the one senior weapons controller to talk to each other. Now that you have a general understanding of the AN/TPS–75 radar system, you can now probe how it works.

616. Radar initialization and control functions

The system performs the radar initialization function (fig. 2–20) automatically at system power-up and the resumption of power after an interruption. Radar initialization consists of loading variable parameters and configuration data from nonvolatile memories into a volatile data memory. It also loads the programs and the downloaded variable parameters from program and storage memories into the six individual system microprocessors. To begin this lesson, let's discuss the serial communication interface.

Serial communication interface

The transfer of the program and variable parameters to the six system microprocessors is through the serial communication interface. The serial communication interface has six universal synchronous/asynchronous receiver/transmitters (USART) that correspond to each of the individual system microprocessors. The six system microprocessors are responsible for the following functional areas:

- Received signal desquint (desquint).
- Target data output processor (formatter).
- Left monitor fault isolation (LMFI)—signal processor.
- Target data post processor—array signal processor (ASP).

- Height management and frequency selection (HGT/FREQ MGT).
- Synchronizer/trigger control right monitor fault isolation (RMFI)—post processor.

Each of the functions above also incorporates built-in test equipment (BITE). The control panel interface completes the interface of the radar control and initialization multibus data bus with the other system units and boards. USART on the control panel interface provide serial communications links for the two radar control panel displays with the multibus. The radar initialization and control function receives status signals from, and sends control signals to, the MIG rack for IFF/SIF monitoring and mode selection. In addition, it receives status signals from and sends control signals to the transmitter. The radar initialization and control function sends a “NO RF” signal to the synchronizer and clutter mapper to alert these functions that the system is not generating RF and to disable processing during this time. Finally, the control panel interface can also send a reset signal to each of the six system microprocessors.

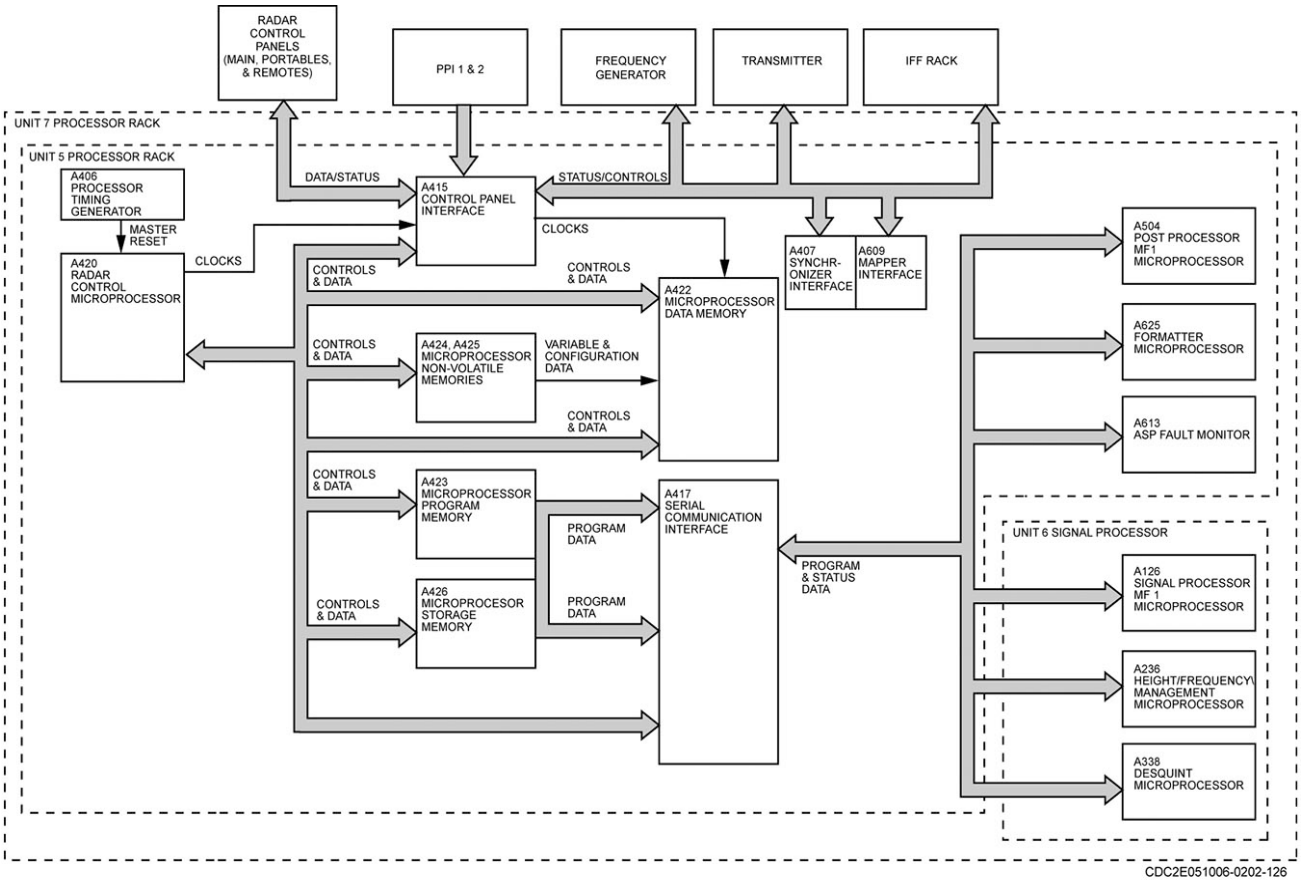

Figure 2–20. Radar initialization and control diagram.

The synchronizer function supplies the radar system with clocks, triggers, and synchronizing signals. The synchronizer consists of the post processor timing generator, the synchronizer interface, azimuth control, and range control circuit cards. The synchronizer is under the control of the RMFI. The DATA MULTIBUS provides bidirectional communications between the synchronizer and the RMFI.

Post processor timing generator

The post processor timing generator produces the numerous system clock signals from the 32 MHz master clock signal provided by the frequency generator. The synchronizer interface then distributes these clock signals, selects azimuth change pulses (ACP) and azimuth reference pulses (ARP), various adjustable triggers and timing signals, and provides synchronization of various functions.

Two timing generators, one in the post processor and one in the signal processor accomplish the synchronization of the post processor and the signal processor. The post processor timing generator is the master and the signal processor timing generator is slaved to it. The post processor timing generator furnishes all the timing signals to the signal processor and then the two align to ensure they are in phase with each other and there are no conflicts in information passed between the two.

Synchronizer interface

The synchronizer interface receives the clocks from the post processor-timing generator; it then produces the additional clock signals needed and distributes them to the six system processors listed earlier. Along with generating these system clocks, the synchronizer interface generates indicator zero trigger, and the STC, test target and PRF control signals. It also provides for the adjustments of the transmitter, SIF and Mode 4 trigger through operator inputs made on the RCP. The synchronizer interface selects between test and actual ACPs and ARP (North Mark) signals and has the ability to select the particular IFF/SIF modes interrogated. Lastly, it controls the time period of the system test cycle monitoring and fault isolation (MFI). To include the bidirectional communication of data between the internal data bus on the synchronizer interface and the post processor MFI microprocessor multibus.

Range control function

The range control function generates range event triggers and controls the selection of PRT modes. The range event triggers (used throughout the radar systems processing sections) activate, select, or control the radar transmission mode and range related functions. The range control function also selects and applies PRT modes to the signal processor timing and control function. The radar can operate in any of three PRT modes: fixed, staggered, or burst. The operator selects the burst mode manually when they believe that the radar is experiencing second-time-around clutter.

Azimuth control function

The azimuth control function generates azimuth events signals for the control of azimuth-related functions. Some of these include a strobe pulse every 10° and a JATS jump strobe pulse every 405° of antenna rotation. The synchronizer function applies ACPs and ARP to the azimuth control function from the antenna.

You align the AN/TPS–75 antenna to the north electronically, not mechanically. The technician determines the amount of delay required for the ARP to align the antenna to north and inputs it on the RCP. This delay compensates for any misalignment of the azimuth reference pulse generated in the antenna. The delayed ARP is then the true azimuth reference pulse for the system and is used to generate the correct IFF azimuth (BEACON and IFF REFERENCE AZIMUTH), AZIMUTH EVENTS, 10 DEGREES, and JUMP signals. In addition, when used for squint correction, the azimuth control function generates the correct BEAM data, a representation of the radar azimuth). When the slotted waveguide is used, the received radar target is squinted data. Squinted data means that the radar beam is offset from the line perpendicular to the antenna by an angle that changes whenever the transmit frequency changes. This squint angle goes to the azimuth control function to generate the correct BEAM data.

617. Transmitter/frequency generator/driver functions

The AN/TPS–75 transmitter is like nearly every other high-powered transmitter you have seen before. As with other systems, the transmitter is also a weak link in the radar. For this reason, and because much of the transmitter is repairable at your level, you need extensive knowledge in this area. The transmitter/frequency generator/driver functions generate a coded 6.8 μs pulse at 3 MW (peak), centered at 3 GHz with an average PRF of 250 Hz. The transmitter/frequency generator/driver functions divide into RF signal generation, high-voltage modulation and final power amplification, radiate control interlock network, and cooling and waveguide pressurization subsystem. Let’s start by discussing RF signal generation.

Radio frequency signal generation

The RF signal generation circuits consist of a frequency generator (unit 2) and driver (unit 4). Figures 2–21 and 2–22 shows the front panel controls for these two units. Together, these circuits produce the coded RF pulse that drives the twystron amplifier.

Frequency generator

The frequency synthesizer takes the binary signals and distributes band and frequency controls to the synthesizer RF module. The RF module then produces the CW STALO signal, which is between 2868 and 3068 MHz. To select a different group of frequencies (A, B, C, or D), just change the FREQ GROUP switch position on the front panel (fig. 2–21).

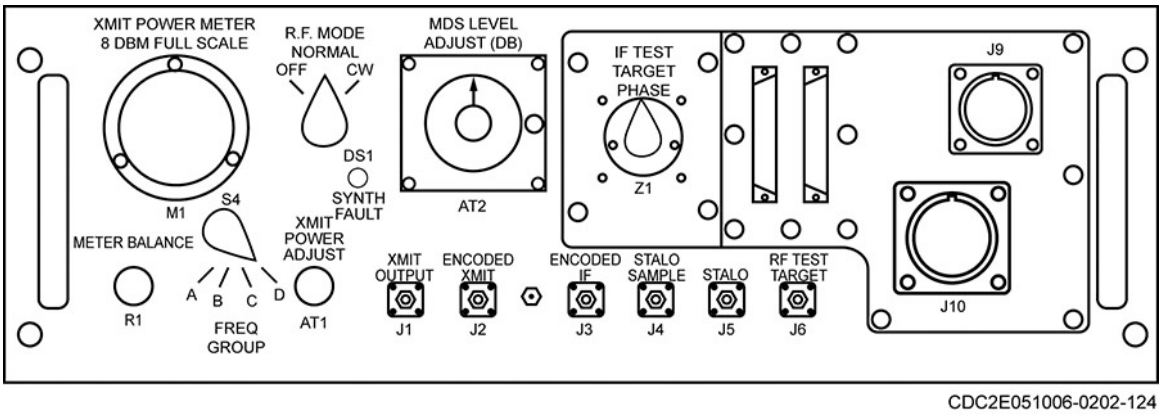

Figure 2–21. Frequency generator front panel.

Driver

The driver amplifies the coded RF output from the frequency generator to the level required to drive twystron 1V1. Within the driver the RF transmits pulse input at the RF IN jack from the frequency generator, is amplified by solid-state CW amplifier A6 and pulsed TWT amplifier V1. The result is a nominal 2.7 kW peak RF PULSE output.

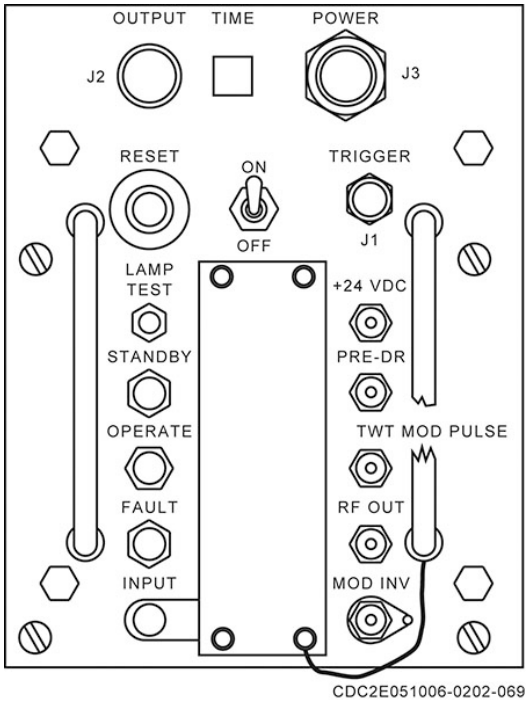

Figure 2–22. Driver front panel.

High-voltage modulation and final power amplification

As with the pulsed TWT amplifier, the twystron final power amplifier (FPA) turns on with a modulating pulse that brackets the RF transmit pulse. The high-voltage pulse used to turn on the beam of the FPA is substantially larger than that used for the TWT. The high-voltage modulator utilizes a high-voltage power supply, a high-voltage charging circuit, high-voltage discharge, and backswing circuits to generate the high-voltage direct current (DC) drive pulse for the FPA. The FPA then amplifies the RF transmit pulse to a peak power of approximately 3 MW.

Radiate control interlock network

The radiate control interlock network consists of relays, switches, and meter-relays that ensure a definite turn-on sequence for the transmitter and protect personnel and equipment in the event any operating condition is not satisfied. The transmitter control panel (fig. 2–23) shows the possible faults in the transmitter.

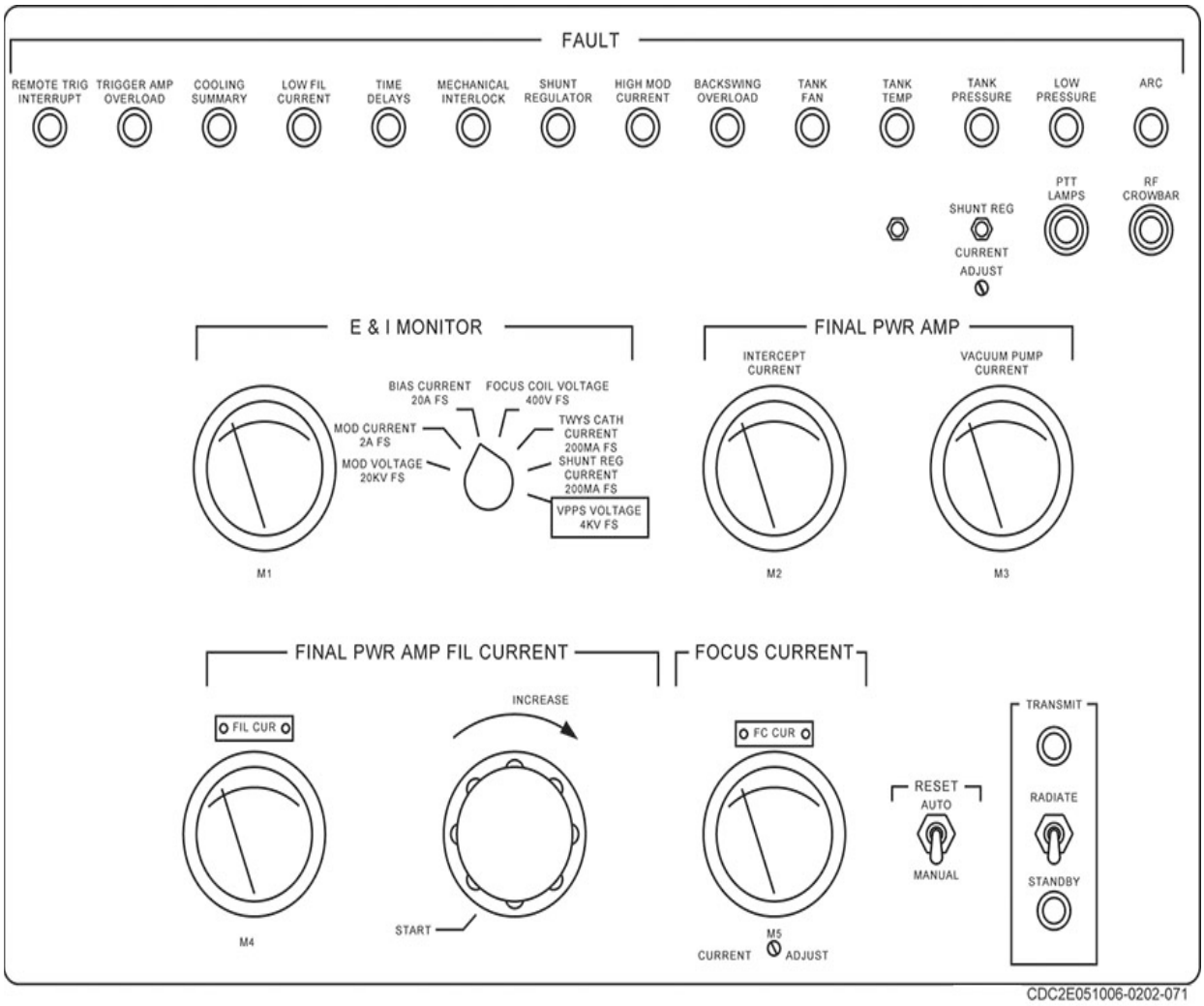

Figure 2–23. Transmitter control panel.

Cooling and waveguide pressurization subsystem

There are two subsystems in the AN/TPS–75, one that provides a cooling mechanism for the system and one that reduces waveguide humidity.

Transmitter coolant system

This is a pressurized closed-loop liquid coolant system with a capacity of seven gallons of coolant. The heat exchanger pump, located outside the shelter (fig. 2–24) delivers nine gallons of liquid coolant per minute to the transmitter. The system requires approximately 45 seconds of heat exchanger operation until the seven gallons of coolant mixture passes through the transmitter units and returns to the reservoir. After the heat exchanger connects to the transmitter via coolant hoses, the coolant system is pressurized to 10 ±2 pounds per square inch (psi). The output flow rate of the heat exchanger is 9.5 gallons per minute ±5 percent at 100 psi minimum pressure. The normal operating temperature of the liquid coolant is between 50 and 148° Fahrenheit (F), which maintains a MAX circuit temperature of 125° F.

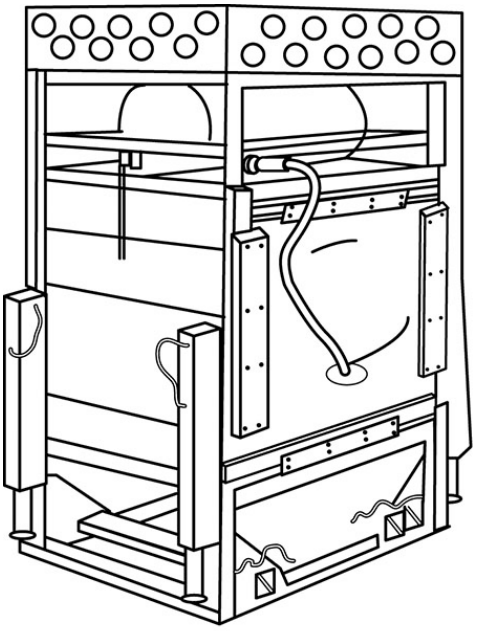

CDC2E051006-0202-111

Figure 2–24. Heat exchanger.

Waveguide pressurization

The waveguide compressor/dehydrator 1A1 supplies dehydrated air under pressure to the radar set waveguide. It bolts to the ceiling of the transmitter compartment. Dry air in waveguide components prevents arcing during normal operation. The waveguide compressor supplies dry air at a greater pressure than that of the atmosphere to prevent moist air from entering the waveguide. The airflow area compresses and dries air for delivery to the waveguide. The electrical area controls operation of the airflow and indicates normal operating conditions or malfunctions.

The waveguide compressor/dehydrator is set to turn on at a pressure of 24 psi or less, and turn off when the pressure in the waveguide increases to 27 psi. An internal timer cycles between the two dehydrator tanks every 90 seconds of operation. Both dehydrator tanks consist of a pressure-type cylinder, containing desiccant for drying the air. The compressor/dehydrator also contains a humidity indicator that changes color with variation in moisture levels. Lastly, a pressure gauge and pressure switch sense the airflow pressure to the waveguide.

618. AN/UPX–37 Interrogator Set

The AN/UPX–37 Interrogator Set is a digital IFF interrogator. It transmits IFF/SIF interrogations and receives replies from the aircraft that are within the radar’s range. To start this lesson let’s discuss the purpose and characteristics of the interrogator set.

Purpose and characteristics

The AN/UPX–37 interrogator (fig. 2–25) detects and processes replies and sends them to decoding equipment. It operates in conjunction with a switchable antenna that changes the mode of operation during P2 time in order to transmit the interrogation side-lobe suppression (ISLS) pulse in an omnidirectional antenna pattern.

The AN/UPX–37 Interrogator Set operates under a wide range of conditions: temperatures from –28 to +65° Celsius (C), humidity from 0 to 95 percent, and elevations up to 12,000 ft. Input voltage requirements are 95 to 125 VAC, single phase, at 50 or 60 Hz. Frequencies are standard for IFF, transmitting at 1030 MHz and receiving at 1090 MHz. Transmit output power is variable from 250 W to 4000 W in a combined configuration, and 250 W to 2000 W in a separate configuration. The AN/UPX–37's receiver sensitivity is –84 dBm.

As shown in FO–3, the AN/UPX–37 Interrogator Set consists of the chassis, associated hardware, and the following replaceable modules: microprocessor A1, coder timing A5, digital video processor (DVP) defruiter A6, power supply A7, receiver/modulator A8, transmitters A9 & A10, RF I/O module A11, motherboard A12, and data entry device A13. Optional connections are also available for Mode S, Mode 5, and target data extractor functions. Reference FO–3 for the following discussion of AN/UPX–37 Interrogator Set modules and interconnections.

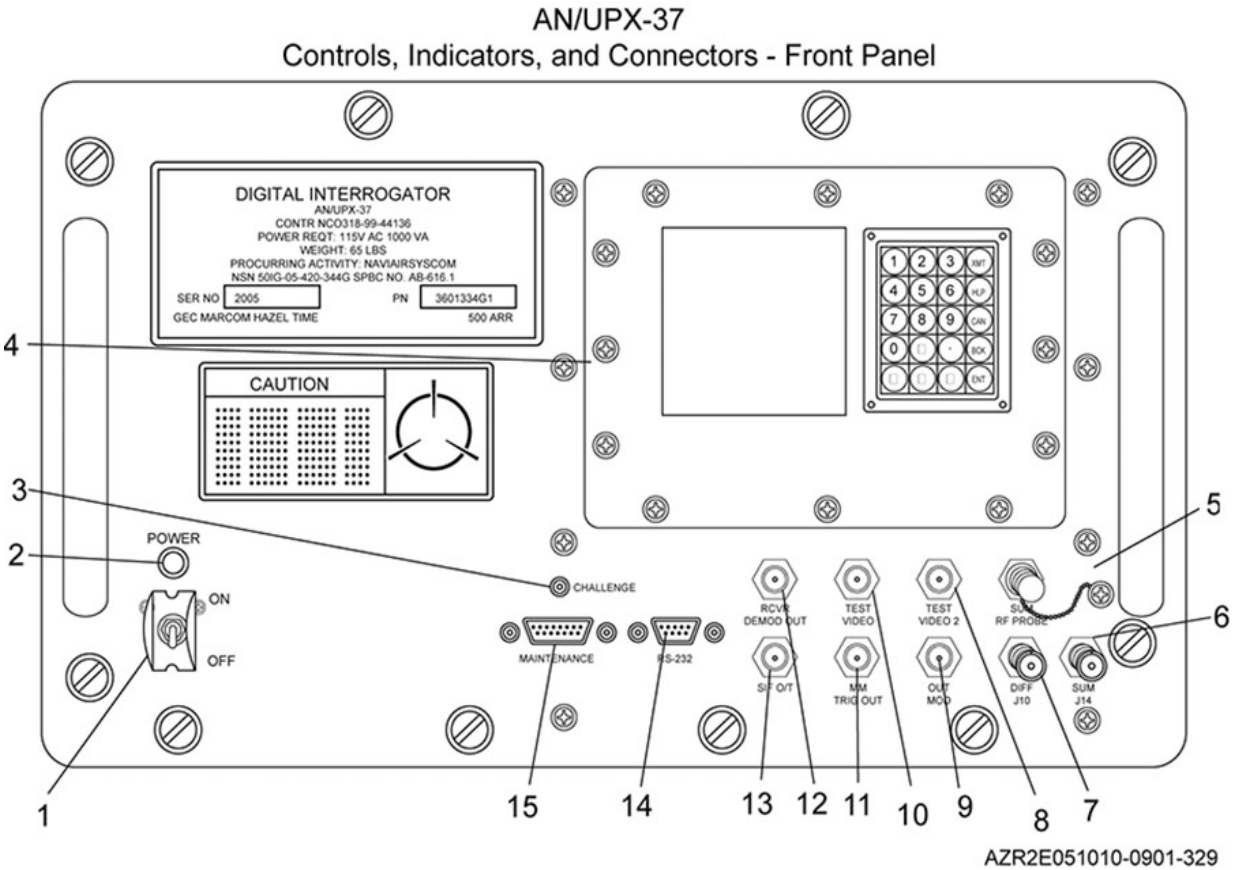

Figure 2–25. AN/UPX–37, front panel.

Microprocessor A1

The microprocessor A1 is the key module of the AN/UPX–37. The front panel data entry device A13 allows user interface with microprocessor A1 during local control of the interrogator. The A1 communicates with and controls the coder timing A5 circuit card and DVP defruiter A6 via the VME bus (FO–3). A1 functions includes system initialization, system built-in test, system fault isolation, front panel keypad entry and display control, serial system control, and control execution.

Built-in test

Extensive built-in-test (BIT) functions provide greater than 98 percent fault detection. It also provides fault isolation for up to three replaceable modules (candidates) to correct at least 95 percent of possible faults. The two basic types of BITs are off-line and on-line. Power-up BIT is a variation of off-line BIT with some visual enhancements. The processor runs all three BITs and it builds them from a selection of more than 200 individual tests, which it runs in a prescribed sequence.

The off-line BIT runs automatically at power up and when initiated by the operator. This is referred to as an initiated-BIT (I-BIT). An off-line test stops the AN/UPX–37 from functioning as an interrogator and configures the hardware to allow extensive tests of its internal circuitry. During testing of the transmitter, the output will go up to full power if transmission is not externally muted. It takes up to 60 seconds for the test cycle to complete, after which, the AN/UPX–37 hardware re-initializes and becomes a functioning interrogator again. As a last step, the specific user-defined parameters for operation activate.

The on-line BIT runs continually in the background whenever off-line BIT is not running. Off-line BIT tests that do not interfere with the operation of the interrogator also run in the on-line BIT. On-line BIT can only test the transmitter output if the AN/UPX–37 is not externally muted. The transmitter tests check only for the selected power and for transmitted challenge modes. The on-line BIT measures receiver sensitivity immediately after the end of the receiver gate. It takes approximately 12 seconds to complete the on-line BIT test cycle. The on-line BIT tests and monitors key performance parameters including: RF peak power, voltage standing wave ratio (VSWR), challenge pulse width and spacing, transmitter frequency, receiver sensitivity, and power supply voltages. The BIT only tests the internal circuitry of the AN/UPX–37; however, problems with some external signals can cause BIT faults to occur.

Digital video processor defruiter A6

The DVP defruiter A6 receives video, transmitter, temperature, and detected signals from transmitters A9 and A10 via RF I/O module A11 and receiver/modulator A8. The A5 also receives BIT information from power supply A7. The DVP defruiter A6 provides video processing, defrosting, storage, and recall. DVP defruiter A6 contains a dual channel A/D converter that digitizes the input signal to an 8-bit digital amplitude value.

It normally processes log video from the receiver, but during transmit time and a 1-µs slot at the end of each PRT, it digitizes other parameters such as BIT monitoring. In single receiver configuration, the A/D converter performs single channel (SUM only) conversion of log video to restore transmitted PW, performs gain time control discrimination and anti-jam processing. In the optional dual-receiver configuration, the A/D converter performs dual-channel (SUM and DIFF) conversion of log video, required for receiver side lobe suppression and amplitude monopoles measurement functions.

DVP defruiter A6 digitizes the outputs from RF detectors in module A11 and both transmitters for monitoring by A1. The dual A/D conversion allows simultaneous reading of forward and reverse detectors, giving a true VSWR reading. The DVP defruiter A6 also digitizes temperature data from RF I/O A11 and the transmitters, which A1 uses for power setting correction and BIT functions. During a 1-µs period at the end of the receiver gate, an RF surface acoustic wave (SAW) BIT oscillator in RF I/O module A11 injects a reference signal. The signal is A/D converted and stored. Microprocessor A1 subsequently reads the stored amplitude value and checks that it is within tolerance. Similarly, an RF detector within the RF Saw BIT oscillator is alternately digitized and stored. This allows for isolation of faults between RF I/O module A11 and receiver/modulator A8.

Coder timing A5

Coder timing A5 provides all challenge coding and timing functions for digital interrogator AN/UPX–37. Major functions include challenge mode selection, challenge and suppression generation, trigger processing with output trigger drivers, PRF measurement, and crypto interrogator

interface. All timing comes from one 20 MHz oscillator, which also goes to the DVP defruiter A6 as well as spare card slots.

Transmitters A9 and A10

The transmitters are identical and interchangeable. Each transmitter consists of three subassemblies: control circuit card assembly, driver assembly, and the power amplifier assembly. The control assembly provides interfacing with the digital boards and voltage translation for the RF circuits contained in the other two assemblies. The driver assembly has the RF pulse modulator and first few stages of RF amplification yielding approximately 150 W of power for input to the power amplifier. It contains a class A pulse modulator, which accepts a nominal level of +10.5 dBm from receiver/modulator A8. The power amplifier assembly provides three stages of amplification. Stage 1 of the power amplifier provides 400 W to the stage 1 splitter. The stage 1 splitter divides the RF power for two RF switches. Each RF switch passes the RF signal unchanged or terminates it. Power amplifier stages 2A and 2B drive through attenuators to stage 3A and stage 3B power amplifiers respectively. A summing hybrid combines the outputs of amplification stages 3A and 3B. Stage 3 RF switch hybrid passes the RF signal unchanged or attenuates the signal by 3 dB. The next table describes the four power control settings.

Power Control Settings	
Setting	**Description**
0 dB	Stage 2 RF switches and the stage 3 RF switch pass all power out of module.
3 dB	Stage 2 RF switches pass all power; the stage 3 RF switch attenuates power 3 dB.
6 dB	One stage 2 RF switch opens disabling stages 2A–3A or 2B–3B; the stage 3 RF switch passes all available power. Result is 6-dB overall drop in power.
9 dB	A combination of the 3-dB control provided by one stage 2 RF switch and the 6-dB drop from one stage 2 RF switch results in a 9-dB overall drop in power.

Reducing the voltage supplying the power amplifier assembly of the transmitter provides for fine power control. The nominal voltage is +52 VDC. The voltage is proportionally reduced down to approximately +35 VDC by setting the fine power control from 0 dB (no attenuation) in 0.1 dB steps down to –3 dB (MAX attenuation). By combined coarse and fine adjustment the user can adjust, the power in 0.1 dB steps over 12 dB of range. An RF detector diode (detector 1 and 2) monitors the output of each half of stage. The control card conditions the diode output and sends it to the DVP defruiter A6 for analog-to-digital conversion and reading by microprocessor A1. The final RF OUTPUT signal goes to RF I/O module A11. Transmit control sensor supplies a voltage corresponding to transmitter temperature to DVP defruiter A6.

Radio frequency input/output module A11

RF I/O module A11 interfaces transmitters A9 and A10 and receiver/modulator A8 bidirectionally to the antenna(s). It performs the following seven major functions:

1. Provides receiver preselection functions.
2. Provides a dual-channel transmit/receive switch.
3. Provides low-pass filtering to reduce transmitter harmonic frequency emissions.
4. Provides forward and reverse power-sensing circuitry through directional couplers and detectors.
5. Provides an internal RF Saw BIT oscillator for use during BIT of RF I/O module A11 and receiver/modulator A8.
6. Provides steering and combining circuitry for either two separate transmit antenna outputs or a single combined higher power transmitter output.

7. Provides an RF test coupled output port signal, through cabling to the front panel, that monitors forward transmitter power signal with external equipment or can be used to inject external receive signals into digital interrogator AN/UPX–37.

Receiver/modulator A8

Receiver/modulator A8 performs receiver, local oscillator (LO) synthesizer, and modulator functions. It consists of modulator circuits and a receiver module. The assembly has mounting space and interconnection points to add a second identical plug-in receiver module and Mode 5 modulator/demodulator circuitry. Sum and difference antenna connectors feed the RF I/O module A11 directly, which performs receive/transmit switching.

The first component in the receiver is a low-level limiter feeding a low-noise amplifier (LNA). A low-noise/high-level gain stage follows the LNA. An image filter and mixer follow the low noise/high-level gain stage. A constant-impedance 60-MHz IF band-pass filter follows the mixer. |The remainder of the IF section provides gain and IF filtering along with a programmable variable attenuator that functions as a gain alignment tool and can be stepped in 0.5-dB increments for sum/difference receiver gain balancing (used in dual receiver applications). The last component in the receiver chain is a log video amplifier. The log video output goes to DVP defruiter A6 differentially for noise immunity from other signals on the motherboard.

A phase-locked-loop (PLL) synthesizer LO feeds the receiver mixer. It serves as both the receiver LO and transmitter modulator carrier. The PLL lock-detection signal FREQ REF (BITE) provides built-in-test status of receiver/modulator A8. Microprocessor A1 controls the receiver operation. A1 sets the frequency of the synthesizer, receiver IF gain and difference receiver phase adjustment (for dual channel receiver option).

Power supply function A7

Power supply A7 converts 115 VAC power to provide the digital interrogator AN/UPX–37 with–100, –12, 5, 12, 24, 40, and 52 VDC. A line filter (mounted on the rear panel) prevents harmonics and RF from entering or leaving the AN/UPX–37. The line filter supplies AC to a full wave rectifier that supplies unfiltered DC voltage to two power factor correction input modules. The power factor modules use a high switching frequency zero-crossing boost circuit to increase the voltage to 300 VDC. Eight DC-to-DC converters provide internal operating voltages from the 300 VDC (see bottom left of FO–3 inside power supply A7 box). Two modules provide power for transmitters A9 and A10; the other modules provide low-voltage DC for the remaining circuits. Each module is a zero-crossing switching regulator with independent regulation on each output, internal current limiting, and overvoltage protection. All voltages have independent sense lines to check for the correct voltage. The BITE monitor provides self-test fault indication to microprocessor A1 through DVP defruiter A6. A transformer converts the incoming 115 VAC to 6.3 VAC to power remote controls.

Self-Test Questions

After you complete these questions, you may check your answers at the end of the unit.

614. System purpose and description

1. What functions does the AN/TPS–75 radar set provide simultaneously?

2. What two AN/TPS–75 radar set packages make up the normal complete radar transit configuration?

615. Overall system operation

1. The AN/TPS–75 radar set consists of what three major subsystems?

2. How does the radar derive target height?

3. What is utilized in the system to alleviate the excessive heat buildup of generating a high power transmitter pulse?

4. What system component receives the digital target returns from the IF receiver and generates the required videos and height data?

5. What do the AN/UYQ–27 indicators display?

6. What do the IFF/SIF replies correlate with in the IFF/SIF subsystem?

7. Name the five modes of communication in the communication subsystem.

616. Radar initialization and control functions

1. Explain what occurs during radar initialization.

2. What supplies the radar system with clocks, triggers, and synchronizing signals?

3. With what three PRT modes can the AN/TPS–75 operate?

4. What PRT mode should the operator select when they believe that the radar is experiencing second-time-around clutter?

5. Is the AN/TPS–75 antenna aligned to the north mechanically or electronically?

617. Transmitter/frequency generator/driver functions

1. What is the peak power output of the AN/TPS–75 transmitter?

2. What circuits produce the coded RF pulse that drives the twystron amplifier?

3. Why is dry air necessary in waveguide components?

618. AN/UPX–37 Interrogator Set

1. What are the transmit and receive frequencies for the AN/UPX–37 Interrogator Set?

2. How accurate are the built-in-test functions of the AN/UPX–37?

3. Name four processes the DVP defruiter A 6 provides.

4. How many stages of amplification does the power amplifier assembly provide?

5. What module provides receiver preselection functions?

Answers to Self-Test Questions

605

1. An operations trailer and a radar trailer.
2. Approximately 100 ft.
3. 60.
4. 200.
5. PAR indicator.

606

1. Autonomous mode.
2. Three.
3. (1) Transmitter group.
   (2) Antenna group.
   (3) Receiver group.
   (4) Processor group.
   (5) Indicator group.

4. By changing the phase of energy radiated by a collinear array of dipoles on the antenna.
5. Two PAR receivers, a waveguide transfer switch, and the associated waveguides and circuitry.
6. A second processor.
7. 25,000 ft.
8. Eight.
9. A PROCOM–2000 switching system, two communications displays, radio group 1, radio group 2, a UPS +28VDC power supply, and two multi-frequency antennas.

607

1. The AN/TPN–24 ASR, and the AN/TPN–25 PAR.
2. A combination of the OK–235/T and the operations B (OPS B) communications control group (OK–236/T).
3. 10 miles.

608

1. 60 nmi.
2. 200 nmi.
3. 10 nmi.
4. Between 2.7–2.9 GHz.
5. Both channels (two transmitters and receivers) operate simultaneously at different frequencies while sharing the same antenna.
6. (1) Normal.
   (2) Coherent MTI.
   (3) Noncoherent MTI.
7. 12.
8. Multiplexing and demultiplexing.

609

1. Course line, glide slope, range, decision height, safety zone, and approach history over a three-minute interval.
2. Six.
3. AN/GPN–22 PAR.
4. 48.
5. As a right-hand polarization pattern for the returned radar echoes.
6. Through the reinforcement of nodes and antinodes in the RF energy waves originating from adjacent elements in the array.
7. MTI and normal receiver circuits.
8. The TDC.
9. Radar power, frequency, PRF, range tracking capabilities, receiver bandwidth, and minimum discernible signal.
10. The SIG GEN position.

610

1. Seven hours.
2. Each PPI can function as either an ASR or PAR indicator with the push of a switch.
3. Ten minutes.
4. Refers to the major system.
5. OPS B air conditioner control.

611

1. Primary radar is a pulse out and pulse back system but the secondary radar transmits two pulses out and receives back a coded reply from an aircrafts' transponder.
2. RPT.
3. The transmit frequency is 1030 MHz the receive frequency is 1090 MHz.

612

1. (1) Mode 1.
   (2) Mode 2.
   (3) Mode 3/A.
   (4) Mode C.
2. Mode C.
3. The time between P1 and P3.
4. Mode 3/A.

613

1. (1) Request a particular mode of interrogation.
   (2) Select the display of aircraft within certain altitude limits.
   (3) Select up to 10 discrete identity display combinations.
2. Indicator Control C–8625/T (A-Box).
3. Interrogator Control C–9684/T (B-Box).
4. Secondary radar display will be lost.
5. The C-Box is used with the fixed radar configuration using the OD–153 PPI.

614

1. Range, azimuth, height, speed, and IFF/SIF information on aircraft for a radius of 240 nmi.
2. A shelter and an antenna pallet.

615

1. (1) Search radar subsystem.
   (2) IFF/SIF subsystem.
   (3) Communications subsystem.
2. By using a stacked beam antenna and multiple receivers.
3. A heat exchanger.
4. The signal processor.
5. Radar surveillance and ground control intercept signals.
6. With the radar returns.
7. (1) UHF radio.
   (2) HF radio.
   (3) Six-channel troposphere radio.
   (4) Telephone.
   (5) Intercommunications.

616

1. Loading variable parameters and configuration data from nonvolatile memories into a volatile data memory and loading of the programs and downloaded variable parameters from program and storage memories into the six individual system microprocessors.
2. The synchronizer function.
3. (1) Fixed mode.
   (2) Staggered mode.
   (3) Burst mode.
4. Burst mode.
5. Electronically.

617

1. 3 MW.
2. A frequency generator and a driver.
3. It prevents arcing during normal operation.

618

1. The transmit frequency is 1030 MHz the receive frequency is 1090 MHz.
2. Greater than 98 percent fault detection.
3. (1) Video processing.
   (2) Defruiting.
   (3) Storage.
   (4) Recall.
4. Three stages of amplification.
5. RF input/output module A11.

Unit Review Exercises

Note to Student: Consider all choices carefully, select the *best* answer to each question, and *circle* the corresponding letter. When you have completed all unit review exercises, transfer your answers to the Field-Scoring Answer Sheet.

Do not return your answer sheet to AFCDA.

14. (605) The AN/MPN–14K Landing Control Central (LCC) consists of what two trailers?
    a. Operations (OPS) and radar.
    b. Radar and surveillance.
    c. Radar and maintenance.
    d. OPS and surveillance.

15. (605) What is the maximum radius, in nautical miles (nmi), that each AN/MPN–14K Landing Control Central (LCC) airport surveillance radar (ASR) indicating position can display the radar and video mapper data required to locate and observe aircraft?
    a. 60.
    b. 100.
    c. 160.
    d. 200.

16. (605) When using the identification, friend or foe (IFF) equipment in the AN/MPN–14K Landing Control Central (LCC), each airport surveillance radar (ASR) indicating position can locate aircraft up to a maximum radius of how many nautical miles (nmi)?
    a. 60.
    b. 100.
    c. 160.
    d. 200.

17. (606) The AN/MPN–14K Landing Control Central (LCC) consists of which two distinct radar systems?
    a. Precision approach radar (PAR) and moving target indicator (MTI).
    b. PAR and ground controlled approach (GCA).
    c. Airport surveillance radar (ASR) and PAR.
    d. ASR and GCA.

18. (606) In the precision approach radar (PAR) transmitter group of the AN/MPN–14K Landing Control Central (LCC), the waveguide switch connects one transmitter to the antenna and the other transmitter to the
    a. circulator.
    b. waveguide.
    c. dummy load.
    d. transmission line.

19. (606) To generate the radio frequency (RF) pulses, airport surveillance radar (ASR) transmitters in the AN/MPN–14K Landing Control Central (LCC) use
    a. triggers from the precision approach radar (PAR) processor.
    b. triggers from the ASR processor.
    c. a detected sample from the PAR receiver.
    d. a detected sample from the ASR receiver.

20. (606) Which degree range can the AN/MPN–14K Landing Control Central (LCC) airport surveillance radar (ASR) antenna be tilted?
    a. 0 to +10.
    b. +10 to +20.
    c. +20 to +30.
    d. +20 to +45.

21. (606) Which AN/MPN–14K Landing Control Central (LCC) airport surveillance radar (ASR) trailer utilizes transceivers?
    a. Radar.
    b. Operations (OPS).
    c. Maintenance.
    d. Communications.

22. (607) When deploying either AN/TPN–19 Landing Control Central (LCC) configurations, what is the *maximum* distance, in miles, that the radar and operations (OPS) shelter can be separated?
    a. 5.
    b. 10.
    c. 15.
    d. 20.

23. (608) What is the range, in nautical miles (nmi), of the search radar in the AN/TPN–24 Airport Surveillance Radar (ASR)?
    a. 60.
    b. 100.
    c. 160.
    d. 200.

24. (608) What is the range, in nautical miles (nmi), of the air traffic control radar beacon set (ATCRBS) in the AN/TPN–24 Airport Surveillance Radar (ASR)?
    a. 60.
    b. 100.
    c. 160.
    d. 200.

25. (608) The separation distance *must* be less than how many miles, between shelters when using fiber optic cable to remote AN/TPN–24 Airport Surveillance Radar (ASR) signals?
    a. 1.
    b. 2.1.
    c. 2.7.
    d. 10.

26. (609) How many packages does the AN/TPN–25 Precision Approach Radar (PAR) have during transport?
    a. 1.
    b. 2.
    c. 3.
    d. 4.

27. (609) What is the *maximum* number of tracked aircraft the AN/TPN–25 Precision Approach Radar (PAR) can process at one time?
    a. 5.
    b. 6.
    c. 7.
    d. 8.

28. (609) The AN/TPN–25 Precision Approach Radar (PAR) transmitter multiplies the different incoming waveforms by a factor of
    a. 5.
    b. 10.
    c. 20.
    d. 48.

29. (609) What computes angle error data and provides corrective data to the antenna beam position control circuits in the AN/TPN–25 Precision Approach Radar (PAR) track video circuits?
    a. Digital moving target indicator (MTI).
    b. Target data computer (TDC).
    c. AN/UPM–145 Radar Test Set.
    d. Phased array antenna.

30. (609) When using the AN/UPM–145 Radar Test Set, which step would you take if you are connecting to a radar with a max power over +50 decibel milliwatts (dBm)?
    a. Use an amplifier to boost the overall input power.
    b. Use attenuators to reduce overall input power.
    c. Increase the RANGE selector.
    d. Reduce the RANGE selector.

31. (609) When using the AN/UPM–145 Radar Test Set, which MODE switch selection helps you ensure that the set is operating properly prior to any other operation?
    a. SELF TEST.
    b. ZERO TEST.
    c. TEST CONFIG.
    d. ZERO CONFIG.

32. (610) In the event of a prime power failure, how many minutes does the internal battery in the AN/TPN–19 Landing Control Central (LCC) operations (OPS) A and OPS B shelter allow a full power load for certain transceivers, communications control equipment, and lighting?
    a. 5.
    b. 10.
    c. 20.
    d. 30.

33. (611) When the AN/TPX–42A Secondary Surveillance Radar (SSR) transmits two pulses out, it should receive back
    a. a coded reply from an aircraft transponder.
    b. a single interrogation pulse.
    c. challenge video pulses.
    d. the same two pulses.

34. (611) What are the transmit and receive frequencies of the AN/TPX–42A Secondary Surveillance Radar (SSR)?
    a. Transmit 103.0 megahertz (MHz), receive 109.0 MHz.
    b. Transmit 109.0 MHz, receive 103.0 MHz.
    c. Transmit 1030 MHz, receive 1090 MHz.
    d. Transmit 1090 MHz, receive 1030 MHz.

35. (612) Which AN/TPX–42A Secondary Surveillance Radar (SSR) interrogation mode is continuously operable?
    a. Mode 1.
    b. Mode 2.
    c. Mode 3/A.
    d. Mode C.

36. (612) The mode in the AN/TPX–42A Secondary Surveillance Radar (SSR) that has the *highest* priority in the interlace sequence is
    a. mode 1.
    b. mode 2.
    c. mode 3/A.
    d. mode C.

37. (613) Which action is *not* a function that a controller can perform with the Indicator Control C–8625/T (A-Box)?
    a. Request a particular mode of interrogation.
    b. Select display of aircraft within certain altitude limits.
    c. Select up to 10 discrete identity display combinations.
    d. Reduce the maximum range of processing time in the video signal processor.

38. (613) The *main* difference between the Indicator Control C–8625/T (A-Box) and the Indicator Control C–10501/T (C-Box) is that the C-Box
    a. is used with a fixed radar configuration using the OD–153 Plan Position Indicator.
    b. allows decreased target load and selection for system optimization.
    c. allows the chief controller to set the barometric setting switches.
    d. allows the chief controller to override a range error.

39. (614) The complete AN/TPS–75 Aircraft Control and Warning System consists of how many packages in the normal transit configuration?
    a. 1.
    b. 2.
    c. 3.
    d. 4.

40. (615) Which *major* subsystem of the AN/TPS–75 Aircraft Control and Warning System determines the position of *all* aircraft within its surveillance area by transmitting a high-power pulse and then receives and decodes the reflected energy from the target?
    a. Search radar.
    b. Communications.
    c. Local control interface group.
    d. Identification, friend or foe/selective identification (IFF/SIF) feature.

41. (615) Which term describes the signal that is used by the AN/TPS–75 Aircraft Control and Warning System for mixing with the target returns, and is equivalent to the transmit frequency minus 32 megahertz (MHz)?
    a. Frequency generator.
    b. Side lobe reference (SLR).
    c. Stable local oscillator (STALO) frequency.
    d. Coherent local oscillator (COHO) frequency.

42. (615) The component used to cool the AN/TPS–75 Aircraft Control and Warning System radar transmitter is the
    a. heat exchanger.
    b. fan module FL2.
    c. pressurized waveguide.
    d. extra air conditioner designed solely for the transmitter.

43. (615) How many intermediate frequency (IF) receivers does the AN/TPS–75 Aircraft Control and Warning System have?
    a. 4.
    b. 7.
    c. 8.
    d. 12.

44. (615) Which AN/TPS–75 Aircraft Control and Warning System component computes the HEIGHT DATA for each target return?
    a. Intermediate frequency (IF) receivers.
    b. Digital height readout panel.
    c. External modems.
    d. Post processor.

45. (615) Which action is *not* a process of the AN/TPS–75 Aircraft Control and Warning System?
    a. Interrogates aircraft identification, friend or foe/selective identification feature (IFF/SIF) transponders.
    b. Decodes IFF/SIF replies for display on the indicators.
    c. Transmits pulse coded IFF/SIF from transponders.
    d. Receives coded IFF/SIF replies.

46. (615) The AN/TPS–75 Aircraft Control and Warning System intercommunications mode allows communication between
    a. one operator and two senior weapons controllers.
    b. two operators and one senior weapons controller.
    c. three operators and one senior weapons controller.
    d. three operators and two senior weapons controllers.

47. (616) Which two components of the AN/TPS–75 Aircraft Control and Warning System synchronize timing signals between themselves in order to ensure they are both in phase with each other?
    a. Post processor timing generator and signal processors.
    b. Azimuth change and reference pulse generators.
    c. Synchronization and reference generators.
    d. Synchronization and signal processors.

48. (616) The three pulse repetition time modes the AN/TPS–75 Aircraft Control and Warning System can operate in are
    a. fixed, staggered, or burst.
    b. beacon, staggered, or burst.
    c. fixed, desquint, or target data.
    d. beacon, desquint, or target data.

49. (616) How is the AN/TPS–75 Aircraft Control and Warning System antenna aligned to the north?
    a. Magnetically.
    b. Mechanically.
    c. Electronically.
    d. Automatically in daily initialization.

50. (617) The final power amplifier (FPA) of the AN/TPS–75 Aircraft Control and Warning System boosts the transmit pulse to a
    a. peak of 3 milliwatts (mW).
    b. peak of 3 megawatts (MW).
    c. nominal 1.6 mW.
    d. nominal 1.6 MW.

51. (618) Which AN/UPX–37 Interrogator Set component provides video processing, storage, and recall capabilities?
    a. Coder timer.
    b. Video code processor.
    c. Digital video synchronizer.
    d. Digital video processor (DVP) defruiter.

52. (618) What is the *nominal* volts direct current (VDC) voltage supplying the AN/UPX–37 Interrogator Set power amplifier assembly of the transmitter?
    a. –52.
    b. –35.
    c. +35.
    d. +52.

53. (618) A transformer converts the AN/UPX–37 Interrogator Set incoming 115 volts alternating current (VAC) down to what VAC voltage required to power remote controls?
    a. 3.6.
    b. 6.3.
    c. 36.
    d. 63.

Student Notes

Glossary of Abbreviations and Acronyms

ΔAZ	azimuth error
ΔEL	elevation error
μs	microsecond
∑	sum
A/D	analog-to-digital
AATO	automated air tasking order
ACP	azimuth change pulse
AEF	air and space expeditionary force
AETACS	airborne elements of the Theater Air Control System
AF	Air Force
AFSPC	Air Force Space Command
AMP	amplifier
AOC	air and space operations center
APC	antenna positioning control
ARP	azimuth reference pulse
ART	Air and Space Expeditionary Force Unit Type Code Reporting Tool
ASOC	air support operations center
ASP	array signal processor
ASR	airport surveillance radar
ATCRBS	Air Traffic Control Radar Beacon System
ATO	air tasking order
AWACS	Airborne Warning and Control System
BIT	built-in test
BITE	built-in test equipment
BNC	Bayonet Neill-Concelman
BST	beacon synchronized trigger
C	Celsius
C2	command and control
C4ISR	command, control, communications, computers, intelligence, surveillance, and reconnaissance
CCDR	combatant commander
CFAR	constant false alarm rate
CFP	communications focal point
COCOM	combatant command

COHO	coherent local oscillator
COMAFFOR	commander, Air Force forces
COTS	commercial off-the-shelf
CRC	control and reporting center
CRE	control and reporting element
CRG	contingency response group
CW	continuous wave
D2D	deployment-to-dwell
DATCALS	Deployable Air Traffic Control and Landing Systems
dB	decibel
dBm	decibel milliwatts
DC	direct current
DCAPES	Deliberate and Crisis Action Planning and Execution Segments
DFT	demand force team
DHRO	digital height readout
DMTI	digital moving target indicator
DOC	designed operational capability
DOD	Department of Defense
DRRS	Defense Readiness Reporting System
DRU	direct reporting unit
DVP	digital video processor
E&I	engineering & installation
ECU	environmental control unit
EIS	engineering installation squadron
F	Fahrenheit
FO	foldout
FOA	field operating agency
FPA	final power amplifier
ft.	feet; foot
GCA	ground controlled approach
GCI	ground control intercept
GFM	global force management
GHz	gigahertz
GIG	global information grid
GMRS	global mobility readiness squadron
GMS	global mobility squadron

GTACS	Ground Theater Air Control System
HF	high frequency
HGT/FREQ MGT	height management and frequency selection
hp	horsepower
HVPS	high-voltage power supply
Hz	hertz
I	in-phase
I/O	input/output
I-BIT	initiated-built-in test
IF	intermediate frequency
IFF	identification, friend or foe
IFF/SIF	identification, friend or foe/selective identification feature
ISLS	interrogation side-lobe suppression
JATS	jamming analysis and transmission selection
JFACC	joint force air component commander
JFC	joint force commander
JOPES	Joint Operation Planning and Execution System
JSTARS	Joint Surveillance Target Attack Radar System
kn	knots
KNS	range rate
kV	kilovolt
kW	kilowatt
LCC	landing control central
LMFI	left monitor fault isolation
LNA	low-noise amplifier
LO	local oscillator
LOGDET	logistics detail
LOGFOR	logistics force packaging system
LOGMOD	logistics module
MAJCOM	major command
MANFOR	manpower force packaging system
MAV	micro air vehicle
MAX	maximum
MCE	modular control equipment
MEFPAK	manpower and equipment force package
MFI	monitoring and fault isolation

MHz	megahertz
MICROSEC	microsecond
MIG	modular control equipment interface group
MISCAP	mission capability
MTI	moving target indicator
MW	megawatts
nmi	nautical miles
NSN	national stock number
OPS	operations
PAR	precision approach radar
PAS	personnel accounting symbol
PBX	private branch exchange
Pd	probability of detection
PIDP II	programmable indicator data processor
PLL	phase-locked-loop
PPI	plan position indicator
pps	pulses per second
PRF	pulse repetition frequency
PRT	pulse repetition time
psi	pounds per square inch
PTT	push-to-talk
PULSE	pulse modulated
PW	pulse width
Q	quadrature-phase
R/A	request/acknowledge
RABM	range azimuth beacon monitor
RAPCON	radar approach control
RAU	request and acknowledge unit
RAWS	Radar, Airfield & Weather Systems
RCP	radar control panel
RF	radio frequency
RMFI	right monitor fault isolation
RPM	revolutions per minute
RPT	radar pre-trigger
RSC	radar set control
SAW	surface acoustic wave

SLR	side-lobe reference
SORTS	Status of Resources and Training System
SQW	square wave
SSR	secondary surveillance radar
STALO	stable local oscillator
STC	sensitivity time control
TACAN	tactical air navigation
TACP	tactical air control party
TACS	Theater Air Control System
TAOM	tactical air operations module
TBMCS	theater battle management core system
TDC	target data computer
TUAV	tactical unmanned aerial vehicle
TWT	traveling wave tubes
TX PULSE	transmit pulse
UA	unmanned aircraft
UAV	unmanned aerial vehicles
UDM	unit deployment manager
UHF	ultrahigh frequency
UIC	unit indicator code
ULN	unit line number
US	United States
USAF	United States Air Force
USART	universal synchronous/asynchronous receiver/transmitters
UTC	unit type code
VAC	volts, alternating current
VDC	volts, direct current
VHF	very high frequency
vMPF	virtual military personnel flight
VSWR	voltage standing wave ratio
W	watts
WAN	wide area network
YDS	yards

Student Notes

Student Notes

AFSC 1C853
1C853A 04 1907
Edit Code 01