CDC 1C853A

Radar, Airfield & Weather Systems Journeyman

Volume 3. Fixed Radar Systems

Air Force Career Development Academy
Air University
Air Education and Training Command

1C853A 03 1901, Edit Code 01
AFSC 1C853

Author: MSgt Michael P. Webb
MSgt Troy A. Partin
334th Training Squadron
Radar, Airfield & Weather Systems School (AETC)
334 TRS/ULCA
610 Hangar Road, Building 4214
Keesler Air Force Base, Mississippi, 39534-2030
DSN: 597-3118
E-mail address: 334TRS.ULCA.1C8CDCWriter@us.af.mil

Instructional Systems Specialist: Linda J. Matthews

Editor: Elizabeth Melton

Air Force Career Development Academy (AFCDA)
Air University (AETC)
Maxwell AFB, Gunter Annex, Alabama

Material in this volume is reviewed annually for technical accuracy, adequacy, and currency. For Weighted Airman Promotion System (WAPS) Specialty Knowledge Test (SKT) purposes, the examinee should check the *Enlisted Promotions References and Requirements Catalog* to determine the correct references to study.

THIS IS A FOUR-VOLUME set career development course (CDC) that covers the fundamental career knowledge you need to satisfy the CDC requirements for the award of the 5-skill level in the 1C8X3 Air Force Specialty Code (AFSC).

This volume is divided into two units that explain fixed radar systems in the Radar, Airfield & Weather Systems (RAWS) career field.

Unit 1 covers common fixed radar systems and is divided into four sections. The first section covers the Digital Airport Surveillance Radar (DASR), to include capabilities and limitations of the system. The second section digs into the DASR theory of operation, and the third section describes the Monopulse Secondary Surveillance Radar (MSSR) theory. The last section gives a brief overview of the AN/GPN–22 Precision Approach Radar (PAR). The system's capabilities, limitations, and theory of operation are covered.

Unit 2 focuses on the Standard Terminal Automation Replacement System (STARS) and is divided into two sections. The first section introduces the system and describes a STARS Operational Site. The second section covers workstation descriptions and the Site Support Subsystem (SSS). Theory of operation is explained for the workstations and the SSS.

A glossary is included for your use.

Code numbers on figures are for preparing agency identification only.

The use of a name of any specific manufacturer, commercial product, commodity, or service in this publication does not imply endorsement by the Air Force.

To get a response to your questions concerning subject matter in this course, or to point out technical errors in the text, unit review exercises, or course examination, call or write the author using the contact information on the inside front cover of this volume.

NOTE: Do not use Air Force Instruction (AFI) 38-402, *Airmen Powered by Innovation,* to submit corrections for printing or typographical errors. For Air National Guard (ANG) members, do not use Air National Guard Instruction (ANGI) 38-401, *Suggestion Program.*

If you have questions that your supervisor, training manager, or education/training office cannot answer regarding course enrollment, course material, or administrative issues, please contact Air University Educational Support Services at http://www.aueducationsupport.com. Be sure your request includes your name, the last four digits of your social security number, address, and course/volume number.

For Guard and Reserve personnel, this volume is valued at 12 hours and 3 points.

NOTE:

In this volume, the subject matter is divided into self-contained units. A unit menu begins each unit, identifying the lesson headings and numbers. After reading the unit menu page and unit introduction, study the section, answer the self-test questions, and compare your answers with those given at the end of the unit. Then complete the unit review exercises.

Page

Unit 1. Common Fixed Radar Systems 1-1

1–1. AN/GPN–30, Digital Airport Surveillance Radar System Capabilities and Limitations 1-1

1–2. Digital Airport Surveillance Radar Theory 1-5

1–3. Monopulse Secondary Surveillance Radar Theory 1-18

1–4. AN/GPN–22 Precision Approach Radar 1-25

Unit 2. Standard Terminal Automation Replacement System 2-1

2–1. Standard Terminal Automation Replacement System Operational Sites 2-1

2–2. Workstation and Site Support Subsystem Descriptions 2-7

Glossary G–1

Unit 1. Common Fixed Radar Systems

1–1. AN/GPN–30, Digital Airport Surveillance Radar System Capabilities and Limitations... 1–1
401. Primary Surveillance Radar capabilities and limitations 1–1
402. Monopulse Secondary Surveillance Radar capabilities and limitations 1–3
1–2. Digital Airport Surveillance Radar Theory 1–5
403. Technological improvements in the primary Airport Surveillance Radar 1–5
404. Primary Surveillance Radar subassemblies 1–9
1–3. Monopulse Secondary Surveillance Radar Theory 1–18
405. Technological improvements in the beacon radar 1–18
406. Monopulse Secondary Surveillance Radar subassemblies 1–21
1–4. AN/GPN–22 Precision Approach Radar 1–25
407. Precision Approach Radar capabilities and limitations 1–26
408. Precision Approach Radar theory 1–26

SOME FIXED RADAR systems in the Air Force have upgraded through the years to become the standard while others provide specialized requirements in support of the Air Force's ever-changing mission. Systems such as the GPN–30 are becoming the standard radar while the older GPN–22, only used at a few bases, has become an integral system for the newer generation of fighter jets. This unit will cover both of these systems, with a more in-depth focus on the GPN–30 since it is one of the most common systems used at fixed airfields throughout the Air Force.

1–1. AN/GPN–30, Digital Airport Surveillance Radar System Capabilities and Limitations

This section introduces you to the AN/GPN–30, commonly called the Digital Airport Surveillance Radar (DASR). The Federal Aviation Administration (FAA) designation for the AN/GPN–30 is Airport Surveillance Radar–11 (ASR–11). The DASR has a Monopulse Secondary Surveillance Radar (MSSR) system, similar in function to an identification friend or foe (IFF) selective identification feature (SIF) system. This unit covers the entire system including transmitter (Tx), receiver (Rx), processor, and IFF.

401. Primary Surveillance Radar capabilities and limitations

The following paragraphs give you an overview and provide some of the primary characteristics, capabilities, and limitations of the Primary Surveillance Radar (PSR).

Primary Surveillance Radar overview

The PSR group consists of a solid-state, eight-amplifier module (Tx) with dual drivers, dual-channel receiver/exciters (REX), dual signal data processors (SDP), site control and data interfaces (SCDI), and a microwave assembly. Monitoring and control capabilities are contained internal to the PSR group (to ensure high availability) and interface to site control and monitoring are external to the PSR group. The PSR includes automatic built-in test and control circuitry. Performance monitoring checks the operation of the PSR and generates appropriate indications of normal operation, marginal operation, and failure. Failures are automatically detected and reported to the site Control and Monitoring System (CMS). The DASR system has both site CMS and MSSR CMS. The MSSR CMS is just one of five points of control. Redundant equipment is automatically reconfigured to maintain the flow of data to the end user under single failure conditions. Functionality exists to monitor the performance of critical radar parameters, which permits the maintenance technician to detect trends by evaluating the performance of the PSR over time. The system provides the status of the critical

radar parameters to the maintenance technician along with internal measurements of Tx forward power, reverse power, and RX sensitivity test signals using calibrated external test equipment.

Primary Surveillance Radar characteristics

The PSR has five cabinets: two cabinets for the dual-channel REX/SDP, two cabinets for the solid-state Tx, and one cabinet for common equipment. These are shown in figure 1–1 below.

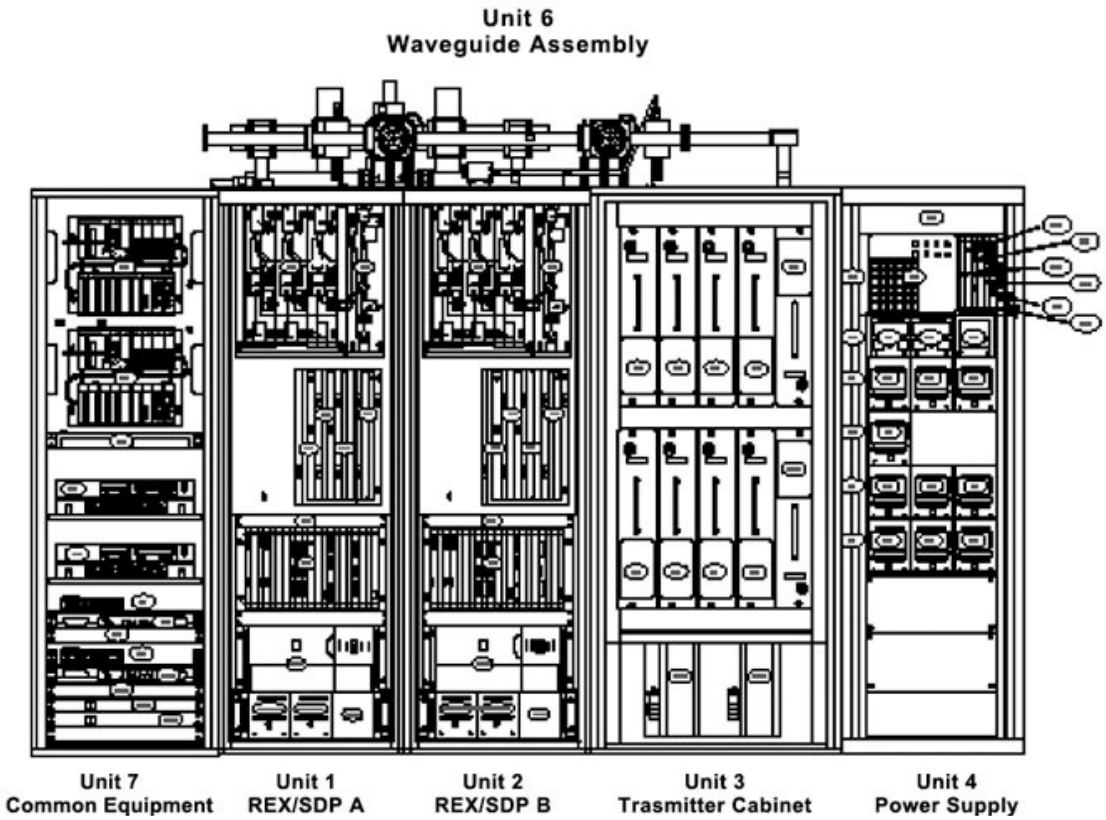

Figure 1–1. Primary Surveillance Radar cabinets.

The table below provides the primary characteristics for the PSR:

Characteristics of the PSR	
Frequency	2700–2900 megahertz (MHz).
Frequency density	(Single channel) dual frequency diversity.
Target range (instrumented)	60 nautical miles (nm).
Resolution (azimuth and range) 80% PR	2.6°, 0.125 nm.
Accuracy (azimuth and range) RMS	0.16°, 275 feet.
Peak power (minimum)	Long pulse: 18.0 kilowatt (kW) (minimum).
	Short pulse: 19.5 kW (minimum).
Transmitted pulse width (PW)	1.8 microsecond (µsec) continuous wave (CW) and 89 µsec frequency modulated (FM) chirp.
Pulse compression	89:1.
Coherent processing intervals (CPI)	4.
Analog to Digital (A/D) Conversion	14-bit.
Doppler filters	5.
Sub clutter visibility	Equal to or less than 42 decibels relative to isotropic (dBi).

Characteristics of the PSR	
Clutter controls clutter map	Sensitivity time control (STC), constant false alarm rate, binary integration, plot edit.
Target capacity	700 tracks or 1,000 plots.
Weather Channel	6-level national weather stations.
Antenna	Gain: 34 dBi (low beam typical). Beam width: 1.46° – 1.49° (low beam). Polarization: circular/linear. High and low beams (both with weather ports). Rotation rate: 12.5 revolutions per minute (rpm) (4.8. seconds per scan).
Power Requirements	30A. 220/380 VAC +/–10%. 3-Phase, 4 wire 47/63 Hertz (Hz) (8-module).

402. Monopulse Secondary Surveillance Radar capabilities and limitations

This topic provides you a brief overview of the MSSR. Following the overview is a snapshot of the primary characteristics of the MSSR.

Monopulse Secondary Surveillance Radar overview

The MSSR group is a Monopulse Beacon System that operates independently from the primary radar. It has two solid-state interrogators configured for dual-channel operation. A single cabinet houses each interrogator and consists of a Tx, a Rx, and MSSR processor. Figure 1–2 shows the two separate interrogator cabinets. System control functions within the processor provide for local/remote control and monitoring facilities. To permit uninterrupted operation, one channel is configured as operational on-line and the other channel is configured operational standby. In the event of a failure in the operational on-line channel, the operational standby channel comes on-line and the faulted channel goes off-line. Duplicate data processing paths cross the channels so that the loss of continuity of service will not exceed four seconds. The CMS within the MSSR provides full control and monitoring capability, which are self-contained within each channel. Functionality within each channel exists to monitor the performance of critical MSSR parameters such as Tx power, reverse power, and Rx sensitivity with smoothing and filtering of the results to prevent a generation of invalid and false reports. Operator maintenance terminals display the status of critical radar parameters.

Figure 1–2. Interrogator cabinets.

Monopulse Secondary Surveillance Radar primary characteristics

The table below outlines the primary characteristics of the MSSR:

MSSR Characteristics	
Power Requirements	
MSSR interrogator	220 VAC, 4.3 A (nominal), 48 – 63 Hz.
CMS with monitor	220 VAC, 2.5 A (maximum), 47 – 63 Hz.
Site monitor	85 – 265 VAC, 145 W (maximum), 45 – 63 Hz.
Transmitter	
Challenge modes	1, 2, 3/A, B, C, and D.
Output power (variable over range)	17.5 – 31.5 dBw (sum channel). 17.0 – 31.0 dBw (control channel).
Center frequency	1030 MHz.
Duty cycle	Constant duty cycle of 1% up to 40^{0}C.
Receiver	
Sensitivity	Better than –90 dBm.
Analog to Digital (A/D) Dynamic range	–16 to –96 dBm.
Center frequency	1090 MHz.
Local oscillator (LO) frequency	1030 MHz.
Intermediate frequency (IF)	60 MHz .
Video output	8-bit digitized for Sum, Difference, and Control @ 16 MHz rate.
Detection	Performance better than 99.5% (Measured as the Plot/Scan ratio for individual tracks, which are neither garbled not effected by topographical obstruction features of the site).
Control and Reporting	
Mode selection. Built-in test equipment monitoring. Status reporting. Target reporting.	

Self-Test Questions

After you complete these questions, you may check your answers at the end of the unit.

401. Primary Surveillance Radar capabilities and limitations

1. What system receives automatically detected Primary Surveillance Radar (PSR) failures?

2. What is the frequency range of the PSR?

3. What is the target range for the PSR?

4. What is the PSR target capacity?

402. Monopulse Secondary Surveillance Radar capabilities and limitations

1. The MSSR has how many interrogators?

2. What is the center frequency of the MSSR transmitter (Tx)?

3. What is the center frequency of the MSSR receiver (Rx)?

1–2. Digital Airport Surveillance Radar Theory

This section will focus on the PSR. The DASR is a huge step in technology from previous Airport Surveillance Radar (ASR) Systems, so covering some theory behind PSR system capabilities compared to past radar systems is important. Finally, we will also explain the major subassemblies that make up the PSR.

403. Technological improvements in the primary Airport Surveillance Radar

In the early days of aviation, air traffic controllers relied on pilots to report their aircraft positions. The controllers monitored the reported positions of all the aircraft in the area. When aircraft were slow and few in number, this system worked; however, when the ground or the airspace around the aircraft were not visible, this system was inadequate. Air traffic control (ATC) radar development for the Army Air Corps happened during World War II. Radar provided the means to monitor aircraft positions and courses continuously without requiring pilot intervention, and poor visibility was less of a problem. The first radar provided guidance to the runways for the fighters and bombers, but ground clutter or returns from surrounding terrain often obscured the radar picture. In 1948, the ground clutter return problem was corrected with the development of moving target indicator (MTI) systems. This eliminated fixed targets (buildings, trees, and mountains). This is just one example of the many problems radar has encountered in its history. The GPN–30's PSR is the first radar system to overcome all of the obstacles radar has presented to technicians over the years.

You may already have a good grasp of how MTI works, but this is a good time to look again at the subject because a solid understanding of MTI will help you understand moving target detection (MTD).

Moving target indicator

You should recall that the basis of the MTI systems is the pulse repetition time (PRT) to PRT detection of a radial velocity, comparing one PRT to the next, and cancelling anything that did not appear to move. Also, recall that MTI has its problems. When an aircraft travels at a certain speed and creates a Doppler shift, the same as the pulse repetition frequency (PRF) of the radar, the aircraft becomes invisible to the radar. This condition is called *blind speed*. Continual improvements introduced staggered PRFs to reduce blind speeds. An aircraft can also produce a Doppler shift that produces little or no output from a phase detector and become invisible to the radar. This condition is called *blind phase*.

The aircraft's speed and angle in reference to the radar site determines its radial velocity (Doppler). Aircraft detection for MTI radars is dependent on the fact that moving aircraft have a radial velocity. Fixed clutter normally has zero radial velocity and is the determining factor for eliminating clutter. Aircraft can have a radial velocity of zero for a short period when they fly tangentially (90°) to the radar. As shown in figure 1–3, when aircraft A enters the hashed circle, it is tangential to the radar

site, has zero radial velocity, and the cancellors in MTI eliminate it. Aircraft B flying right at the radar site has maximum radial velocity and MTI radar systems will detect it as long as it was not flying at a blind speed or its returns were not producing blind phase. There was no solution incorporated into MTI radar systems for the tangential (zero radial velocity) problem and the most effective solution fell to ATC to devise traffic patterns where this problem could be tolerated.

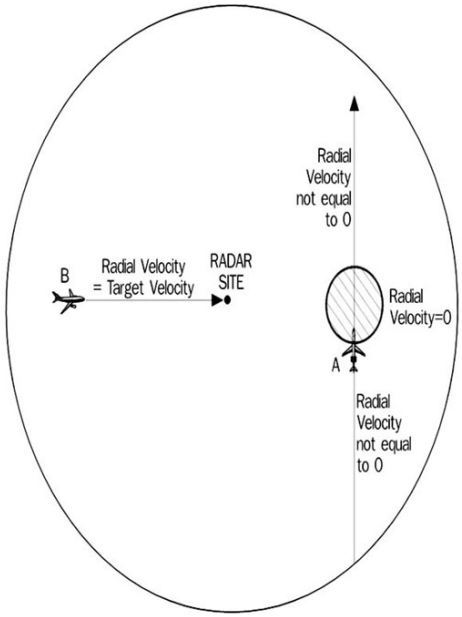

Figure 1–3. Radial velocity.

Moving target detection

For many years, MTI proved to be the best way to eliminate ground clutter. In the 1970s, the FAA and Massachusetts Institute of Technology developed MTD. What made MTD a reality was the advent of the computer and storage media. MTI radar cannot detect an aircraft with a radial velocity of zero, as shown in figure 1–3, but a MTD system will track a zero velocity target, compare it to known clutter, and declare it as a target.

MTD systems have the capability of looking at the zero Doppler returns and comparing them to a map of known clutter in the surveillance area. This “history” map of known clutter is the clutter map. The system will make a determination whether this video return is ground clutter or a target. The MTD system can eliminate targets that do not have the characteristics of aircraft, sort aircraft with different radial velocities (even zero radial velocity), store the data, and compare that with data of the next antenna scan. This system is much more reliable than the MTI system for detecting aircraft, eliminating ground clutter, and eliminating false targets. MTD also provides a means of detecting and eliminating returns from vehicular traffic, which move and often displayed by MTI systems.

With the MTD system, you plot known roadways in the surveillance area and instruct the computer not to start a track over a roadway. An MTD system sorts targets by their apparent Doppler. In other words, a moving target will not have the same video out of a phase detector when compared from pulse recurrence interval (PRI) to PRI. (**NOTE**: In the PSR, you usually refer to PRI instead of PRT, but both terms have the same basic meaning.) This difference is the apparent Doppler the system sorts the video by how much apparent Doppler a return has. The ASR–11 groups the returns from five PRI, which is one CPI, and forms an audio frequency (apparent Doppler) based on the differences in amplitude from PRI to PRI. There are five Doppler filters in the PSR. One is zero Doppler and four more cover different velocities. There are no blind speeds on this system, but there are several dim speeds where probability of detection has noticeable dips. The known dim speeds for this radar occur at 80 knots and 700 knots radial velocity.

Keep in mind that in radar, the radial velocity is relating to a target (fig. 1–3). A target flying directly toward the radar antenna at 100 knots has a radial velocity of 100 knots (aircraft B), but if the same target were flying at a right angle (tangential) to the antenna, (aircraft A) then the radial velocity would be zero; therefore, the Doppler would be zero. Ground clutter has very low apparent Doppler; therefore, the output of the zero Doppler filter is either ground clutter or target data that produces zero Doppler. Outputs from the zero Doppler filter can be a target, and MTD makes the distinction between clutter and targets. If the video has different characteristics than the clutter map shows, then a target is declared. In this case, MTD declares the zero Doppler return as a valid target, and passes the target data on. The outputs of the other four filters are valid targets because they have some radial velocity. However, there are many undesired outputs from these four filters, so there are other procedures within the MTD process to eliminate false target detections from the desired target detections.

Second-time-around targets

The problem of second-time-around targets is shown in foldout (FO)–1, view A. For example, a target at 70 nm could appear as a target at 10 nm in the next PRI if there was no dead time. Second-time-around targets beyond 60 nm are still capable of producing a video return. Staggering the PRI for each CPI, grouping five pulses, and comparing the video CPI to CPI eliminates false targets. A target not within the first 60 nm will wander in range when compared CPI to CPI. This allows the system to identify and eliminate second-time-around returns. The PSR system is capable of eliminating second-time-around targets by staggering the CPI and performing an M of N function. M of N in the PSR system simply means 2 of 4. M and N are variables. In the case of the PSR, 2 is the number assigned to M and 4 is the number assigned to N. The M of N function, commonly referred to as binary integration, means the target must be in the same range cell for two of four CPIs. FO–1, view B is an example of a target that would be located outside of the range of the radar. In this example, say the target is 75 nm from the radar site. Because the target is at 75 nm (927 μsec), you do not want to process or track this target, but the transmit pulse does not just stop at 60 nm (742 μsec). In FO–1, view B, the ghost target appears in CPI 2. Because the PRI for CPI 1 is 1000 μsec, the aircraft appears in CPI 2 at 6 nm (1000 μsec – 927 μsec). In CPI 3 the aircraft appears at 30nm and so on. A second-time-around target wanders in range when compared CPI to CPI.

Unique to the PSR, the M of N (binary integrator) process will look at 4 CPIs at a time, one range cell (1/16 nm) at a time and make a determination if there is a video amplitude in 2 of the 4 CPIs as shown in figure 1–4. Because the target does not appear at the same range CPI to CPI, the M of N (2 of 4) binary integrator will not allow this target to pass. Targets outside of the 60 nm range will wander in range from CPI to CPI and this process will eliminate it. Changing the PRT, every CPI, for 4 CPIs, helps the binary integrator eliminate second-time-around targets.

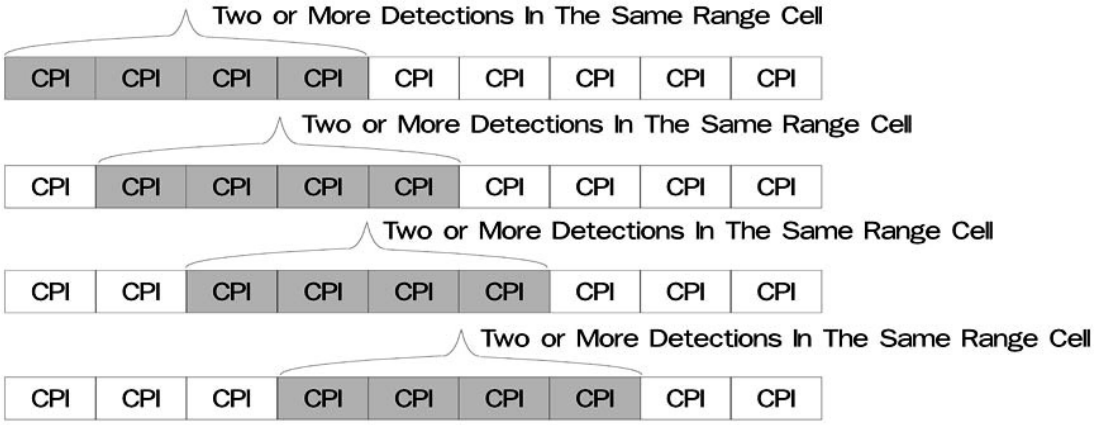

Figure 1–4. Binary integration (M of N).

Solid-state transmitter

Radar Txs must deliver tremendous amounts of power. Older terminal radar Txs produced 500,000 to 1,000,000 watts of power, with a PW of 0.8 µsec to 1µsec. The Tx power must travel from the radar site out to the aircraft, bounce off the skin of the aircraft, and return to the radar site. The first radar Tx power tube was the magnetron, developed during World War II. The magnetron is an oscillator tube that generates its own RF frequency. Magnetrons are very unstable in their frequency generation and made it difficult to eliminate clutter. The klystron uses a synthesis process for frequency generation, which is much more stable. Synthesis radar generates the RF frequency by mixing two oscillator sources, a stable local oscillator (STALO), and a coherent oscillator (COHO). Mixing the STALO frequency and the COHO frequency (30 MHz) provides the final RF frequency. For S-band radar, this is 2700–2900 MHz. The mixed frequency is pulsed and then amplified. Because of developments in Tx, radar systems have gone through several evolutions. Attempts to make a solid-state Tx for radar were mostly unsuccessful because the power limitations of transistors could not meet the high power requirements of radar. It took two solutions to develop a solid-state Tx for radar; multiple amplifier modules and pulse compressions.

Multiple amplifier modules

It was discovered that you could split a transmit signal into many paths, amplify each of the paths, and then phase combine the result. You could increase the transmit PW, which allows for pulse compression in the Rx, which makes up for reduced Tx power. Increasing PW caused range resolution, the ability to distinguish two targets flying at the same azimuth and slightly different ranges, to fall outside of specifications.

Pulse compression

The solution to the range resolution problem is to modulate the transmit pulse with a non-linear chirp or modulate the pulse by frequency modulation (FM). When the pulse returns, you reverse the FM modulation process, producing the effect of receiving a much shorter pulse.

The PSR system uses pulse compression. Pulse compression makes a long 89 µsec pulse look like a short 1-µsec pulse to the MTD process. This compression improves range resolution. Pulse compression also adds 19.5dB (89:1) of gain to the receive signal. By adding the 19.5 dB of Rx gain, an 18-kW (73dBm) Tx can have the same effect as a 1-megawatt (90 dBm) Tx. The Rx pulse compression circuitry makes up for the difference between the output of the two Txs. Because the long pulse is 89 µsec long, the Rx shuts down for 7.2 nm (89 µsec/12.36 µsec per radar mile). Remember that you cannot receive during transmission. To fill in the lost data of the first 7.2 nm, the Tx will transmit a short 1.8 µsec pulse before transmitting the long pulse. The PSR uses the short pulse returns for close range and long pulse returns from 7.2 to 60 nm. The two pulses are on different frequencies. The actual short pulse/long pulse transition takes place at 6.5 nm.

Beam switching

The ASR–11 has dual feed horns at the antenna polarizer providing high and low beam paths. The low beam is the normal radiation beam and is always used to transmit and receive while the high beam is only used for receive. This is similar to the high and low beams in the older AN/GPN–20's PSR.

The high beam is tilted up and is typically used for short range receive. This assists in eliminating clutter. The SDP controls the switchover between high and low beam. Switchover from high to low beam for the PSR normally occurs at the short pulse/long pulse transition point, 6.5 nm. Since the rotary joint has only six paths, three L-band (secondary radar) and three S-bands (primary radar), the weather high/low beam switching must take place at the antenna through control signals at the antenna pedestal. The target channel high/low beam switches at the RF assembly are located in the RX cabinets. The weather channel high/low beam switches are located above the rotary joint since there are only three available S-band lines.

Weather

Unlike older PSR systems, this PSR has two processing channels: one for processing weather and one for target returns. Each REX cabinet contains dedicated weather processing channel for gathering and displaying weather intensity in the coverage area. The antenna (polarizer) separates weather data from aircraft returns and passes it through a separate RF path to a weather Rx/processor. There are six levels of weather sorted by level of intensity measured in dBz (reflectivity factor). The weather Rx/processor separates these weather detections develops a weather map with a resolution of 1.4 degrees by 0.5 nm. Due to processor limitations, it takes six antenna scans (30 seconds) to build a weather map of the coverage area. The National Weather Service defines the following six levels of weather precipitation:

- Level 1: < 0.2 inches per hour.
- Level 2: 0.2 – 1.1 inches per hour.
- Level 3: 1.1 – 2.2 inches per hour.
- Level 4: 2.2 – 4.5 inches per hour.
- Level 5: 4.5 – 7.1 inches per hour.
- Level 6: > 7.1 inches per hour.

404. Primary Surveillance Radar subassemblies

The PSR is made up of several parts and units: the antenna; the common equipment cabinet; the REX and SDP; Tx amplifiers and drivers; power supplies; and the microwave assembly. These major subassemblies will be discussed in the paragraphs below.

Antenna

The antenna, shown in figure 1–5, for the GPN–30 PSR is the same antenna used for the GPN–20 system with some extra bracing to support the secondary surveillance radar (SSR) antenna used for the MSSR. Features of the antenna assembly include the following:

- High beam feed horn for receive only, used to help reduce ground clutter.
- Low beam feed horn for transmitting and receiving.
- Reflector used to focus and shape the RF energy (1.4 degrees).
- Polarizer used to switch between circular/linear polarizations. Switching to circular assists in removing weather returns from the target channel.
- Weather high/low beam switch, helps reduce clutter in the weather channel.

The purpose of the pedestal group is to support and turn the antennas and provide azimuth information. The following are features of the pedestal assembly:

- Two drive motors (antenna only needs one to operate).
- Two azimuth encoders.
- Six-path rotary joint (three S–bands, three L–bands).
- Pedestal control panel (start and stop motors from top of tower).
- Pedestal lubrication system.

Figure 1–5. DASR tower and antenna.

The two redundant incremental optical encoders (X, Y) mounted at the base of the rotary joint are driven by anti-backlash gears. These encoders output 16,384 azimuth change pulses (ACP), 16,384 azimuth quadrature pulses (AQPs–90 degrees out of phase) and one azimuth reference pulse (ARP) per antenna revolution. The system uses AQPs to validate ACPs for a more accurate azimuth count and to ensure clockwise rotation. The encoder outputs go to the facility monitoring and control (FMAC) located in Cabinet 7 where the azimuth distribution unit (ADU) delays the ARP to appear at magnetic north. Align the ARP by manually adjusting dual in-line package (DIP) switches located on the two ADU input modules. The MSSR's remote site monitor (MRSM) is used as a reference while adjusting the DIP switches since its position was surveyed during site installation and the exact ACP count is calculated from magnetic north. This keeps from having to reposition the encoder manually during the north reference alignment.

Unit 7 – Common equipment cabinet

The common equipment cabinet houses several components. There are two FMAC units, which monitor outside peripherals such as engine generator, system uninterrupted power supply (UPS) and the antenna pedestal. Two Sun workstations or SCDI provide the user interface to the system by way of an operator's terminal. The workstations also merge the beacon and primary reports and format the data for transmission to the remote site. Reset relays reset the alternate SCDI by interrupting AC power. Finally, two Media Processing System (MPS)–800 servers provide Ethernet connections from the MSSR into the SCDIs and provide for interface to the radar control panel (RCP) located at the radar site.

Units 1 and 2 – Receiver/exciter and signal data processor

Units 1 and 2 sit to the right of Unit 7. These units provide redundancy for the REX and SDP. Unit 1 is Channel 1 and Unit 2 is Channel 2. The two cabinets have identical lower replacement units (LRU). The cabinets contain all the REX and all of the advanced SDP (ASDP) LRUs. The three identical RX are for high/low weather, target high beam, and target low beam, displayed in figure 1–6. To the right of the three RF Rx is the stability monitor, which injects test targets. All of these LRUs are located at the top of Units 1 and 2. Other components found in Units 1 and 2 are two down-converters (DCON) that generate weather and target digital inphase/quadrature video; one LO that generates all RF, IF, and clock frequencies; and one up-converter (UCON) that generates and RF modulates the Tx pulses. Figure 1–7 shows these components.

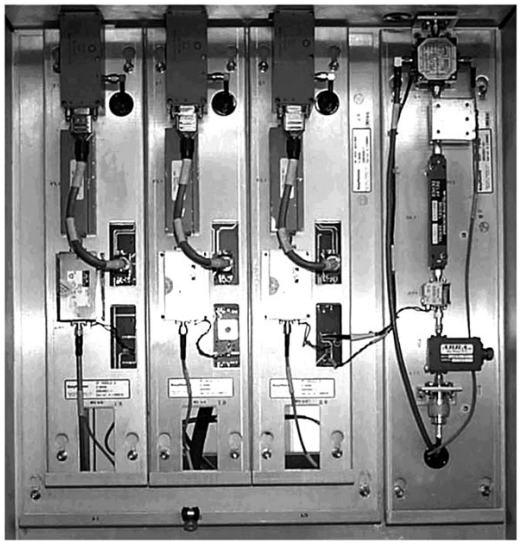

Figure 1–6. Receiver/Exciter.

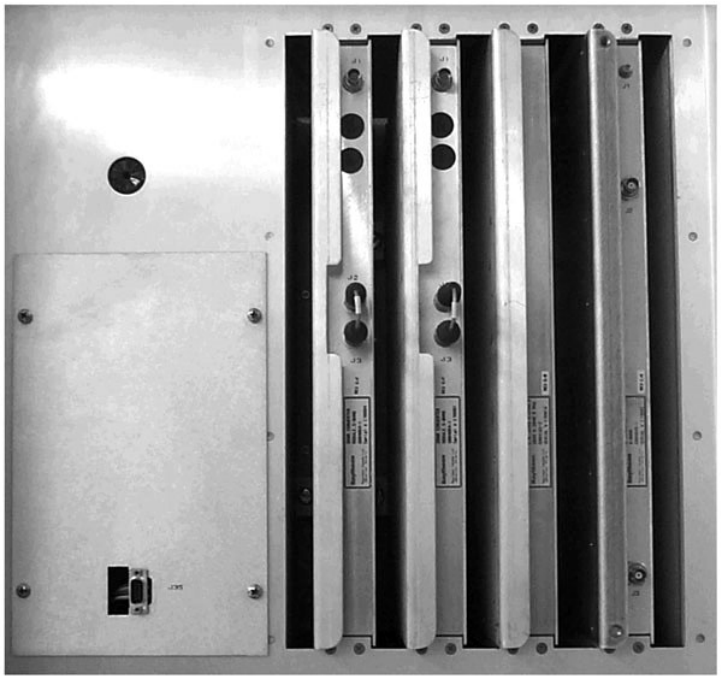

1–7. Down-converters.

Receiver/exciter

The bottom portion of figure 1–8 shows a simple diagram of the Exciter. The Exciter consists of two modules: a LO and UCON. The LO generates crystal-controlled RF outputs in the 3.2 to 3.4 gigahertz (GHz) band, which provide LO signals to the exciter UCON, the target Rx DCON, and the weather Rx DCON. The four frequencies are switched in the LO for the system diversity operation using control signals from the ASDP. Selecting different crystal oscillator sets allows for the changing of the operating frequency. The UCON has a digital waveform generator, which generates an FM chirp and CW pulses at 3.9 MHz. The output RF waveform, consisting of the 2.8µs short pulse and the 89µs long pulse, goes to the Tx.

The support portion of figure 1–8 shows a simple diagram of the Rx. The Rx consists of three modules:

1. Radio frequency (RF) assembly.
2. Target DCON.
3. Weather channel DCON.

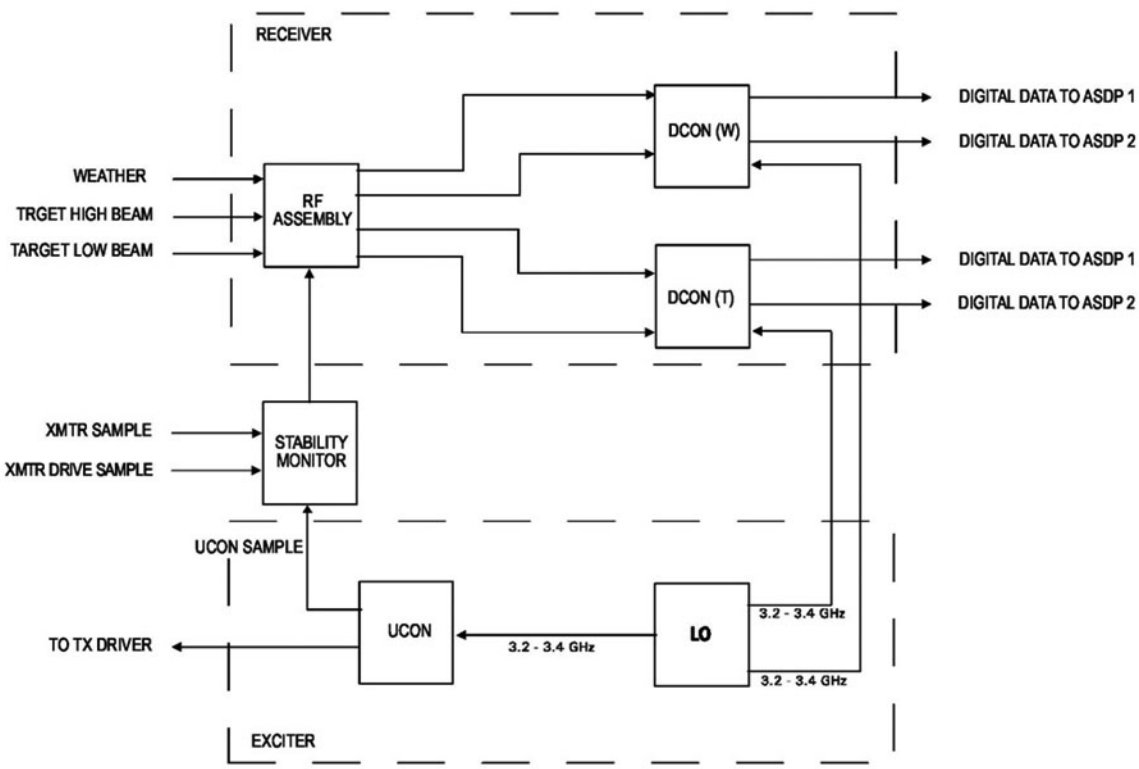

Figure 1–8. Receiver/Exciter block diagram.

Radio frequency assembly

The RF assembly consists of three signal paths for the Target Low Beam, Target High Beam and Weather Beam. The three paths use identical RF components and consist of a digital controlled STC attenuator, a band pass filter and a gain adjustable low noise amplifier (LNA). The programmable STC attenuators in each RF signal path are provided to prevent saturation of the RF, IF, or A/D converter circuits of the Rx, thus ensuring linear operation of the system.

Down-converter

The DCON receives the RF analog signal from the RF assembly and converts it to IF. Then it converts the IF to digital in its A/D circuitry, by direct digital conversion, and sends the data to the ASDP. Direct digital conversion is a technique that uses a single A/D converter to generate both I and

Q data. This technique eliminates phase mismatches and amplitude mismatches that dual A/D designs often produce. The weather channel DCON is identical to the target channel DCON.

Stability monitor

The stability monitor (fig. 1–8) accepts samples from the UCON, the Tx driver, and the Tx. A single-pole, four-throw absorptive switch selects anyone of these inputs. The Rx chain uses the selected signal as a test signal in for stability monitoring and fault isolation.

Advanced signal data processor

The ASDP uses state-of-the art digital processing circuit cards in a multiprocessing Versa Module Eurocard (VME) 64 bus card cage, as shown in figure 1–9**.**

The following table shows the major components and their function:

Component	Function
A1: Single board computer (SBC)	• Binary integration. • Calculates the centroids for clusters of detections. • Establishes track files. • Correlates new plots to existing tracks.
A8: Data signal processor	• Digital pulse compression (target and weather). • Doppler filtering (target). • Constant False Alarm Rate detection and thresholding (target). • Clutter mapping (target). • Weather mapping. • Beam and STC control.
A10: Radar interface circuit card	• Synchronization (timing). • Interface for azimuth, radar, and weather data.

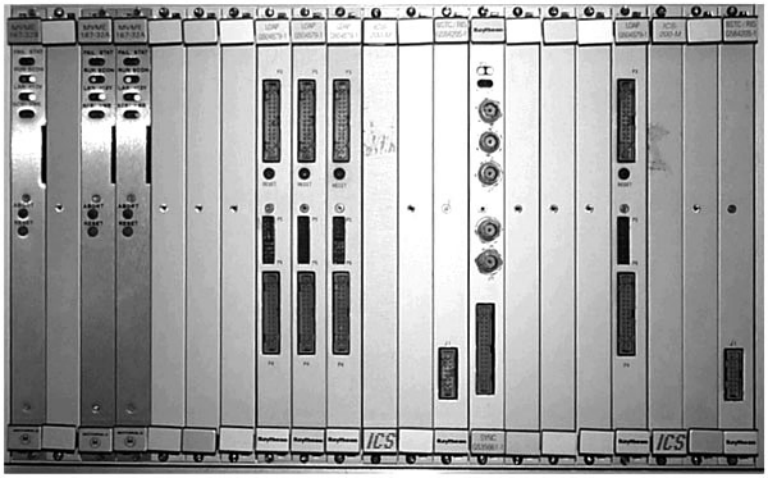

Figure 1–9. VME card cage.

At the bottom of Units 1 and 2 is a UPS, shown in figure 1–10, that provides power to the SDP power supply, which channels SCDI in the event of AC power failure. Also, there are two DC power supplies at the bottom of each unit—one for the SDP and the other for REX. The UPS is capable of

providing power to the SDP and SCDI for 20 minutes. The UPS prevents the technician from having to reload software and generate new tracking data, clutter maps, and adaptive thresholds in the event of a power failure. The two power supplies below the UPS are the SDP power supply (+5, +/–12 Volt) and the REX (+/– 18.5, +/–8 Volt) power supply. The SDP +5 and +/–12 Volt supply is used for the SDP and receives its power from the UPS. All other LRUs located in Cabinets 1 and 2 use the REX +/–18 and 8 Volt supply. The REX +/–18 and 8 Volt supply does not connect to the UPS.

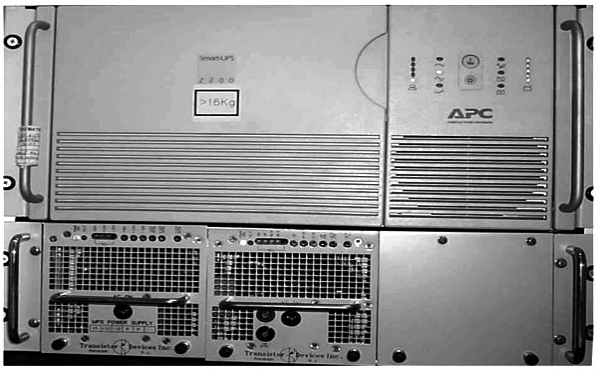

Figure 1–10. UPS/power supplies.

Unit 3 – Transmitter amplifiers and drivers

The Tx cabinet (Unit 3) is to the right of the two REX/SDP cabinets and houses eight Tx amplifier modules (4 of 8 shown in fig. 1–11) and the two driver modules (1 of 2 shown in fig. 1–10). Each REX/SDP channel has a dedicated RF driver. REX/SDP channel 1 (Unit 1) uses RF driver 3A5 and REX/SDP channel 2 uses RF driver 3A10. Either driver can connect to the eight RF amplifier modules. The selected RF driver receives a 20 milliwatt (mW) input. The output of the selected RF driver (approximately 1150 W) passes to the eight RF amplifiers. The outputs from the eight RF amplifier modules combine in a high power waveguide combiner to produce a high power RF signal (18.0 kW minimum) that goes to the microwave assembly (Unit 6) and then to the antenna assembly (Unit 37) for transmission into free space. If one amplifier module fails or is in standby, the remaining seven amplifier modules will provide a minimum of 14kW peak power, which is enough power for 60 nm coverage.

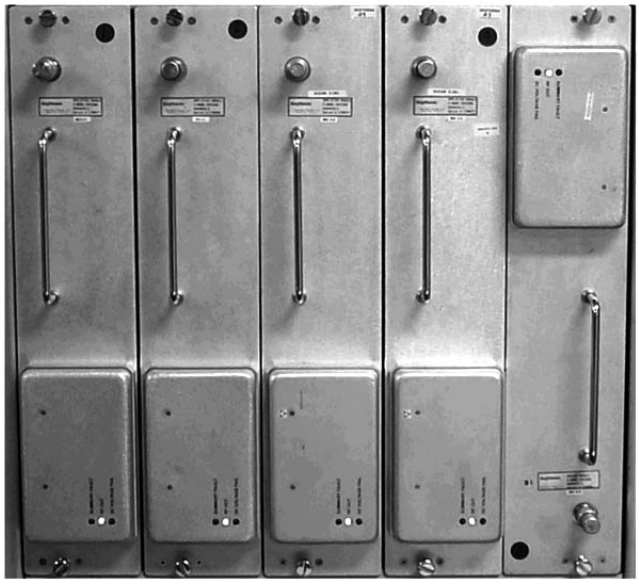

1–11. Tx RF amplifiers and RF driver modules.

Unit 4 – Transmitter power supplies

Transmitter power supply cabinet (Unit 4), displayed in figure 1–12, is the last cabinet on the right and houses power supplies for the eight Tx amplifier modules and two driver modules located in Unit 3. There is a small card cage in the upper right corner of the cabinet that holds the six Tx control maintenance module (TCMM) cards. Three of the cards are for channel 1 and the other three are for channel 2.

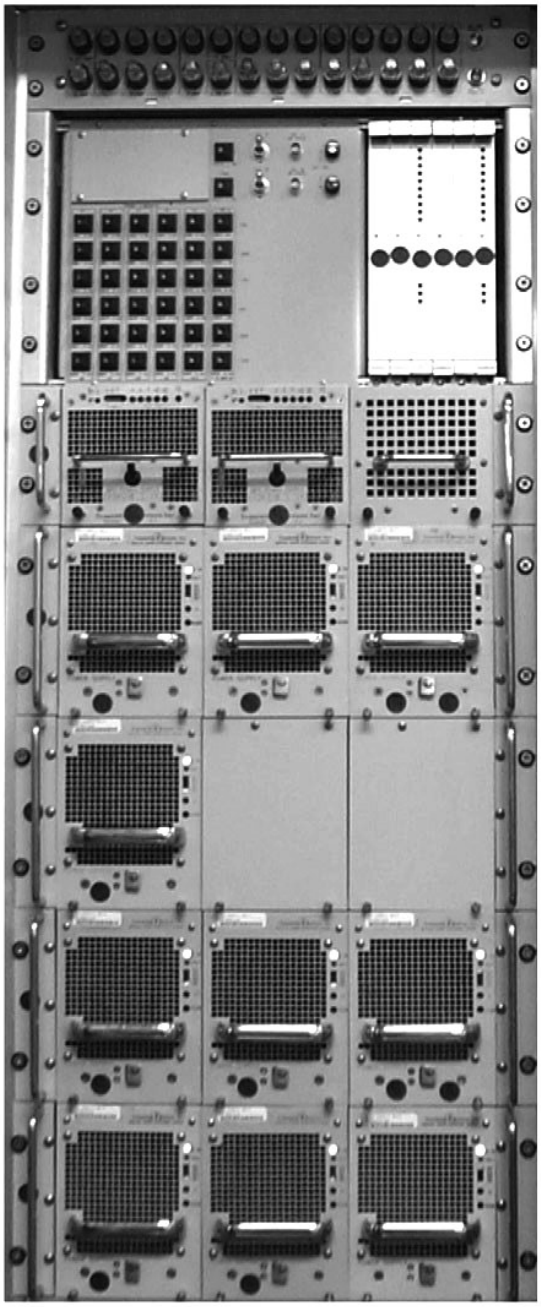

Figure 1–12. Tx power supply.

The following are functions of the Tx control circuit card assembly (CCA):

- Accepts commands from SBC1 by way of the beam azimuth STC card.
- Interfaces on/off commands for the Tx group (drivers, amplifiers, and 36 volt power supply).

- Provides channel change signals for driver select switches 4SW1, target low beam switch 6S1, target high beam switch 6S2 and weather switch 6S3.
- Commands the Tx status CCA to send RF amplifier, RF driver, and 36 VPS status to the SDP.
- Provides an emergency inhibit reset command for the Tx RF monitor CCA. Routes signal RF GATE to enable the drivers and amplifiers.

The Tx RF monitor CCA detects antenna/Tx group voltage standing wave ratio (VSWR), PW, and duty cycle faults and generates an emergency inhibit (EI) signal that disables the RF drivers when needed. It monitors the RF driver, Tx forward and reverse power, and antenna reverse power.

The Tx status cards collect status information from the Tx RF amplifiers, drivers, and power supplies; and format this data for transmission to the SBC. The RF gate, which is an enable signal for the driver and amplifier modules, has two different PW. For a short pulse transmission, the PW is 14.6 µsec and for long pulse transmissions, the PW is 106.6 µsec. The RF gate would turn the modules on a short time before the actual RF pulse arrives, and keep the modules turned on until after the RF pulse has ended.

To the left of the TCMM card cage are DC circuit breakers for output of the power supplies.

Unit 6 – Microwave assembly

Unit 6, shown in figure 1–13, is not a cabinet at all, but a collection of RF components that sit on top of cabinets 1–4. It consists of the following:

- Directional couplers for power sampling.
- Power monitor video detector assembly for power sampling.
- Waveguide switch and coaxial switches for changing channels from A to B or vice versa.
- Receiver protectors (T/R tubes and limiters).
- Duplexer to route Tx RF to the antenna and RF returns to the Rx.
- Assorted power dividers and attenuators.

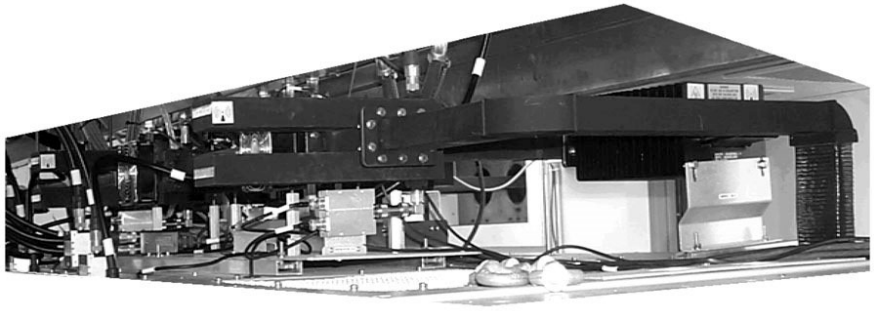

Figure 1–13. Microwave assembly.

The DASR has overcome many barriers that once stood in the way of enhanced radar. You, as a Radar, Airfield & Weather Systems technician, are at less risk now that radar power requirements have been reduced for transmission. Some DASR components were not discussed in detail in this course to conserve space. You have many resources available to you to further your knowledge on the DASR, such as the technical instructions and the experts in your work center.

Self-Test Questions

After you complete these questions, you may check your answers at the end of the unit.

403. Technological improvements in the primary airport surveillance radar

1. What radar technology was developed in 1948 to correct ground clutter problems?

2. Define the term “blind speed”.

3. Define the term “blind phase”.

4. What can a moving target detection (MTD) system track that a moving target indicator (MTI) system could not?

5. What are the known dim speeds for the PSR?

6. How does the PSR system eliminate second-time-around targets?

7. What two solutions helped develop a solid-state (Tx) for radar?

8. Which beam path is the normal radiation beam and is always used to transmit and receive?

9. What are the two types of PSR processing channels?

404. Primary Surveillance Radar subassemblies

1. What is the purpose of the antenna pedestal group?

2. What provides Ethernet connections from the Monopulse Secondary Surveillance (MSSR) into the site control and data interfaces (SCDI) and provide for interface to the radar control panel?

3. What does the stability monitor do?

4. What two components make up the exciter?

5. What technique eliminates phase mismatches and amplitude mismatches that dual A/D designs often produce?

6. What signal is produced when the eight radio frequency (RF) amplifier outputs are combined in a high power waveguide combiner?

7. What detects antenna/Tx group voltage standing wave radio (VSWR) and duty cycle faults, and generates an EI signal that disables the RF drivers when needed?

1–3. Monopulse Secondary Surveillance Radar Theory

This section is an introduction to the MSSR and covers part of the system capabilities compared to past beacon radar systems. Additionally, the discussion gives detailed descriptions of the major subassemblies that make up the MSSR.

405. Technological improvements in the beacon radar

The types of secondary radar (beacon systems) have been around since World War II. This development grew out of a need to identify a radar aircraft target as either *friend or foe*. Subsequently, the term used for the military beacon version is *identification friend or foe*. Originally, allied pilots had assigned codes and used a dial-in type of transponder. These codes changed periodically to protect against duplication by enemy aircraft. With this procedure, ATC were able to positively identify allied aircraft. Beacon systems 3, 4, and 5 are the older types in which the *sliding window* technique develops azimuth information (TPX–42 requires 8–20 pulses). The MSSR is capable of determining an aircraft's azimuth with one pulse and compares that azimuth on a pulse-to-pulse basis for a truer target.

Beacon radar

Before diving into the MSSR, it is necessary to have a brief review of primary and secondary radar and some basic beacon radar principles.

Primary versus secondary radar

There are two major differences between a secondary radar system and a basic (primary) search radar system:

1. Primary radar displays range and azimuth.
2. Secondary radar displays range, azimuth, identity, and altitude.

You may ask, *Why not do away with primary radar?* The difference between a secondary radar system and a primary radar system is that a secondary radar system cannot operate without target cooperation. For an aircraft to reply to an interrogation, it must have an operational transponder capable of responding. Not all aircraft are equipped with transponders, and some transponders may be malfunctioning. In a secondary radar system, a transponder in the aircraft generates the return signals. Beacon radar signal strength is much greater than the reply from a primary radar system.

Consequently, the power required at each end of the link (interrogator and transponder) is much less than is required with a primary radar system. Primary radar transactions use only one frequency, but secondary radar transactions use two different frequencies. The use of two frequencies eliminates clutter caused by direct reflections. Another difference is the strength of the reply (receive) is independent of the strength of the interrogating (transmit) signal. Probably the most important advantage of the secondary radar system over the primary radar system is its ability to provide identification (Mode 3/A) and altitude (Mode C) from transponder-equipped aircraft. The primary disadvantage of the secondary radar system is that only way detection can occur is if the aircraft has an operational transponder (by way of receiving a reply to the interrogation).

Beacon radar basics

The secondary radar equipment interrogates an aircraft's transponder and receives pulse-coded replies via the beacon antenna system. The secondary equipment processes the replies for detection of beacon targets. This system converts the range, azimuth, beacon code identity, and pressure altitude of each target to the proper format for display and use by ATC. The MSSR interrogator is capable of interrogating in four different modes. Normally only two are used, Mode 3/A for identity code and Mode C for altitude. Only use Mode 2 if the interrogator is at a joint use site (FAA and Department of Defense (DOD)). The pulses transmitted out of the directional Sum pattern of the antenna are as follows:

- Mode 2 is two 0.8 μsec pulses spaced 5 μsec apart (military use only).
- Mode 3/A is two 0.8 μsec pulses spaced 8 μsec apart.
- Mode C is two 0.8 μsec pulses spaced 21 μsec apart.

The MSSR uses a fourth mode, Mode B with a spacing of 17 μsec, with remote site monitor (MRSM) to measure the radiation patterns of the antenna. Mode B is for testing purposes only.

New Monopulse Secondary Surveillance Radar technologies

The MSSR has improved upon traditional IFF/SIF and beacon systems. The following paragraphs detail a few of the most important system improvements.

Receiver side lobe suppression

In the GPN–30 MSSR, the Rx uses the control beam. It compares the sum video to control video amplitudes. If the control video amplitude is stronger than the sum amplitude, the processor tags and discards. This should only happen when a target is located in a sum side lobe. This process is called receiver side lobe suppression (RSLS).

No synchronization necessary

The beacon system is a secondary radar system that is normally *slaved* to a primary radar system. There are two reasons for *slaving* a beacon system to a primary radar system: (1) to allow the display of radar and beacon information on a common display or RadarScope and (2) to use the data from both systems to identify positively radar returns as aircraft. *Correlation* is happens when two radars range and azimuth agree. To share a common display, the beacon and primary radar systems must synchronize in range and azimuth. When the two radars transmit at the same time, the video returns from the same aircraft will match in time and in radar propagation, time is range (12.36 μsec/nm). Older systems used the primary radar triggers to obtain range synchronization. These came directly from the primary radar, or counted down, depending on the PRF of the primary radar. Newer digitized systems do not require triggers from the primary radar. The two radars operate independently of each other. The MSSR calculates its own range and azimuth, generates a digital report for each target and sends the data to the primary radar.

Mounting a beacon or secondary radar antenna (large vertical aperture) on top of a primary radar antenna allows for azimuth synchronization. By mounting the two antennas, they always point in the same direction. For azimuth synchronization, both radars count the ACPs generated at the rotary joint

by the azimuth encoders. With digitized beacon and primary radar systems like the ASR–11, synchronization is unnecessary. The two radar systems transmit independent of each other and prepare digital reports with their own calculated azimuth and range. Computers then combine or merge these digital reports, based on the reported range and azimuth, but not on time. Trigger synchronization is not necessary with digital radars. If the two radars do not correlate, the radar reinforcement rate (primary/secondary agreement) for the beacon decreases. This means that one of the radars has an error and it is up to you to determine which one is at fault.

False target elimination

In the surveillance coverage of the MSSR, there should only be one aircraft with a particular discrete 3/A code. Air traffic controllers assign the discrete codes, and it is their job to make sure that no two aircraft in the radar coverage have the same code. A discrete code is a 3/A code with some number other than zero in the last two digits. To explain, a 3/A code of 1200 is considered to be nondiscrete, but 1201 would be discrete.

The computer in the MSSR makes a determination on locating false targets by looking at all aircraft in the surveillance area and ensuring that there are no two aircraft with the same discrete code. If there are two aircraft with the same discrete code, one is real, the other is possibly false, and the computer must determine which one is real. Normally, the target at the longest range is the false one, but the computer can use other factors, such as is the aircraft located in a false target zone. The false target zones are identified when the radar is optimized, locating areas in the surveillance area that are prone to uplink reflections. The system can store up to 64 permanent false target zones in a file called *false target reflectors*.

Antenna patterns and azimuth determination

The biggest change that the MSSR upgraded from older beacon radars was the ability to determine azimuth from one return of the transponder, hence “monopulse” azimuth determination. It does this by using three antenna patterns (Sum, Difference, and Control) instead of two antenna patterns (Sum and Difference) by the older beacon radars (FO–2).

The Sum port is the main beam of the antenna, and it is 2.4 degrees wide. The center of this beam is the *boresight*. This is referring to the angular distance between the target and center of the antenna. The MSSR uses the Sum beam for transmit and receive. The P1 and P3 mode pulses transmit out the Sum port. The system receives replies through the Sum port. The MSSR always knows the pointing angle of boresight because it is determined by counting the number of ACPs from north. There are 16,384 ACPs in an antenna rotation, so looking at the count of the ACPs will tell you what direction the antenna is pointing.

The Difference receive patterns (there are two) are on either side of the Sum beams (FO–3 view A, green lines). The system only uses them for receiving. The two receive patterns are 180 degrees out of phase with each other and are used to determine how far a target is off boresight. The MSSR determines on which side of boresight the target is located by comparing the Difference phase to the Sum phase. To determine how far the target is off boresight, the MSSR compares the Difference video amplitude to the Sum video amplitude. These comparisons are the key components of monopulse azimuth determination.

The Control pattern is almost omnidirectional, except for the distinct notch at boresight. The MSSR uses the control port for both transmitting and receiving. FO–3, view A shows the side lobes from the Sum (black) pattern. The control (red) pattern covers all of the side lobes generated by focusing the Sum pattern. Specifications of the control pattern are at least 10dB greater than the strongest side lobe in the Sum pattern.

You can measure all three antenna patterns by using the antenna pattern measurement (APM) feature built into this beacon system. A command from the CMS terminal initiates APM. The APM works with the MRSM to produce the pattern shown in FO–3, view A. The black line is the Sum, the green

line is the Difference, and the red line is the Control pattern. Notice how the Control pattern is 10dB above the side lobes of the Sum pattern. Also, notice the significant notch in the Control pattern at boresight, 0.0 degrees. The Difference pattern has two distinct lobes with a notch at boresight. This figure is an actual measurement of the beams so you can see the side lobes generated by the sum and difference patterns. FO–3, view B show a 360-degree view of the three antenna patterns.

406. Monopulse Secondary Surveillance Radar subassemblies

Finally, we need to discuss how the major subassemblies of the MSSR work. Secondary radar ground/air equipment is composed of the following major components:

- Transmitter.
- Receiver.
- Plot processor.
- Tracker.

Collectively, these components make up the *interrogator* (previously mentioned in fig. 1–2). In addition to the interrogator itself, there are the following:

- Large vertical array (LVA) antenna.
- Radio frequency changeover (RFCO) unit.
- Control and monitor system (CMS).
- Transponder (located in the aircraft).
- Monopulse Secondary Surveillance Radar remote site monitor MRSM.

The secondary radar data path received signals are processed and combined. The signals are then sent by modem/microwave/fiber optic (F/O) to the remote site, where they are presented on a plan-position indicator to give a visual indication of the aircraft's range, azimuth, Mode 3/A code, and altitude.

Monopulse Secondary Surveillance Radar transmitter

The Tx generates distinctive RF transmissions called *interrogations*. The Tx produces RF bursts (coded pulses) up to 2,000 watts peak power. These pulses go to the antenna for transmission into free space. The secondary radar energy is only required to travel one way (60 nm adjustable to 120 nm for DOD) which is why it is much lower than a terminal primary radar's peak power, normally around 1,000,000 watts, which has to travel to and from the aircraft (120 nm round trip).

The following table shows the major sub-assemblies of the Tx and their function:

Sub-Assembly	Function
Mode Generator	• Generates SSR mode interrogation pluses. • Generates ISLS control pulses. • Modulation control (disables Tx during sector inhibits). • Generates triggers (Internal, external, stagger triggers, etc.).
Driver	• Modulates the interrogation pulses at 1030 MHz (approximately 83 watts). • Provide 1030 MHz LO to the Rx.
Low Duty Power Amplifier	• Amplifies the pulse modulated RF input from the driver to a minimum of 2.95kW. • Develops RF sample video for monitoring. • Senses over-current conditions. • Senses air temperature conditions (Sends a warning message at 40° C (Celsius) fault message at 47° C).

Sub-Assembly	Function
Transmitter Interface	• Separates P2 interrogation pulses from P1 and P3. • Routes the P1 and P3 pulses to the Sum (Σ) port and P2 to the Control (Ω) port to the RF Change-Over Unit. • Directs replies (Sum, Control, and Difference) to the appropriate Rx. • Injects self-test pulse into each Rx. • Provides forward and reverse RF power monitoring.
Fan and Power Supply Unit	• Houses the multivoltage power supply (+/- 15 V, +/- 5 V, +28 V). • Houses the Tx power supply (+52 V). • Houses 4 cooling fans.

Monopulse Secondary Surveillance Radar receiver

The MSSR Rx group consists of the Rx interface and three RF and Rx (one each for Sum, Control, and Difference).

Receiver interface

The Rx interface performs five functions:

1. Divides the 1030 MHz LO from the driver and sends it to the three RF Rx.
2. Phase detects the Sum and Difference IF.
3. Generates the Sign Bit and Confidence Bit for monopulse processing.
4. Automatic phase adjustment to correct for phase differences between Sum and Difference signals.
5. Manual phase offset adjustment for use during system testing.

Radio frequency receivers

The RF Rx mix the 1090 MHz replies with the LO from the Rx interface to create a 60 MHz IF. They then amplify and convert the IF to an 8-bit wide data stream that goes to the Video and Timing Card for processing.

Plot processor

The plot processor groups replies from the same aircraft and produces a digitized report. The report contains the aircraft's azimuth, range, Mode 3/A code, and altitude of the entire beam dwell. Once the plot processing is complete, the plot processor sends the report to the tracker. When the ground station receives a coded reply, the plot processor must examine the full code train before it can generate an output. In the MSSR, the reply decoder acts as the plot processor.

The reply decoder not only generates the aircraft report, it also detects jamming, compares the Sum and Difference or Control video for RSLS, and serves as the defruiter.

Tracker

Tracking is the process of saving reports and comparing them to the next scanned data. This process takes place in the Plot Extractor Processor of the MSSR. The tracker examines plots, or reports, and correlates them to existing tracks or histories. Based on this, the tracker can predict where the target will appear next. FO–4 shows tracked data for two aircraft for 15 scans. The first aircraft Mode 3/A code is 1234, and it is flying at an altitude of 3,500 feet. The second aircraft Mode 3/A code is 1244, and it is flying at an altitude of 3,000 feet. The circles at the beginning of the tracked histories show that two scans of data are required to initiate a track. These plots (blue circles) do not leave the tracker and are not displayed on the controller's display. On the third scan, data becomes a track and it goes out of the tracker for display. The tracker resolves coasted tracks or tracks that do not receive plot data for this scan.

In FO–4, notice the two tracks have some missing plots and display the coast symbol in the middle of their tracks. This means the aircraft may have flown behind an obstruction or there might be a hole in the antenna pattern; or, if the aircraft was in a turn, the fuselage of the aircraft might have shielded the transponder antenna. The system will not drop the track if plots are missing for up to six scans. Instead, the track goes into a coast state where it continues to look for plots to associate with the track assuming that the continued track of the aircraft remains the same. A track coasts (red triangles) for six scans before the system drops it. Parameters set the number of coasts. The tracker calculates the predicted plot position six scans and as it continues to look for a plot to associate with this track. Once dropped, the tracker erases all histories, and should the plot reappear, the tracker initiates a new track.

The track remains in a coast state for up to six scans. In FO–4, notice at the end of the track that there are four coast symbols indicating that the tracker is looking for a plot to associate with this track but has not been able to find it. The tracker also helps to eliminate false targets, since a false target will more than likely not have an existing track. In FO–4, notice the plot that is all by itself. It has the same 3/A code and pressure altitude as the existing track. This plot is not associated with the existing track because it does not fall within the predicted area of the track. The tracker eliminates it and does not send it to the PSR. A reflecting surface probably caused this false plot. Although it is normal to have false plots, you should make every effort to eliminate them.

Large vertical array antenna

The LVA antenna mounted on top of the PSR antenna generates three distinct antenna patterns

1. (FO–2):Sum—∑ (2.4° Main Beam) for transmit and receive.
2. Control—Ω (Omnidirectional pattern with notch at Sum pattern) for transmit and receive.
3. Difference—Δ (two patterns either side of the Sum pattern) for receive only.

FO–2 shows an ideal representation of the antenna patterns. The 3 dB beam width of the sum pattern is 2.4°. The directional beam ensures all aircraft within the beam and 60 nm from the radar are interrogated. All aircraft outside of the 2.4° beam have to wait until the antenna points in their direction. The antenna picks up replies and sends them to the Rx for processing.

The LVA antenna is a 35-column open-array antenna with a gain of 27 dBi (isotropic). Each column consists of 12 radiating elements (dipoles). The LVA shapes the transmit radiation patterns (sum, control) by feeding the columns with the necessary amplitude and phase relationships to form the required radiation patterns. There is a rear radiator to help shape the control beam pattern. The rear radiator consists of four radiating elements covered by a fiberglass radome. The difference receive patterns are developed by the hybrid ring. **NOTE:** There is no capability to perform onsite repair of the antenna.

Radio frequency changeover unit

The RF changeover (RFCO) unit connects to both Channel A and Channel B interrogators. One channel connects to the antenna, and the other connects to dummy loads. The RFCO can switch channels by command from the CMS terminal. The normal interface for changing channels is part of the PSR by way of the Operator Maintenance Terminal. Upon detection of a fault, the standby channel issues a command to the RFCO to change channels. This occurs automatically without operator intervention. There are bi-directional couplers located between the top of the interrogator cabinet and the RFCO for manual power readings.

Control and Monitoring System terminal

The MSSR has a terminal the CMS that is used for maintenance, in-depth troubleshooting, and for optimization. The CMS terminal is a personal computer (PC) based workstation that connects to the interrogator by RS232 connection. You will not normally use the CMS terminal in your day-to-day maintenance of the ASR–11 system. The CMS terminal is a maintenance terminal tied directly to the

MSSR system. The CMS terminal gives status that is more detailed and control features not available on the PSR SCDI terminals, which you normally use for day-to-day maintenance of the ASR–11 system. In normal operation, the CMS terminal is not a connected system. You need to set switches at the radar site in order to connect this terminal to the MSSR and normally leave the switches set in a position that control and status data are sent to the primary radar for control and monitoring instead of the MSSR CMS.

Transponder

The transponder is the airborne unit mounted in the aircraft communications system. The basic parts of a transponder are the Rx and the control head Tx. The transponder does not respond instantaneously when interrogated by a pulse pair from the interrogator. There is a built-in delay of 3 µsec from the time the transponder receives the second interrogation pulse (P3) of the interrogation pulse pair to the transmission of the start pulse of a reply code. In addition, the pulse processor in the interrogator must examine the entire code train of the reply (24.3µsec) before preparing a report. It will add 4.35 µsec if a special position identification pulse is enabled. A transponder is normally a quiescent (idle) device. Without an interrogation from the ground, it is inactive, awaiting the reception of specially keyed pulses. Pulsed signals (P1, P3) from the interrogator activate or trigger the transponder, causing the transponder to transmit a series of reply pulses that indicate the 3/A code or pressure altitude mode C for the particular aircraft. Mode 3/A codes are allocated by ATC. The Tx produces a strong reply that is independent of the received signal strength. The newly generated reply only travels half the distance of a primary radar signal, which makes it stronger than an echo from primary radar. All carrier aircraft and general aviation aircraft that fly within controlled airspace must have a transponder on board and must be capable of responding to 3/A interrogations. However, this leaves a significant number of aircraft that are not required to have a transponder.

Monopulse Secondary Surveillance Radar remote site monitor

The Monopulse Secondary Surveillance Radar remote site monitor (MRSM), often called the parrot, is one of the best friends of maintenance workers and ATC. The MRSM is located at a remote location from the radar site. It is typically located ½ to 10 nm from the radar site and should have clear line-of-sight view to the LVA antenna. The MRSM is basically a transponder used to check the accuracy of the interrogator. The site location of the MRSM is surveyed, so its exact location is known and should never be moved unless the new site is surveyed and the monitoring data entered into the system. When the MSRM is not where it is supposed to be, you will get alarms. The system uses the MRSM for performance monitoring and confidence and consists of two transponders for redundancy. One is always active, and the other is in a standby state. MRSM has adjustable identity, range, and altitude. Dialing the code on both transponders sets the code. They are both set to the same code at initial installation and you should not change them. The range is adjustable out to maximum range of the system. Thumbwheel switches set the range, which causes a delay in the response by the MRSM. You should set the range to a position where the reply does not interfere with air traffic operations. Thumbwheel switches on the MSRM set the altitude and you should set both transponders to the same altitude (greater than 60,000 feet).

Self-Test Questions

After you complete these questions, you may check your answers at the end of the unit.

405. Technological improvements in the beacon radar

1. What does secondary radar provide that primary do not?

2. In secondary radar, the use of two frequencies eliminates what?

3. What are the two reasons for *slaving* a beacon system to a primary radar system?

4. What is the biggest change that the Monopulse Secondary Surveillance Radar (MSSR) upgraded from older beacon radars?

406. Monopulse Secondary Surveillance Radar subassemblies

1. Secondary radar ground/air equipment is composed of what four *major* components?

2. Where are the transmit code pulses developed?

3. What transmitter (Tx) subassembly senses over-current conditions?

4. What information does the plot processor report contain?

5. How long will the tracker remain in a coast state?

6. The large vertical array (LVA) antenna makes what three patterns?

7. The MSSR remote site monitor (MRSM) is basically a transponder used to check what?

1–4. AN/GPN–22 Precision Approach Radar

The final approach and landing are the most critical phases of any flight. Highly accurate equipment is required to ensure safe landings in all visibility conditions. Because ASR equipment did not furnish elevation information, and since the range required of ASR does not allow precision range determination, special Precision Approach Radar (PAR) sets were needed.

Nowadays, the PAR is used only at a few bases in the Air Force. The F-22 Raptor is dependent on the PAR if certain points of failure occur during flight. The PAR, in coordination with ATC provides accurate touchdown communications in these situations.

407. Precision Approach Radar capabilities and limitations

The table below outlines the primary characteristics of the PAR.

PAR Characteristics	
Frequency	9.0 – 9.2 GHz.
Pulse width (PW)	Track: 1.0 µsec (9040 – 9160) (120 MHz). Scan: 0.5 µsec – X2.
Power output	9.4 kW peak.
Performance standard	20 nm: 44.8 dBm (average power). 15 nm: 45.5 dBm (average power).
Average (PRF)	20 nm: 3127 pulses per second (PPS). 8-15 nm: 3652 PPS.
Receiver (Rx) noise figure	3.5 dB.
Antenna (boresight)	Beamwidth (horizontal): 1.3°. Beamwidth (vertical): 0.75°. Gain: 42.0 dB. Polarization: Circular. Aperture (horizontal): 184 in. Aperture (vertical): 159 in.
Scan coverage	Azimuth: 20° (-10° to +10°). Elevation: 8° (-1° to +7°).
Range	20 nm, 15 nm, 8 nm, selectable at indicator.
Array phase shifters	443 active, 57 dummy (holes).
Receiver sensitivity	Normal: -100 dBm. Coherent MTI: -97 dBm. Non-coherent MTI: -97 dBm.
Tracking capability	Six aircraft simultaneously plus reference reflector.

408. Precision Approach Radar theory

The radar set is basically a PAR consisting of a Tx, an antenna group which includes the radar microwave components, a scan and track Rx, and video processing and target data processing circuits. A radar data transfer group transmits target video data and radar mode status to the display in the operations area. Operator originated radar mode control data is transferred from the display segment in the operation shelter by means of the radar data transfer group.

Overview

The radar performs interlaced scan and track functions (including target acquisition) which provide accurate data for aircraft ground control approach guidance, during both clear and adverse weather and visibility conditions. The scan function involves scanning of the air space over a selected runway while the track function determines accuracy of target elevation, azimuth, and range position.

The air space consists of a sector from -1 degree to +7 degrees in elevation and from -10 to +10 degrees in azimuth, out to a maximum range of 20 nm. Operation at ranges of 15 or 8 miles is also available. The entire air space is scanned electronically twice each second for the 20-mile range and 2.4 times per second for the shorter ranges. This is accomplished by means of a phased-array X-band pencil beam antenna that is moved mechanically only when the active runway is changed. Scanning is done by changing the antenna beam position in 439 discrete steps that cover a 2-dimensional raster, with 1 dimension representing azimuth and the second elevation. Each of the 439 beam positions is held constant for 3 PRT periods for the scan mode and for 4 PRT periods for acquisition or track.

Three sequential target returns are thereby provided for each beam position for the scan function. The three returns are used in the presence of clutter or interference to provide MTI operation for the scan

Rx so as to permit aircraft radar echoes to be distinguished from reflections from fixed clutter, rain, or chaff. For areas where clutter or interference is not a problem, particularly at the far end of the radar range, the sequence of three target returns for each beam position permits an integration (summing) function to be accomplished to strengthen the weak target echoes, particularly in the presence of thermal noise.

Operation

The actual selection between integration and MTI operation for the scan video is done at the radar set control in the operations area. An identical display and similar radar set control are contained in the enclosure for radar set setup and maintenance activities. Radar data transfer equipment contained in the radar set and in the operations area transfer display data and radar set mode status to the operations area and radar mode control selections from the operations area to the radar set.

The display of the radar target data to the ground-controlled approach (GCA) operator is presented on a beta-scan type of display. This display is divided into two sections, one presenting azimuth and range data and the second providing elevation and range data.

The scan function of the radar provides the video (target "blips") which appear at the same range in both the azimuth and elevation portions of the display. Targets which are to be acquired and tracked (up to 6 at any 1 time) are designated by the controller who manually positions a symbol on the display just in front of the "blip" representing the target video. If the radar set circuits properly acquire and track this target, a close-control symbol is now presented on the display in both the elevation range section and azimuth range section that follow the 3-dimensioned position of the target (range, azimuth, and elevation). Other information such as target track history is presented on the display by the target track circuits. A point to note is that only the scan Rx provides the "real time" radar echo video, whereas the track Rx and associated computer circuits produce only synthetic symbols on the display at the present position of tracked targets. On both the azimuth-range and elevation-range portions of the display, the tracked target symbols should appear at the target video provided by the scan Rx.

Because the scan Rx is processing radar echoes for display, the noise, rain, clutter, and other interference normally present on radar displays is contributed by the scan Rx video. Hence, signal processing is included in this Rx to minimize this interference.

Self-Test Questions

After you complete these questions, you may check your answers at the end of the unit.

407. Precision Approach Radar capabilities and limitations

1. What is the frequency range of the PAR?

2. How many aircraft can the PAR track simultaneously?

408. Precision Approach Radar theory

1. How often is the entire air space scanned electronically for the 20-mile range and for shorter ranges?

2. What do the two sections on the ground-controlled approach (GCA) display represent?

Answers to Self-Test Questions

401

1. Site Control and Monitoring System (CMS).
2. 2700 – 2900 megahertz (MHz).
3. 60 nautical miles (nm).
4. 700 tracks or 1,000 plots.

402

1. Two.
2. 1030 MHz.
3. 1090 MHz.

403

1. Moving target indicator (MTI) systems.
2. When an aircraft travels at a certain speed and creates a Doppler shift, the same as the pulse repetition frequency (PRF) of the radar, the aircraft becomes invisible to the radar.
3. When an aircraft produces a Doppler shift that produces little or no output from a phase detector and becomes invisible to the radar.
4. A zero velocity target, compare it to known clutter, and declare it as a target.
5. 80 knots and 700 knots radial velocity.
6. Staggering the CPI and performing an M of N function.
7. Multiple amplifier modules and pulse compressions.
8. Low beam.
9. One for processing weather and one for target returns.

404

1. To support and turn the antennas and provide azimuth information.
2. Two Media Processing System MPS-800 servers.
3. Injects test targets.
4. A LO and an UCON.
5. Direct digital conversion.
6. A high power RF signals (18.0 kW minimum).
7. Transmitter RF monitor control CCA.

405

1. Identity and altitude.
2. Clutter caused by direct reflections.
3. (1) To allow the display of radar and beacon information on a common display or radar scope.
   (2) To use the data from both systems to positively identify radar returns as aircraft.
4. It can determine azimuth from one return of the transponder, hence “monopulse” azimuth determination.

406

1. (1) Transmitter.
   (2) Receiver.
   (3) Plot processor.
   (4) Tracker.
2. In the Tx.
3. Low Duty Power Amplifier.
4. The aircraft’s azimuth, range, Mode 3/A code, and altitude of the entire beam dwell.

5. For up to 6 scans.
6. (1) Sum.
   (2) Control.
   (3) Difference.
7. The accuracy of the interrogator.

407

1. 9.0 – 9.2 GHz.
2. Up to 6 aircraft.

408

1. Twice each second for the 20-mile range and 2.4 times per second for the shorter ranges.
2. One presents azimuth and range data and the second provides elevation and range data.

Complete the unit review exercises before going to the next unit

Unit Review Exercises

Note to Student: Consider all choices carefully, select the *best* answer to each question, and *circle* the corresponding letter. When you have completed all unit review exercises, transfer your answers to the Field-Scoring Answer Sheet.

Do not return your answer sheet to the Air Force Career Development Academy (AFCDA).

1. (401) How many amplifiers are in the Primary Surveillance Radar (PSR) transmitter?
   a. 1.
   b. 4.
   c. 8.
   d. 12.

2. (401) Where are Primary Surveillance Radar (PSR) failures reported?
   a. Sensitivity Monitoring Control System (SMCS).
   b. Control and Monitoring System (CMS).
   c. Redundant Monitoring System (RMS).
   d. Test and Monitoring System (TMS).

3. (401) What is the frequency range of the Primary Surveillance Radar (PSR)?
   a. 2600–2900 megahertz (MHz).
   b. 2600–3000 MHz.
   c. 2700–2900 MHz.
   d. 2700–3000 MHz.

4. (402) In the Monopulse Secondary Surveillance Radar (MSSR), when the operational on-line channel fails, what happens to the system?
   a. Faulted channel waits 4 seconds, and then transfers operations to standby channel.
   b. Faulted channel goes on-line then standby channel goes off-line within 4 seconds.
   c. Standby channel waits 4 seconds to go on-line, and then faulted channel goes off-line.
   d. Standby channel comes on-line and the faulted channel goes off-line not to exceed 4 seconds.

5. (403) What does an aircraft's speed and angle in reference to a radar site determine?
   a. Radial velocity.
   b. Tangential phase.
   c. Tangential pattern.
   d. Blind pattern and phase.

6. (403) What term describes the condition of an aircraft becoming invisible to radar when it travels at a certain speed and creates a Doppler shift, the same as the pulse repetition frequency (PRF) of the radar?
   a. Tangential phase.
   b. Tangential speed.
   c. Blind phase.
   d. Blind speed.

7. (403) What type of system can look at zero Doppler returns, compare them to a clutter map, and then determine whether the video return is ground clutter or a target?
   a. Doppler phase.
   b. Doppler speed.
   c. Moving target indicator (MTI).
   d. Moving target detection (MTD).

8. (403) How many Doppler filters are in the Primary Surveillance Radar (PSR)?
   a. 1.
   b. 3.
   c. 5.
   d. 7.

9. (403) What eliminates second-time-around targets in the Primary Surveillance Radar (PSR)?
   a. Staggering the coherent processing interval (CPI) and performing an M of N function.
   b. Staggering the coherent repetition oscillator and performing an M of N function.
   c. Pulse repetition frequency (PRF) velocity.
   d. PRF phasing.

10. (403) Which ASR–11 beam is the *normal* radiation beam and is *always* used to transmit and receive?
   a. L-beam.
   b. S-beam.
   c. Low beam.
   d. High beam.

11. (404) What provides Ethernet connection from the Monopulse Secondary Surveillance Radar (MSSR) into the site control and data interfaces (SCDI) to provide an interface to the radar control panel (RCP) at the radar site?
   a. Two MPS–800 servers.
   b. Primary and secondary modems.
   c. Advanced signal data processors (ASDP).
   d. A down-converter (DCON) and an up-converter (UCON).

12. (404) In the Primary Surveillance Radar (PSR), if one transmitter amplifier module fails or is in standby, the remaining seven amplifier modules will provide a *minimum* of 14kW peak power. This is enough power to cover how many nautical miles (nm)?
   a. 140.
   b. 100.
   c. 80.
   d. 60.

13. (405) Originally, secondary radar technology was created while developing the radar to
   a. increase the range of the primary radar.
   b. provide more power to the primary radar.
   c. identify a radar aircraft target as friend or foe.
   d. provide range and azimuth to the primary radar.

14. (405) What does a secondary radar system provide that a primary does not?
   a. Azimuth and range.
   b. Identity and altitude.
   c. Identity and azimuth.
   d. Azimuth and altitude.

15. (405) What does the use of two frequencies in secondary radar transactions eliminate?
   a. Side lobe suppression.
   b. Automatic altitude corrections.
   c. Clutter caused by direct reflections.
   d. Identification replies from transponders.

16. (405) What process is *not* necessary with digitized beacon and primary radar systems like the ASR–11?
    a. Range.
    b. Azimuth.
    c. Correlation.
    d. Synchronization.

17. (405) The biggest upgrade Monopulse Secondary Surveillance Radars (MSSR) have over older beacon radars is they
    a. do not require range measurements.
    b. decreased the amount of antenna patterns used.
    c. can determine azimuth from one return of a transponder.
    d. allow more than one aircraft to have the same discrete codes.

18. (405) The Sum port is the main beam of the antenna; the center of this main radar beam is known as the
    a. boresight.
    b. control beam.
    c. azimuth angle.
    d. antenna pattern median (APM).

19. (406) The Monopulse Secondary Surveillance Radar (MSSR) transmitter produces coded pulses up to what power level?
    a. 1,000 watts peak.
    b. 1,200 watts peak.
    c. 1,600 watts peak.
    d. 2,000 watts peak.

20. (406) Which Monopulse Secondary Surveillance Radar (MSSR) subassembly develops the radio frequency (RF) sample video for monitoring?
    a. Driver.
    b. Mode generator.
    c. Transmitter interface.
    d. Low duty power amplifier.

21. (406) Which Monopulse Secondary Surveillance Radar (MSSR) subassembly injects the self-test pulse into each receiver?
    a. Driver.
    b. Mode generator.
    c. Transmitter interface.
    d. Low duty power amplifier.

22. (406) What signal is created when the Monopulse Secondary Surveillance Radar (MSSR) receiver mixes the 1090 MHz replies with the local oscillator (LO) from the receiver interface?
    a. 30 MHz stable local oscillator (STALO).
    b. 60 MHz intermediate frequency (IF).
    c. 90 MHz intermediate frequency.
    d. 90 MHz stable local oscillator.

23. (406) What does the Monopulse Secondary Surveillance Radar (MSSR) plot processor do?
    a. Groups replies from all reachable aircraft simultaneously and produces a compiled digitized report.
    b. Examines plots and correlates them with existing tracks or past histories.
    c. Groups replies from the same aircraft and produces a digitized report.
    d. Decodes errant interrogations.

24. (406) How many columns are in the large vertical array (LVA) antenna?
    a. 35.
    b. 42.
    c. 45.
    d. 360.

25. (406) What Monopulse Secondary Surveillance Radar (MSSR) terminal is used for maintenance, troubleshooting, and optimization?
    a. Special Position Terminal (SPT).
    b. Open Maintenance Terminal (OMT).
    c. Secondary Surveillance Terminal (SST).
    d. Control and Monitoring System (CMS).

26. (407) What is the frequency range of the Precision Approach Radar (PAR)?
    a. 8.0 – 8.9 gigahertz (GHz).
    b. 9.0 – 9.2 GHz.
    c. 9.2 – 9.4 GHz.
    d. 9.2 – 9.6 GHz.

27. (407) How many aircraft can the Precision Approach Radar (PAR) track simultaneously?
    a. Up to 6.
    b. Up to 9.
    c. Up to 12.
    d. Unlimited aircraft.

28. (408) In the Precision Approach Radar (PAR), the display is divided into what two sections?
    a. Azimuth and range data; elevation and range data.
    b. Azimuth and elevation data; transponder data.
    c. Noise clutter; interference.
    d. Noise clutter; rain clutter.

Please read the unit menu for unit 2 and continue ➔

Student Notes

Unit 2. Standard Terminal Automation Replacement System

2–1. Standard Terminal Automation Replacement System Operational Sites 2–1
409. Introduction to the Standard Terminal Automation Replacement System 2–1
410. Standard Terminal Automation Replacement System operational site 2–4
2–2. Workstation and Site Support Subsystem Descriptions 2–7
411. Standard Terminal Automation Replacement System workstation theory of operation 2–7
412. Site support subsystem 2–12

JUST AS THE DASR is the modern digital system that replaced the AN/GPN–20 ASR, the Standard Terminal Automation Replacement System (STARS) is the digital system that replaced the older analog indicator systems. This unit will focus on the STARS functional operation and give a close look into the STARS workstation theory of operations.

2–1. Standard Terminal Automation Replacement System Operational Sites

STARS improves the computer system used by ATC at terminal facilities to a single, state-of-the-art platform. STARS gives controllers a complete and precise picture of the airspace, enabling them to manage aircraft that are tracked with radar.

Controllers use STARS to provide ATC services to pilots in terminal airspace–the airspace immediately surrounding major airports. STARS receives radar data and flight plan information for ATCs at more than 255 radar control facilities and hundreds of airport control towers. These services include separation and sequencing of air traffic, conflict and terrain avoidance alerts, weather advisories, and radar vectoring for departing and arriving traffic.

This section will provide you with a few characteristics of the STARS system, an overview of the various system regions that are supported, and a breakdown of the elements that make up the STARS sites.

409. Introduction to the Standard Terminal Automation Replacement System

The STARS provides a centralized control structure that supports decentralized execution. The STARS Central Support Complex (SCSC) provides research for upgrading existing hardware and maintains the software; and when necessary generates updates to the software programs. The programs are received at the Operational Support Facility (OSF), are generic in nature, and must be adapted to a specific site. The STARS Operational Site (SOS) receives the updates and maintains the software along with back-ups for site operation. The SOS provides the facility to accept radar inputs from the National Airspace System (NAS) for the role of providing ATC to a given sector of airspace. The SOS provides data to, and accepts data from, local and remote towers (RT) for direct approach control to local airports and DOD airbases.

The STARS SOS automation system consists of dual redundant service levels: Full Service (FS) and Emergency Service Levels (ESL) of operation. Each service level has dual redundant sets of processors and local area network (LAN) equipment to perform the mission. The SSS does not employ dual redundancy since it serves only a support role and does not affect the ATC automation process.

Standard Terminal Automation Replacement System capabilities and limitations

STARS receives radar data and flight plan information and presents the information to ATCs on high resolution, 20" x 20" color displays allowing the controller to monitor, control, and accept hand-off of air traffic. The following points are descriptions of critical capabilities and limitations of the system:

- The Terminal Controller Workstations (TCW) provide position-by-position in-place replacement of failing system displays. They provide up to 14 adaptable data block types and 16 adaptable list types to accommodate current and future display requirements. The TCW also provides controllers with preference sets that allow for ease in shift changes and resectorization.
- The color displays are specially developed for ATC and are capable of displaying six distinct levels of weather data (identified by different colors) simultaneously with air traffic, allowing controllers to direct aircraft around bad weather.
- STARS are capable of tracking up to 1,350 airborne aircraft simultaneously within a terminal area. The system interfaces with multiple radars (up to 16 short and long range), 128 controller positions, 20 RTs, and a 400 by 400 mile area of coverage.
- STARS have two separate, fully redundant automation systems running in parallel providing an instantaneous back-up service to controllers. The Full Service Level (FSL) is based on Raytheon's AutoTrac air traffic management system and the ESL is based on Raytheon's TracView automation product.

Standard Terminal Automation Replacement System overview

STARS is a joint DOD and FAA program that replaced the Automated Radar Terminal Systems and other capacity-constrained, older technology systems.

The following are some of the STARS characteristics:

- Features large screen color displays for ATCs at every terminal facility in the country.
- Uses powerful commercial workstation computers interconnected by modern LAN.
- Gives technicians modern computer maintenance technology, providing increased reliability at reduced cost.
- Provides equal or better levels of service and safety while lowering operating and maintenance costs.

STARS is an open architecture, distributed software-based ATC automation system that is the replacement system for the DOD Radar Approach Control (RAPCON) and the FAA Terminal Radar Approach Control (TRACON) ATC facilities.

The SCSC located at William J. Hughes Technical Center in Atlantic City, New Jersey, manages the STARS. There are nine geographical regions in the United States, as displayed in figure 2–1. An OSF, which is normally co-located with one of the region's larger SOSs, supports each of the regions.

Figure 2–1. STARS regions.

Standard Terminal Automation Replacement System site elements

The STARS consists of three basic site elements: the SCSC, OSF, and the SOS. The following paragraphs provide an overview of each site element in the standardized national ATC system. In addition to these sites, the SOS local towers (LT), RT, and standalone towers provide for local ATC operations. Refer to FO–05 for this discussion.

Standard Terminal Automation Replacement System Central Support Complex purpose

The SCSC is the national-level configuration control of STARS. The SCSC provides for centralized control of STARS field support and hardware/software development. The SCSC supports both DOD and FAA STARS sites. The SCSC interfaces with all other STARS facilities by a primary FAA/DOD wide area network (WAN) to the OSF and SOS sites and a secondary dial-up circuit with the sites is the backup to the WAN. The SCSC and the supported sites can use the dial-up circuits to establish simultaneous sessions. **NOTE:** The Generation 4 and STARS Enhanced Local Integrated Tower Equipment (ELITE) systems no longer connect to the outside world.

Operational support facility purpose

The OSF serves as a support facility for software maintenance to include both site adaptation data and site support for associated SOSs. The purpose of the software maintenance role is to receive operational site software releases from the SCSC, integrate site adaptation and map data to complete the operational program, test the entire operational program before implementation, and deliver the operational program to the SOSs. The OSF customizes software releases from SCSC for each individual SOS. The nine regional OSFs support the FAA. DOD (Air Force and Army) STARS sites are supported by the Navy OSF.

The OSF and the Database Management System provide an environment that supports upgrades and modifications to the SOSs. The OSF releases software and site-specific adaptation data to the SOSs.

Each OSF site performs hardware and software maintenance, including site adaptation and site support for multiple SOSs. The OSF/SOS interface supports the transfer of system software, system performance data, resource status data, diagnostic data, and system resource control data.

Standard Terminal Automation Replacement System Operational Site purpose

Each SOS facility provides the automation of air traffic data to support ATC within the DOD RAPCON and the FAA TRACON terminal control areas. The SOS accepts and processes radar and flight data to provide ATC and system information to the controllers and external systems. Typically, the SOS includes a LT for local ATC. A SOS site may support one or more RT as part of their configuration. Remote towers extend the SOS role by supporting satellite airports that are usually several miles away from the SOS; as such, they are functionally part of the SOS and support the primary mission of the SOS.

Selected satellite airports have direct radar feeds to the RT for standalone operation when associated communication links are not available. Stand-alone towers provide support for local airport ATC similar to the RT capabilities but without the need for direct SOS support.

Standard Terminal Automation Replacement System Enhanced Local Integrated Tower Equipment site

STARS ELITE is a modern, distributed, and redundant software air traffic control automation system. It is comprised of a single FSL only. The STARS ELITE program receives and processes target reports, weather, and other non-target messages from both terminal and en route digital sensors.

410. Standard Terminal Automation Replacement System operational site

Each SOS is comprised of numerous computers linked with several LANs that together accomplish the task of accepting radar and flight plan data and displaying ATC related information on display screens for ATC personnel.

Types of input data

As seen on FO–06, radar data can be from radars that serve the terminal area, Airport Surveillance Radar (ASR) for RAPCON and from long-range radars that serve the en route flights. The SOS also accepts and processes Air Route Traffic Control Center (ARTCC) data. All input data to the SOS is digital and is applied directly to modems or WAN routers.

Surveillance radar data consists of:

- Weather information.
- Primary radar returns.
- Status monitoring information.
- Status data regarding the terminal radar site and equipment.
- Real time quality control (RTQC) to confirm accuracy of data.
- Beacon codes SIFs data for the tracking of aircraft.

ARTCC data consists of:

- NAS information.
- Enhanced Traffic Management System (ETMS) data.
- Interfacility flight data necessary for accurate aircraft tracking.

Standard Terminal Automation Replacement System Operational Site Subsystems

The SOS consists of the following two subsystems:

1. Terminal Automation Subsystem (TAS).
2. Site Support Subsystem.

Refer to FO–07 as you follow this discussion. To facilitate your study, the cabling throughout the FOs is color coded as follows:

Color Coded Cables	LAN Service Connections
Red cables	Full Service LAN A (FS LAN A)
Blue cables	Full Service LAN B (FS LAN B)
Green cables	Emergency Service LAN A (ES LAN A)
Yellow cables	Emergency Service LAN B (ES LAN B)
Grey cables	Site Support Service LAN

Terminal Automation Subsystem

The TAS is the core of STARS ATC operation and accomplishes five roles of the SOS:

1. Radar data display.
2. Flight data interface and display.
3. Operator interaction.
4. Data recording.
5. Status monitoring and system control.

The TCWs and the Tower Display Workstations (TDW) display radar and flight data and allow for operator interaction. The dual redundant digital recording system continuously records data and

provides for 24-hour non-interrupted recording of ATC operations and maintenance actions. The Monitor and Control Workstation (MCW) provides status monitoring, system control, and establishes the computer-human interface (CHI).

To ensure continuous operation of the SOS, all common mission critical elements of the TAS are redundant; operational redundancy is implemented with two service levels, as stated earlier in the capabilities and limitations.

Service levels

A service level is an indication of the functional and performance capability provided by STARS. Service levels operate concurrently and independently in STARS. The service levels available in STARS are:

- Full Service Level.
- Emergency Service Level.

Both FSL and ESL operation provide the radar data processing (RDP), monitoring, and CHI functions.

Auto Trac provides FSL processing for STARS. FSL provides the radar and track data processing, situation display, monitoring, and CHI functions required for ATC. FSL also provides site and system monitoring, ATC data recording, and network access functions required to support ATC operations. Should FSL operation fail, the system automatically implements ESL.

The TracView system provides ESL processing for STARS. The TracView system consists of licensed software and commercial off-the-shelf hardware and software. The main application programs provided by the TracView system are the operations menu and the Operational Computer Program. The ESL provides a reliable, minimal function, ATC functionality in the event the STARS FSL is unavailable at the SOSs. ESL operates over two LANs (ES LAN A and ES LAN B).

NOTE: Generation 4 Full STARS eliminated the ESL and now includes two systems (SYS_1 and SYS_2) which run FS AutoTrac 2000 ATC Automation Specific software.
SYS_1 is the FSL and SYS 2 is the EFSL.

NOTE: STARS ELITE only contains dual FS LANs A and B. There is no EFSL system should FSL completely fail.

Site support subsystem

The SSS provides software support for the site and site-to-site data communication for software distribution (FO–07). The SSS allows accomplishment of the primary STARS operational mission at individual SOSs without connection to any of the support sites. For support purposes, however, the SOS includes two dial-up circuits for interface with external support sites. The dial-up circuits connect an SOS with its associated OSF for software download. The dial-up circuits also provide an interface connection to SCSC or any other STARS site, subject to the security criteria of the site.

The SSS provides software support and testing and training support for the SOS TAS. General purpose workstation (GPW) and Testing and Training Simulator Equipment/Simulator (TTSE/SIM) provide for general purpose processing along with simulated radar and site interface data for testing and training of SOS functions. The SSS server retains and distributes software for the site.

We will cover the SSS more in-depth in the next section.

Self-Test Questions

After you complete these questions, you may check your answers at the end of the unit.

409. Introduction to Standard Terminal Automation Replacement System

1. How many airborne aircraft is the Standard Terminal Automated Replacement System (STARS) capable of tracking simultaneously within a terminal area?

2. The STARS consists of what three basic site elements?

3. The STARS Central Support Complex (SCSC) provides centralized control of what?

4. Which Operational Support Facility (OSF) support the Air Force?

5. What does the STAR System Operational Site (SOS) do?

410. Standard Terminal Automation Replacement System Operational Site

1. What three types of data does the SOS receive from the ARTCC?

2. What are the two SOS subsystems?

3. What are the five roles accomplished by the (TAS)?

4. Name the two STARS service levels.

5. What three functions do both service levels provide to the STARS?

6. What does the site support subsystem (SSS) provide?

2–2. Workstation and Site Support Subsystem Descriptions

The workstation is one of the most important and critical pieces of equipment within the STARS. This section will explain the different types of workstations and the system's theory of operation, to include the SSS.

411. Standard Terminal Automation Replacement System workstation theory of operation

There are four different types of workstations associated with STARS: MCWs, TCWs, TDWs, and GPWs. These workstations allow the user to perform ATC, system maintenance, monitoring and control, and training. Refer to FO–08 for the following discussion.

Monitor and Control Workstation

The MCW uses maintenance, control, and display portions of the software to provide automation subsystem (AS) configuration control and status monitoring in an X-Windows environment. Status information is presented graphically using color-coded icons for ease in determining system status.

SYS 1 processor

The MCW FS processor uses system monitor control (SMC) software, control and monitor display (CMD) software, and the Solaris operating system to perform control and monitoring functions for the FS portions of the AS. Processor memory includes random access memory (RAM) and an internal solid-state drive. This processor is capable of accessing both FS LAN A and FS LAN B.

SYS 2 processor

The MCW ES processor also uses SMC software, CMD software, and the Solaris operating system to perform control and monitoring functions for the FS portions of the AS. Processor memory includes RAM and an internal solid-state drive. This processor is capable of accessing both EFS LAN A and EFS LAN B.

The CMD computer software configuration item (CSCI) provides the MCW operator with an X-Windows terminal displayed at the MCW. The CMD software displays the MCW screen when monitoring system status. The CMD provides processing support for observation and monitoring of system performance and provides access to tools for maintenance, fault detection, and repair of faulty subsystems. CMD provides the controls for reconfiguration, system restart, playback, and system parameter update. The CMD relies on the SMC CSCI for system status data and for performing the actions initiated by the MCW operator.

The SMC CSCI supports monitoring and control of system elements and the external interfaces controlled by AutoTrac software. Each automation system processor hosts an SMC agent, which acts under the direction of a manager running in the MCWs. The FS part of the MCW runs the SMC manager and Sun enterprise manager software. SMC periodically compares central processing unit (CPU) and memory use of the RDP and TCWs/TDWs to adapted thresholds. If thresholds exceed, system messages display at the MCWs. The network services and the SMC collect the CPU data.

The application software (running within the subsystem) reports all of the other errors, or potential errors to the SMC agent. As the application software interfaces with external interfaces such as external links (radars links and NAS) or peripherals (such as printers), it checks for errors while interfacing with the equipment. Errors go to the local SMC agent. SMC agents maintain design parameter tables that contain data associated with each error within this subsystem. These tables allow a threshold to be set for the errors (n errors within m time period) and identification of the format and content of system messages displayed at the MCW. Analysis of the type of error determines the threshold values and is refined, as needed, based on experience with the interface in the integration and test environment and in the field.

SMC agents report errors (as above) to the SMC manager for evaluation to determine if a subsystem or interface failure warrants reporting. The SMC then updates and distributes status tables in adaptation data to indicate the failure. If redundant subsystem fails catastrophically, the SMC function determines if a switchover is required. The switchover occurs automatically.

In addition to processing reported errors, SMC agents also send periodic “heartbeats” to the SMC manager. If the SMC manager fails to receive these heartbeats for a specified length of time, the non-reporting subsystem has catastrophically failed.

NOTE: In the STARS ELITE system, the multi-subsystem processor runs the communications gateway (CGW), RDP continuous data recording (CDR) and SMC/CMD programs.

Terminal Control Workstation

The TCW is the “Radar Scope” that permits an operator to track aircraft and provide directions to pilots of aircraft entering, flying within, and exiting the terminal area. You will normally see the TCW located in the RAPCON. The TCW is a standalone console containing FS and EFS processors, a Data Entry Controller (DEC), a DEC power supply, a video switch, a TCW monitor, and interfaces for up to three data entry sets (keyboards and trackballs). The LAN ports in the TCW processor provide 1000BASE-TX (BTX) interface with LAN A and LAN B. These LAN connections are at the rear of the processor. The two processors connect to each other by a dedicated interface card internal to each processor, and pass status and controller setting preferences. Figure 2–2 shows the TCW interconnection diagram.

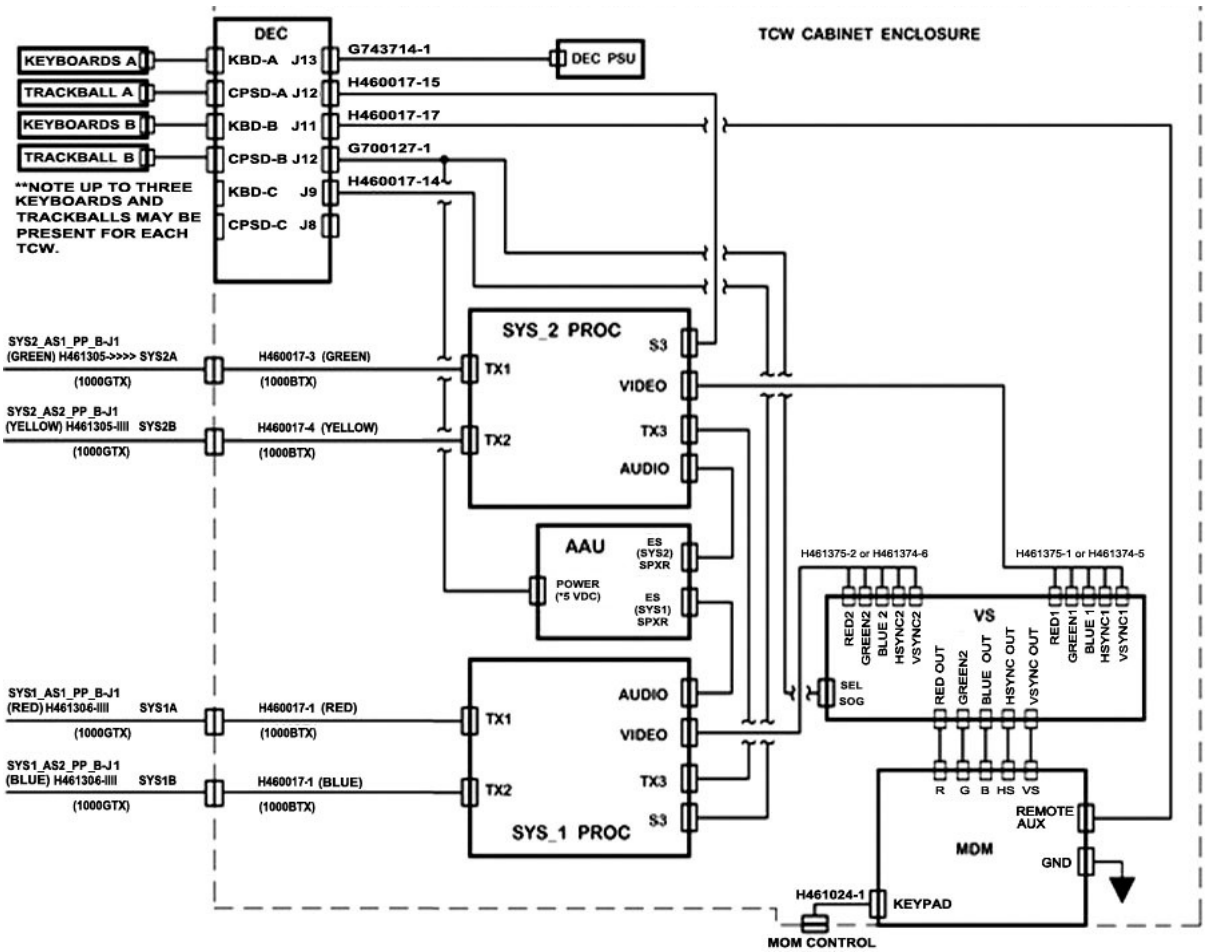

Figure 2–2. TCW interconnection diagram.

Terminal ATC data displays at the TCW. The TCW gives an ATC operator the functional capabilities to control air traffic (data entry, data display). The terminal control position (TCP) at a TCW can also

display the MCP. This allows a technician to perform normal monitor and control tasks from a TCW instead of an MCW. Data entry at a TCW is via an ABC or QWERTY keyboard and a single-button trackball.

Full Service Level Situation Data Display

The FSL Situation Data Display (SDD) CSCI in each TCW runs in an X-Windows environment and processes the flight data from the on-line RDP. The data is stored and, depending on the operational circumstances, may result in a series of X-Server commands for the TCW display. The TCW X-Server function processes these commands and generates the appropriate display, which is available to the TCW operator.

The SDD CSCI provides the TCP operator with an X-Windows display of the FS level on the TCW/TDW. The SDD provides the processing required for displaying live or simulated track and flight data from the RDP on the situation display. There is user interface commonality between FS and EFS. The SDD CSCI processes all controller inputs and displays the information requested. The software allows the controller to view continuously the display while using the functions that the system supports.

The CSCI displays weather data received from the RDP. The controller may request two historical weather images as well as the current image. The historical weather interval varies from 1 to 10 weather updates (30 to 300 seconds). The software also provides for the display of status information, including EFS status, within the system area on the TCW/TDW. The controller easily switches from displaying FS to EFS with a single keystroke.

SYS 1 processor and SYS 2 processor

The FS processor contains a display controller (Tech Source 2K video card) that outputs video to the TCW video switch. The FS processor selects data from either FS LAN A or FS LAN B. There are two ports, TX1 and TX2 at the rear of the FS processor to provide 1000BTX interface with FS LAN A and FS LAN B. The video output from the FS processor display interface is output to a special cable. The display controller connects to the DBM 5W5P connector side of the special cable. The other end of the cable separates into five coaxial cables carrying the video signals (RED, GREEN, BLUE, HORIZONTAL SYNC, and VERTICAL SYNC) to the video switch. The RED, GREEN, and BLUE signals pass on 50 Ohm Bayonet Neill-Concelman (BNC) connector and the HORIZONTAL SYNC and VERTICAL SYNC signals pass on 75 Ohm BNC. The FS processor is at the bottom of the TCW console and is accessible through the rear of the console.

Data Entry Controller

The TCW and DEC is on the front of the cabinet below the monitor shelf. The DEC power supply is behind the monitor. The DEC provides the capacity for controlling up to three keyboards and trackballs and interfaces these devices into a single serial interface at the rear of each processor. The DEC also provides +5 VDC to the audio alarm unit speaker. The DEC provides the FS/EFS select signal to the video switch when the operator uses the keyboard to select either FS or EFS processor video for display on the monitor.

Main Display Monitor (BARCO Model 471)

The Barco main display monitor (MDM) provides 2048 line (vertical) by 2048 pixel-per-line (horizontal) resolution on a 19.8 inch x 19.8 inch liquid crystal display. The Barco MDM is a high brightness display providing 150-foot candles of illumination and is viewable in an environment with low to moderate artificial light conditions. Separate red, green, and blue color signals and horizontal and vertical sync signals go through coaxial BNC jacks on the rear of the monitor. The MDM mounts at the top of the TCW console with roll-out capability from the rear (to a special purpose maintenance cart) for maintenance and/or replacement.

Tower Display Workstation

TDWs access the LANs to display processed radar data at the TDW monitors in the tower cab. The individual TDW uses SDD software (identical to the TCW SDD), to process specific surveillance data from the LANs and entries from the data entry equipment to provide the appropriate ATC display at the TDW monitor. In addition to an ATC situational display indicating aircraft locations and weather data, the TDW monitor displays status (e.g., selected radar, altitude filter settings, and beacon code blocks). X-Windows software provides the screen display structure for the selected TDW display and facilitates command and data entry from the associated data entry equipment.

Local area network

Extension of the terminal AS LANs to tower displays is via respective LAN A and LAN B switches, LAN routers and RT LAN routers, and LT LAN switches. The LAN routers provide data distribution between the LAN switches and TDWs at RTs via connection to the RT LAN routers. The LAN routers interface with the LAN switches via 1000BTX connections.

A direct F/O connection between the LAN switches and LT LAN switches provides local data distribution. The LT LAN switches interface with the LAN switches via 1000BTX connections as described in the AS to LT system interface descriptions. 1000BASE-SX small form factor pluggable (SFP) converters at the LAN switches provide wire-line-to F/O converters and another set of converters at the LT LAN switches revert data back to wire-line signals for distribution to LT TDWs. Each LT LAN switch can support up to 16 TDWs by 1000BTX connections.

SYS 1 processor and SYS 2 processor

The TDW processor uses software and the Solaris operating system to process designated ATC data. The processor also runs X-Server software and receives user inputs (switch actions) via the TDW DEC. The processor contains a display controller (Raptor 1K video card) that outputs video to the video distribution amplifier. The processor processes data from either LAN A or LAN B. Ports at the rear of the processor provide 1000BTX interface with LAN A and LAN B. The video output from the processor display controller is output to a special cable. The display controller connects to the DBM 13W3P connector side of the special cable. The other end of the cable separates into four coaxial cables carrying the video signals (RED, GREEN, BLUE, and SYNC) to the monitor. The RED, GREEN, BLUE, and SYNC signals are passed on 75 Ohm BNC. The processor receives 120 volts AC unconditioned power from an unconditioned power strip in the equipment rack.

1 Giga-bit switch

The AS to LT interface is comprised of two identical AS LAN switches and two identical LT LAN switches. A direct F/O connection between the AS LAN switches and LT LAN switches provides LT data distribution. The LT LAN switches interface with the AS LAN switches via 1000BTX. 1000BASE-SX SFP converters provide wire-line-to F/O conversions at the AS LAN switches and another set of converters at the LT LAN switches convert data back to wire-line signals for distribution to LT TDWs. Each LT LAN switch can support up to 16 TDWs by 1000BTX connections.

Data Entry Controller

The TDW monitor switch assembly (MSA) is an assembly within the TDW system and consists of video/audio component and DEC component. The video/audio component controls video and audio outputs from TDW processor. The DEC component receives user inputs from the TDW keyboard(s) and trackball(s). The DEC component relays user inputs in the form of display content requests to the TDW processor in order to develop appropriate display images. The DEC component sends control signals to the TDW video component to select the video output from either the LAN A or LAN B. The selected video output goes from the video component to the TDW monitor. The TDW MSA typically in the LT1 equipment rack with other components of the associated TDW.

The TDW F/O video extension system includes F/O Txs, Rxs, F/O distribution panel, and F/O cables that distribute TDW display data between the tower equipment room and the tower cab. For each TDW, a F/O Tx in the tower equipment room converts the video switch outputs to F/O signals for transmission to the tower cab. A F/O Rx in the tower cab converts the F/O signals back to wire-line signals for input to the associated monitor.

Display monitor

The GENSTAR II TDW monitor provides a 1024-line by 1280-pixel addressable display on a high brightness 20-inch flat panel display. To facilitate viewing in the tower environment, the display includes contrast enhancement and antiglare coatings. This monitor provides a full color display with a contrast ratio of greater than 6.8:1 at 6000 foot-candles of incident ambient light. Separate red, green, and blue color signals and composite horizontal/vertical sync signals come in via connectors at the back of the monitor. Brightness control, from the TDW remote bright control box, comes in via a connector at the back of the monitor.

Cooling fans mounted on the back of the TDW monitor help to regulate the monitor's internal temperature. These fans operate for approximately two seconds during power-up. Thereafter, the fans activate when the heat sink temperature reaches 95° Fahrenheit (F), and they turn off when the heat sink temperature drops to 77° F. The TDW monitor is in the tower cab.

Remote Tower Display Workstation

The RT operates as a subset of an associated SOS AS. All common mission critical elements of the RT re redundant. Independent hardware and software provide for FSL and ESL operations at the RT.

Local area network

The RT uses redundant 10 megabits per second (Mbps) Ethernet LANs for both networks. LAN router/switches provide connection between site TDWs and radar/data sources. Typically, T1 modem equipment provides interface between the tower LANs and the respective TAS LANs at the associated SOS. These LAN interfaces provide the RT with the processed data. In addition, these RT-to-SOS interfaces provide the control and data paths for connection to the SOS MCW for subsystem control, configuration, and status monitoring. For RTs with local area radar inputs, local radar data source interface for the EFS LANs is via line splitters, network universal input/output (NUNIO) modules, and CGWs. FS data is only provided by T1 modem connections to the associated SOS LANs.

Processing

Internal processors and necessary video transfer equipment are identical the Local Tower Display Workstations (LTDW) previously discussed.

Layer 3 fast Ethernet switch/router

The major difference between the local TDW Local Tower Display Workstation (LTDW) and the remote TDW Remote Tower Display Workstation (RTDW) is that the RTDW needs a Layer 3 switch that can function as a router. The router is necessary in that it can handle the T1 modem input in RS–232 format and can convert the output to Ethernet for the processor.

General-Purpose Workstation

The GPW processor (FO–07) is part of the SSS and it operates as a server data/command processor, display controller, and data entry interface for the GPW. Appropriate application software, resident at the processor or available from the Toolhost SSS and operating in a Solaris environment, performs the desired processing tasks.

GPWs provide flexible general purpose processing to support SOS operations and maintenance as required. You can use a GPW as a standalone workstation or as an interface, via the support LAN, with other units connected to the LAN. For example, you can designate a GPW as a pseudo pilot

workstation for test or training purposes. In this case, the TTSE/SIM would provide data simulation and exercise control while the GPW acted as a pseudo pilot console. **NOTE:** Some STARS ELITE sites do not have a GPW.

Layer 3 fast Ethernet switch/router

The support LAN router provides data distribution between support service equipment, AS LANs, and a network printer. This router performs the protocol and signal conversion necessary to provide a controlled interface between the 1000BTX traffic at the support LAN router and 1000BTX traffic at LAN switches and network printer. Traffic prioritization and data buffering are performed to ensure data messages (or packets) are available at required destination nodes without message collisions. The support LAN router ports provide 1000BTX connections to a network printer, Toolhost SSS processor, and routing to/from LAN switches.

412. Site support subsystem

The site support subsystem (SSS) provides off-line support functions needed to maintain the STARS site (software maintenance, testing, and training). Since the SSS is not mission critical, it is isolated from the operational subsystems by routers and does not include redundancy. The SSS includes Toolhost SSS equipment, GPWs (previously discussed), TTSE/SIM, a printer, and the network equipment used to provide communication interface in the associated LANs.

Toolhost processor

The Toolhost SSS receives operational and adaptation software for the site via the support LAN router during the software download process. Images of all operational and adaptation software used by the STARS ELITE are retained on the Toolhost SSS. The AS accesses the software via the support LAN router and LAN switches. The Toolhost SSS includes a processor with internal solid state disk drive memory, two external tape digital audio tape (DAT) drives, an external CD/DVD Universal Serial Bus (USB) via hub, and an external hard disk drive. The Toolhost SSS processor interfaces with digital recording devices for recordable CD subsystem data maintenance. A keyboard, mouse and monitor acts as the user interface. The keyboard and mouse provide data and command entry for the Toolhost SSS processor.

The monitor provides graphic displays necessary to support server actions for software management and distribution. Connection between the RJ-45 jack of the Toolhost SSS processor and an Ethernet port on the support LAN router provides 1000BTX interface with the support LAN.

External mass storage tape drives

DAT is a data recording medium used with the Toolhost SSS. Each Toolhost SSS) DAT drive permits data recording on removable 4 mm digital audiocassette tapes. DAT storage capability is 36 gigabytes (GB) (native) or 72 GB (compressed) per tape. The Toolhost SSS processor provides all DAT operational control and data interfacing via USB connection.

Program replica external hard drive

The Toolhost SSS external hard drive stores site software files and provides 1 terabyte (TB) of data storage capacity. This hard drive maintains a replica of all application specific and commercially available software required for restoration of any system processor. The external hard drive typically connects to the Toolhost SSS processor via the front USB port.

NOTE: The STARS ELITE site support workstation incorporates all TTSE/SIM programs, such as ATCoach and the Map Generator program into a single processor.

Test and Training Simulator Equipment Workstation

TTSE/SIM workstation provides a software/program host, instructor/supervisor interface, and processing control for site test and training functions. ATCoach simulation software provides test or training simulation data at one or more designated workstations at the site and instructor/supervisor

control at the TTSE/SIM. The TTSE/SIM includes a TTSE/SIM processor, data entry equipment (keyboard and mouse), and a color monitor. The TTSE/SIM is typically a table-mounted workstation. ATCoach software, resident at the processor and operating in a Solaris environment, provides the flight data simulation required for test and training exercises. This simulation system works in conjunction with the AS to provide artificially generated radar and inter-facility message data for test, certification, and training. The data format is identical to that of live radar and message data normally fed to the AS. The simulation data goes to both the FS CGW and the EES CGW processors. ATCoach consists of the scenario data preparation system and the event engine.

Scenario data preparation system

The scenario data preparation system is used to define the simulation exercise actions or events and includes: the introduction and movement of aircraft, weather activity, and pre-programmed events such as generation of simulated inter-facility messages.

Event engine

The event engine is the core of the ATCoach simulation system. It creates and maintains an ever-changing representation of events defined in the scenario data file. As the simulation exercise progresses, the event engine schedules and coordinates scenario events as well as dynamic events such as aircraft clearances issued by a trainee controller.

As you can see, STARS relies heavily on computer networks. This unit did not cover all of the networking components, but you have many resources available to you to help you better understand the networking components, such as commercial manuals, computer based training modules, and the experts in your work center.

Self-Test Questions

After you complete these questions, you may check your answers at the end of the unit.

411. Standard Terminal Automation Replacement System workstation theory of operation

1. What are the four types of STARS workstations?

2. What does the MCW do?

3. MCW SYS 1 processors access what LAN?

4. MCW SYS 2 processors access what LANs?

5. What has happened when the SMC manager fails to receive heartbeats for a specified length of time?

6. What does the TCW do?

7. In a TCW, what does the DEC provide?

8. What does a TDW provide?

9. At what temperature does the TDW display fan turn on?

10. Why does the RTDW require a layer 3 fast Ethernet switch/router?

11. Which workstation provides flexible general purpose processing to support SOS operations and maintenance as required?

412. Site support subsystem

1. What is the capacity of the Toolhost SSS DAT tape?

2. What is the purpose of the ATCoach software?

3. What do simulation exercise actions and events include?

Answers to Self-Test Questions

409

1. Up to 1350.
2. (1) SCSC.
   (2) OSF.
   (3) STARS Operational Site.
3. STARS field support and hardware/software development.
4. The Navy OSF.
5. Accepts and processes radar and flight data to provide ATC and system information to the controllers and external systems.

410

1. (1) NAS information.
   (2) ETMS data.
   (3) Interfacility flight data necessary for accurate aircraft tracking.
2. TAS and the SSS.

3. (1) Radar data display.
   (2) Flight data interface and display.
   (3) Operator interaction.
   (4) Data recording.
   (5) Status monitoring and system control.
4. FSL and ESL.
5. RDP, monitoring, and CHI functions.
6. Software support for the site and site-to-site data communication for software distribution.

411

1. (1) MCW.
   (2) TCW.
   (3) TDW.
   (4) GPW.
2. Uses maintenance, control, and display portions of the software to provide AS configuration control and status monitoring in an X-Windows environment.
3. FS LAN A and FS LAN B.
4. EFS LAN A and EFS LAN B.
5. The non-reporting subsystem has catastrophically failed.
6. It is the “Radar Scope” that permits an operator to track aircraft and provide directions to pilots of aircraft entering, flying within, and exiting the terminal area.
7. It provides the capacity for controlling up to three keyboards and trackballs and interfaces these devices into a single serial interface at the rear of each processor.
8. It accesses the LANs to display processed radar data at the TDW monitors in the tower cab.
9. When the heat sink temperature reaches 95° F.
10. To handle the T1 modem input in RS–232 format and can convert the output to Ethernet for the processor.
11. GPW.

412

1. 36 GB (native) or 72 GB (compressed) per tape.
2. Provides test or training simulation data at one or more designated workstations and instructor/supervisor control at the TTSE/SIM.
3. The introduction and movement of aircraft, weather activity, and pre-programmed events.

Unit Review Exercises

Note to Student: Consider all choices carefully, select the *best* answer to each question, and *circle* the corresponding letter. When you have completed all unit review exercises, transfer your answers to the Field-Scoring Answer Sheet.

Do not return your answer sheet to AFCDA.

29. (409) How many airborne aircraft is the Standard Terminal Automation Replacement System (STARS) capable of tracking simultaneously within a terminal area?
    a. Up to 1350.
    b. Up to 1450.
    c. Up to 1550.
    d. Up to 1650.

30. (409) How many miles is the area of coverage for the Standard Terminal Automation Replacement System (STARS)?
    a. 300 by 300.
    b. 400 by 400.
    c. 500 by 500.
    d. 600 by 600.

31. (409) How many Standard Terminal Automation Replacement System (STARS) geographic regions are there in the United States?
    a. 6.
    b. 7.
    c. 8.
    d. 9.

32. (409) Which is *not* a basic element of the Standard Terminal Automation Replacement System (STARS)?
    a. STARS Operational Site (SOS).
    b. Operational Support Facility (OSF).
    c. STARS Central Operational Site (SCOS).
    d. STARS Central Support Complex (SCSC).

33. (409) What element of the Standard Terminal Automation Replacement System (STARS) provides for centralized control of field support and hardware/software development?
    a. STARS Operational Site (SOS).
    b. Operational Support Facility (OSF).
    c. STARS Central Operational Site (SCOS).
    d. STARS Central Support Complex (SCSC).

34. (409) What element of the Standard Terminal Automation Replacement System (STARS) performs hardware and software maintenance, including site adaptation and site support for multiple sites?
    a. STARS Operational Site (SOS).
    b. Operational Support Facility (OSF).
    c. STARS Central Operational Site (SCOS).
    d. STARS Central Support Complex (SCSC).

35. (410) Which is *not* an element of surveillance radar data?
    a. Weather information.
    b. Primary radar returns.
    c. National Airspace System (NAS) information.
    d. Real time quality control (RTQC) to confirm accuracy of data.

36. (410) The Standard Terminal Automation Replacement System Operational Site (SOS) consists of what two subsystems?
    a. Full Service, Emergency Service.
    b. Terminal Automation Subsystem (TAS), Site Support Subsystem (SSS).
    c. Full Service LAN A (FS LAN A), Emergency Service LAN A (ES LAN A).
    d. Enhanced Traffic Management System (ETMS), Real Time Quality Control (RTQC).

37. (410) What workstation provides status monitoring, system control, and establishes the computer-human interface (CHI)?
    a. Monitor and Control Workstation (MCW).
    b. Terminal Controller Workstation (TCW).
    c. General Purpose Workstation (GPW).
    d. Tower Display Workstation (TDW).

38. (410) What Standard Terminal Automation Replacement System (STARS) service level provides a reliable, minimal function, air traffic control functionality in the event the STARS primary service level is unavailable?
    a. Full Service Level (FSL).
    b. Self Service Level (SSL).
    c. Support Service Level (SSL).
    d. Emergency Service Level (ESL).

39. (410) What Standard Terminal Automation Replacement System Operational Site (SOS) subsystem provides software support for the site and site-to-site data communication for software distribution?
    a. Site Support Subsystem (SSS).
    b. Real Time Quality Control (RTQC).
    c. Terminal Automation Subsystem (TAS).
    d. Enhanced Traffic Management System (ETMS).

40. (410) What Standard Terminal Automation Replacement System Operational Site (SOS) subsystem has a server that retains and distributes software for a site?
    a. Enhanced Traffic Management System (ETMS).
    b. Terminal Automation Subsystem (TAS).
    c. Real Time Quality Control (RTQC).
    d. Site Support Subsystem (SSS).

41. (411) The Monitor and Control Workstation (MCW) SYS 1 processor is capable of accessing which local area networks (LAN)?
    a. Support Service Level (SSL) LAN A only.
    b. Full Service (FS) LAN A only.
    c. SSL LAN A and SSL LAN B.
    d. FS LAN A and FS LAN B.

42. (411) What provides the Monitor and Control Workstation (MCW) operator with an X-Windows terminal displayed at the MCW?
    a. Control and monitor display (CMD) computer software configuration item (CSCI).
    b. System monitor control (SMC) internal solid state software.
    c. CMD adapted thresholds.
    d. SMC adapted thresholds.

43. (411) If the System Monitor Control (SMC) manager fails to receive the periodic "heartbeats" from the SMC agents, what has happened?
    a. It needs to be power-cycled.
    b. The X-Windows software needs to be updated.
    c. The non-reporting subsystem has failed catastrophically.
    d. The non-reporting subsystem has failed to connect to the remote tower beacon code blocks.

44. (411) Which Standard Terminal Automation Replacement System (STARS) workstation is the "Radar Scope" that permits an operator to track aircraft and provide directions to pilots of aircraft entering, flying within, and exiting the terminal area?
    a. Monitor and Control Workstation (MCW).
    b. Terminal Controller Workstation (TCW).
    c. General Purpose Workstation (GPW).
    d. Tower Duty Workstation (TDW).

45. (411) You *normally* see the Terminal Controller Workstation (TCW) located in the
    a. remote tower cab.
    b. maintenance support room.
    c. Radar Approach Control (RAPCON) facility.
    d. Standard Terminal Automation Replacement System (STARS) Enhanced Local Integrated Tower Equipment (ELITE) equipment rack.

46. (411) How many terminal display workstations (TDW) can the local tower local area network (LAN) switch support by 1000TBX connections?
    a. 16.
    b. 20.
    c. 26.
    d. 30.

47. (411) Where is the terminal display workstation (TDW) monitor's brightness controlled?
    a. Remote bright control box.
    b. Local brightness auxiliary port.
    c. Remote brightness auxiliary port.
    d. At the contrast/brightness control panel on the front of the Data Entry Controller (DEC).

48. (411) What is the major difference between the local terminal display workstation (LTDW) and the remote terminal display workstation (RTDW)?
    a. The LTDW requires 220 volts AC to operate.
    b. The RTDW requires 220 volts AC to operate.
    c. The RTDW requires a Layer 3 switch that can function as a router.
    d. The RTDW requires four coaxial cables (RED, GREEN, BLUE, AUX) for video signals.

49. (412) What is the storage capability for the site support subsystem (SSS) digital audio tapes (DAT)?
    a. 6 gigabyte (GB) (native) or 12 GB (compressed) per tape.
    b. 12 GB (native) or 24 GB (compressed) per tape.
    c. 18 GB (native) or 36 GB (compressed) per tape.
    d. 36 GB (native) or 72 GB (compressed) per tape.

50. (412) What site support subsystem (SSS) device maintains a replica of all application specific and commercially available software required for restoration of any system processor?
    a. Event engine.
    b. Digital audio tapes (DAT).
    c. LAN (local area network) router.
    d. Toolhost site support subsystem (SSS) external hard drive.

51. (412) What site support subsystem (SSS) system works in conjunction with the automation subsystem to provide artificially generated radar and inter-facility message data for test, certification, and training?
    a. Testing and Training Simulator Equipment/Simulation (TTSE/SIM).
    b. Test and Simulation Training Control Equipment.
    c. ATControl software.
    d. Standard Terminal Automation Replacement System (STARS) ELITE.

52. (412) As a Testing and Training Simulator Equipment/Simulation (TTSE/SIM) exercise progresses, what schedules and coordinates scenario events as well as dynamic events such as aircraft clearances issued by a trainee controller?
    a. Event engine.
    b. Digital audio tapes (DAT).
    c. Local area network (LAN) router.
    d. Toolhost site support subsystem (SSS) external hard drive.

Student Notes

Glossary of Abbreviations and Acronyms

Ω	Control
°	degree
µsec	microsecond
%	percent
Σ	Sum
A/D	Analog to Digital
ACP	azimuth change pulse
ADU	azimuth distribution unit
APM	antenna pattern measurement
AQP	azimuth quadrature pulse
ARP	azimuth reference pulse
ARTCC	Air Route Traffic Control Center
AS	automation subsystem
ASDP	advanced signal data processor
ASR	Airport Surveillance Radar
ATC	air traffic control
BNC	Bayonet Neill-Concelman
BTX	BASE-TX
C	Celsius
CCA	circuit card assembly
CDR	continuous data recording
CGW	communications gateway
CHI	computer-human interface
CMD	control and monitor display
CMS	Control and Monitoring System
COHO	coherent oscillator
CPI	coherent processing interval
CPU	central processing unit
CSCI	computer software configuration item
CW	continuous wave
DASR	Digital Airport Surveillance Radar
DAT	digital audio tape

dBi	decibels relative to isotropic
DCON	down-converter
DEC	Data Entry Controller
DIP	dual in-line package
DOD	Department of Defense
EI	emergency inhibit
ELITE	Enhanced Local Integrated Tower Equipment
ESL	Emergency Service Level
ETMS	Enhanced Traffic Management System
F	Fahrenheit
F/O	fiber optic
FAA	Federal Aviation Administration
FM	frequency modulation
FMAC	facility monitoring and control
FO	foldout
FS	Full Service
FSL	Full Service Level
GB	gigabyte
GCA	ground-controlled approach
GHz	gigahertz
GPW	general purpose workstation
Hz	Hertz
IF	intermediate frequency
IFF	identification friend or foe
kW	kilowatt
LAN	local area network
LNA	low noise amplifier
LO	local oscillator
LRU	lower replacement unit
LT	local tower
LTDW	Local Tower Display Workstation
LVA	large vertical array
Mbps	megabits per second
MCW	Monitor and Control Workstation

MDM	main display monitor
MHz	megahertz
MPS	Media Processing System
MRSM	Monopulse Secondary Surveillance Radar remote site monitor
MSA	monitor switch assembly
MSSR	Monopulse Secondary Surveillance Radar
MTD	moving target detection
MTI	moving target indicator
mW	milliwatt
NAS	National Airspace System
Nm	nautical mile
NUNIO	network universal input/output
OSF	Operational Support Facility
PAR	Precision Approach Radar
PC	personal computer
PPS	pulse per second
PRF	pulse repetition frequency
PRI	pulse recurrence interval
PRT	pulse repetition time
PSR	Primary Surveillance Radar
PW	pulse width
RAM	random access memory
RAPCON	Radar Approach Control
RCP	radar control panel
RDP	radar data processing
rpm	revolutions per minute
REX	receiver/exciter
RF	radio frequency
RFCO	radio frequency changeover
RSLS	receiver side lobe suppression
RT	remote tower
RTDW	Remote Tower Display Workstation
RTQC	real time quality control
Rx	receiver

SBC	single board computer
SCDI	site control and data interface
SCSC	Standard Terminal Automated Replacement System Central Support Complex
SDD	Situation Data Display
SDP	signal data processors
SFP	small form factor pluggable
SIF	selective identification feature
SMC	system monitor control
SOS	Standard Terminal Automated Replacement System Operational Site
SSR	secondary surveillance radar
SSS	site support subsystem
STALO	stable local oscillator
STARS	Standard Terminal Automated Replacement System
STC	sensitivity time control
TAS	Terminal Automation Subsystem
TB	terabyte
TCMM	transmitter control maintenance module
TCP	terminal control position
TCW	Terminal Controller Workstation
TDW	Tower Display Workstation
TRACON	Terminal Radar Approach Control
TTSE/SIM	Testing and Training Simulator Equipment/Simulator
Tx	transmitter
UCON	up-converter
UPS	uninterrupted power supply
USB	Universal Serial Bus
V	volts
VME	Versa Module Eurocard
VSWR	voltage standing wave ratio
WAN	wide area network

Student Notes

AFSC 1C853
1C853A 03 1901
Edit Code 01