CDC 1C853B

Radar, Airfield & Weather Systems Journeyman

Volume 2. Air Traffic Control Navigation Systems

Air Force Career Development Academy

Air University

Air Education and Training Command

1C853B 02 1908, Edit Code 01

AFSC 1C853

Author: MSgt Michael P. Webb
Msgt Troy A. Partin
334th Training Squadron
Radar, Airfield & Weather Systems School (AETC)
334 TRS/ULCA
610 Hangar Road, Building 4214
Keesler Air Force Base, Mississippi 39534-2030
DSN: 597-3118
E-mail address: 334TRS.ULCA.1C8CDCWriter@us.af.mil

Instructional Systems Specialist: Hozell Odom III

Editor: Sandra F. Glenn

Air Force Career Development Academy (AFCDA)
Air University (AETC)
Maxwell AFB-Gunter Annex, Alabama

Material in this volume is reviewed annually for technical accuracy, adequacy, and currency. For Weighted Airman Promotion System (WAPS) Specialty Knowledge Test (SKT) purposes, the examinee should check the *Enlisted Promotions References and Requirements Catalog* to determine the correct references to study.

THIS IS A THREE-volume B set career development course (CDC) that covers fundamental career knowledge you need to satisfy CDC requirements for the award of the 5-skill level in the 1C8X3 AFSC.

This volume is divided into three units that introduce you to common air traffic control navigational equipment. Older systems are discussed as well as newer Family of Systems (FoS) equipment that will eventually replace the legacy systems.

Unit 1 covers the instrument landing system (ILS) and is divided into two sections. The first section explains the AN/GRN-30 localizer system functional description, capabilities and limitations, block diagram, and theory of operations. The second section covers the AN/GRN-31 glide slope system functional description, capabilities and limitations, block diagram, and theory of operations.

Unit 2 discusses the various omni-directional navigation systems that are maintained by the 1C8X3 career field and is divided into three sections. The first section describes the Very High Frequency Omnidirectional and Radio Range (VOR) systems in use today. The second section covers the tactical air navigation (TACAN) systems. The last section discusses the Very High Frequency Omnidirectional and Radio Range Tactical Air Navigation (VORTAC) system that combines the VOR and TACAN systems.

Unit 3 covers navigational flight inspections and is divided into two sections. The first section covers the flight inspection standards, general information, and specialized information for various types of navigational equipment. The second section covers historical and facility records with emphasis on procedures for maintaining the records correctly.

A glossary is included for your use.

Code numbers on figures are for preparing agency identification only.

The use of a name of any specific manufacturer, commercial product, commodity, or service in this publication does not imply endorsement by the Air Force.

To get a response to your questions concerning subject matter in this course, or to point out technical errors in the text, unit review exercises, or course examination, call or write the author using the contact information provided in this volume.

NOTE: Do not use Air Force Instruction (AFI) 38-402, *Airmen Powered by Innovation and Suggestion Program,* to submit corrections for printing or typographical errors. For Air National Guard (ANG) members, do not use Air National Guard Instruction (ANGI) 38-401, *Suggestion Program.*

If you have questions that your supervisor, training manager, or education/training office cannot answer regarding course enrollment, course material, or administrative issues, please contact Air University Educational Support Services at http://www.aueducationsupport.com. Be sure your request includes your name, the last four digits of your social security number, address, and course/volume number.

For Guard and Reserve personnel, this volume is valued at 16 hours and 4 points.

NOTE:

In this volume, the subject matter is divided into self-contained units. A unit menu begins each unit, identifying the lesson headings and numbers. After reading the unit menu page and unit introduction, study the section, answer the self-test questions, and compare your answers with those given at the end of the unit. Then complete the unit review exercises.

Page

Unit 1. Instrument Landing System 1-1

1–1. Localizer AN/GRN–30 1-1

1–2. Null-Reference Glide Slope/Capture-Effect Glide Slope, AN/GRN–31 1-36

Unit 2. Very High Frequency Omnidirectional and Radio Range Tactical Air Navigation Systems 2-1

2–1. Very High Frequency Omnidirectional and Radio Range System 2-1

2–2. Tactical Air Navigation System 2-9

2–3. Very High Frequency Omnidirectional and Radio Range Tactical Air Navigation System Equipment Configurations 2-28

Unit 3. Navigational Flight Checks 3-1

3–1. Navigational Flight Inspections 3-1

3–2. Historical and Facility Records 3-28

Glossary G–1

Unit 1. Instrument Landing System

1–1. Localizer AN/GRN–30 1–1
201. Functional description 1–1
202. Capabilities and limitations 1–4
203. Block diagram and theory of operation 1–5
1–2. Null-Reference Glide Slope/Capture-Effect Glide Slope, AN/GRN–31 1–36
204. Functional description 1–36
205. Capabilities and limitations 1–38
206. Block diagram and theory of operation 1–39

THE INSTRUMENT LANDING SYSTEM (ILS) is a precision-approach system designed to place an aircraft in a position to land under low ceiling and visibility conditions. You accomplish this by furnishing extremely accurate alignment and rate of descent information during an aircraft's runway approach. The ILS uses specialized antenna arrays to shape transmitted very high frequency (VHF) signals into a pattern, which provides directional guidance information. Receiver equipment aboard the aircraft translates these signals and provides the pilot with a visual presentation of the position of the aircraft in relation to the proper approach. By proper interpretation of the indications presented, the pilot can align the aircraft with the runway centerline (CL) at the correct rate of descent (glide path).

This unit briefly reviews the facilities and operations that make up an ILS, AN/GRN–29. The facility that provides horizontal guidance and station identification (ID) to landing aircraft is the localizer, AN/GRN–30. While the localizer provides horizontal guidance, the glide slope provides vertical guidance to landing aircraft. In the ILS, the glide slope is designated as the AN/GRN–31.

A detailed description of flight inspection requirements is presented later in this volume; but first, it is necessary to discuss some general information on the various ILS components and ground check requirements. Remember, you must consult the appropriate instructions, manuals, and technical orders (TO) when performing any of these tasks. Additionally, in case there are any discrepancies in procedures, the appropriate directives and technical publications always take precedence over the information in this text.

1–1. Localizer AN/GRN–30

This section provides an overview of the localizer. The localizer is primarily made up of a shelter and the transmitting equipment within it, to include the antenna array. Remember, the overall purpose for the localizer and its various components is to provide safe and reliable navigational signals to landing aircraft.

201. Functional description

As we describe a localizer station, you will probably find that your station is not quite the same. Local requirements may specify something different at your location. In order to get a basic concept of the system, we will take a look at the standard installation, beginning with the shelter.

The shelter

Figure 1–1 shows the localizer equipment shelter. Generally, the shelter is painted international orange and white, though some bases have spent the extra money to alter the paint to match their paint scheme. The shelter is constructed of fiberglass and steel.

The shelter houses power switching, lighting, environmental controls, and two equipment cabinets that contain the ILS electronic equipment and a workbench with electrical outlets. The shelter is

normally offset a minimum of 250 feet from the center of the localizer antenna array, which is located 600 to 2,000 feet beyond the runway stop end, and aligned with the extended runway centerline.

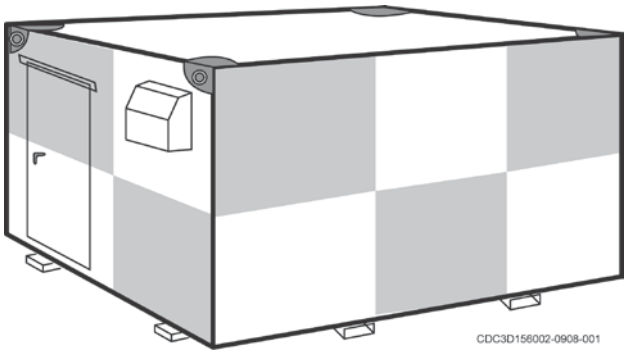

Figure 1–1. Localizer equipment shelter.

NOTE: According to the current Unified Facilities Criteria 3–260–01, *Airfield and Heliport Planning and Design*, the localizer shelter at your location must be 250 feet or more away from the extended runway centerline. A waiver must be in place for a shelter to remain less than 250 feet from the extended runway centerline.

Power inputs

The primary power is fed to the shelter's external junction box, then by conduit to the inside of the shelter. Power requirements are 115/225 volts alternating current (VAC) ±10 percent, 50 ±3 hertz (Hz) or 60 ±3 Hz, and 3-phase at 100 amperes (A). The shelter is equipped with an alternating current (AC) distribution panel, consisting of a 100A main circuit breaker, and additional circuit breakers for station power distribution. The shelter junction box distributes control and input power. There are four 12-volt batteries located within the shelter that supply emergency power.

Equipment cabinets

There are two equipment cabinets located in the shelter (fig. 1–2). One cabinet contains the course equipment and the control unit. The second cabinet contains the clearance equipment. Both cabinets have a power supply at the bottom. Each is a steel rack-type cabinet measuring 78-¼ inches high, 24 inches wide, and 19-¼ inches deep. The cabinets accept the standard 19-inch-wide rack-mounted equipment. Course and clearance transmitter outputs are routed to the junction box through conduit connected to the top of the course equipment cabinet. The input signal wiring is connected to terminal boards near the top and bottom of the cabinet sides. The clearance signals are routed to the clearance cabinet by an interconnecting cable, through holes in the adjacent sides near the bottom of the cabinets. Later, within the unit, a description of each unit installed in the cabinets is provided.

Antenna array

The antenna array is a 14 log-periodic dipole (LPD) antenna system, shown in figure 1–3. Each antenna is supported by two assemblies, which are frangible and will break off if an aircraft should hit an antenna. Transmitting and monitoring signals to and from the antennas are routed through the antenna distribution box (shown in the center of the antennas at ground level). The 14 LPD antennas are each fed the necessary amplitude and phased transmitter outputs from the distribution box to form the required radiation patterns.

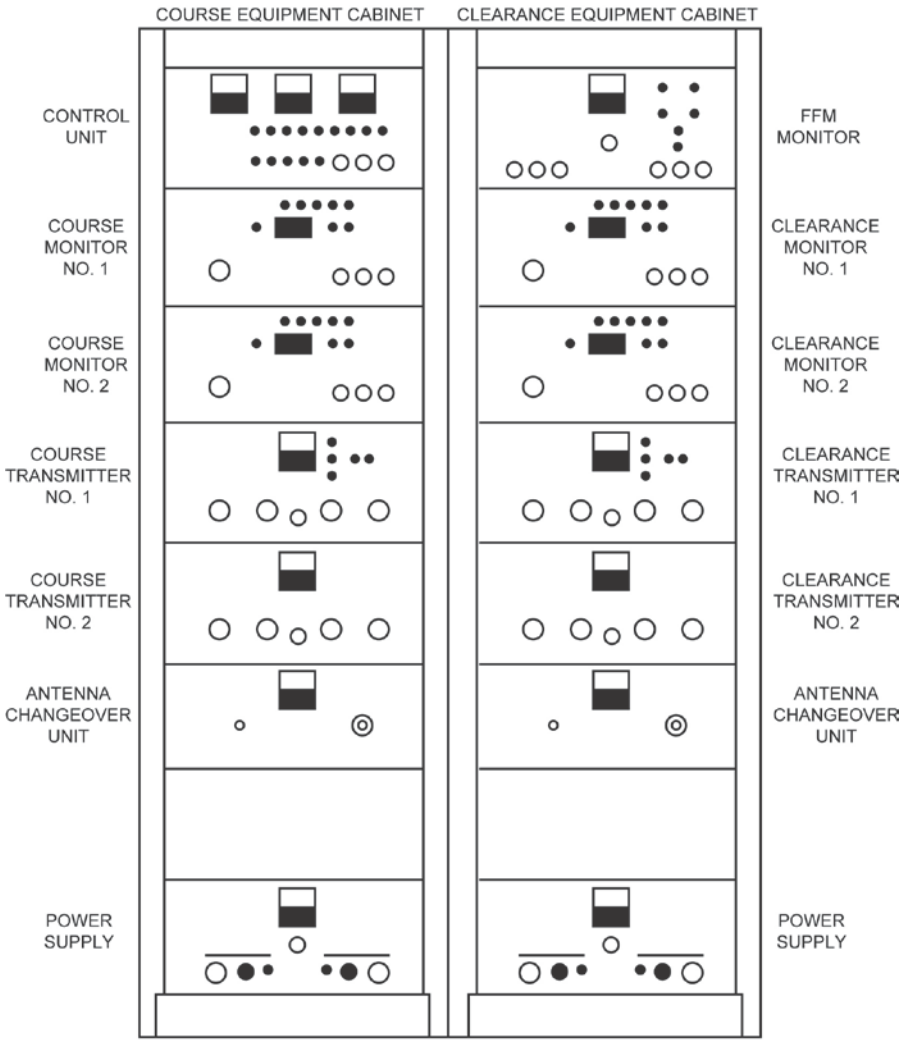

Figure 1–2. Equipment cabinets in shelter.

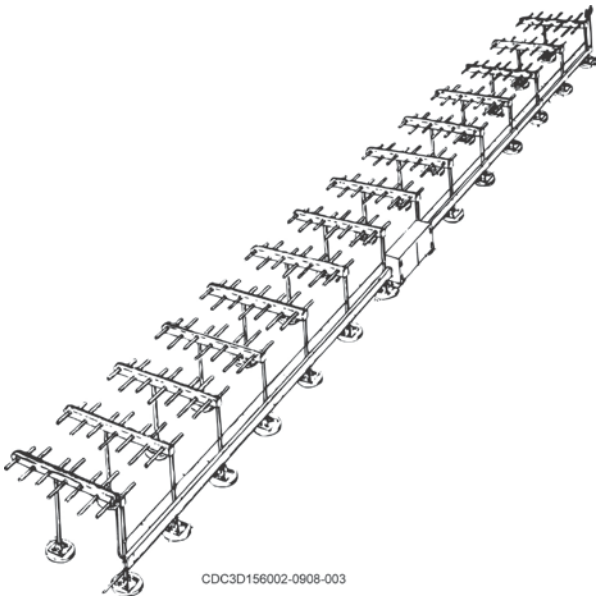

Figure 1–3. Localizer antenna array.

202. Capabilities and limitations

You can find a detailed discussion of the technical characteristics of the AN/GRN–30 in TO 31R4–2GRN30–2–WA–1, *Combined Maintenance Operation Instruction, Radio Transmitting Set (Localizer Station)*. This lesson will only study those characteristics most commonly used at the intermediate maintenance level; we will begin this lesson with a description of the localizer station.

Localizer station

The localizer station is designed for continuous unmanned operation. It can be controlled either locally from the site, remotely from the control tower, or from the radar approach control (RAPCON) facility. The station is capable of operating in the frequency range of 108 to 112 megahertz (MHz), and the radiation pattern is horizontally polarized. The carrier is amplitude modulated (AM) with 90 Hz, 150 Hz, and 1,020 Hz to a depth of 20 percent, 20 percent, and 5 percent, respectfully. The ID consists of 1,020 Hz coded into Morse code elements assigned as the station ID. The system is capable of operating at temperatures ranging from 14 to 122 degrees (°) Fahrenheit (F) at altitudes from 0 to 10,000 feet. The system can withstand winds of 70 miles per hour (mph) and a buildup of ½-inch of ice on the antennas.

Dual instrument landing system configuration

Due to local weather conditions, some runways require precision approach landing from either end of the runway. In these areas, a dual ILS configuration is used. A complete ILS is installed at both ends of the runway facing each other. The air traffic control (ATC) personnel select which runway to use depending on the prevailing winds. This presents a unique problem, as these systems are on identical frequencies. Due to the safety concerns with localizers radiating at each other, interlocks are used to prevent two systems from being on at the same time. The interlock control unit is installed in conjunction with the remote control/display unit (RCDU), and it sends out a status tone (900 Hz) to the selected system (localizer and glide slope). When 900 Hz is sent to a system's control unit, the system's circuitry allows the system to radiate. When 900 Hz is missing, the control unit prevents the transmitters from turning on. A redundant mechanism called the interlock subassembly is located at the localizer. The 900 Hz from the tower is routed to this assembly, and when present it connects the carrier-plus-sideband (CSB) and sideband-only (SBO) outputs to the antenna array. If 900 Hz is not present, the interlock subassembly will automatically dummy load the CSB and SBO, preventing any radiation from escaping the localizer station.

Control unit

The control indicator produces four output status tones: 705 Hz, 1,410 Hz, 2,820 Hz, and 2,256 Hz to indicate equipment status to the ATC facility's RCDU. If an alarm occurs, the control unit alerts the remote control unit and activates both alarm lights and an audible alarm at the tower. If a dual monitor fault occurs, the control indicator initiates a transfer to the standby (STDBY) transmitter within four seconds. The actual delay from the main transmitter shutdown to the STDBY transmitter on is 20.3 seconds.

The control unit responds to two input control frequencies, 900 and 1,175 Hz. The 900 Hz is the interlock frequency and the 1,175 Hz are the remote control frequency. The interlock frequency is used in a dual ILS configuration to prevent facing localizers from radiating each other. The 1,175 Hz control tone is sent by the RCDU at the tower to cycle the transmitters on and off.

The control indicator contains three front panel meters used during preventive maintenance inspections (PMI). They are the primary power meter, battery voltage meter, and battery current meter.

Radio transmitters

The radio transmitters are single-channel, thumbwheel controlled, with a frequency range of 108 to 112 MHz. One is the course and the other is the clearance transmitter.

The course transmitter has two radio frequency (RF) outputs connected to the localizer antenna system. The CSB output is an amplitude-modulated signal. The modulation frequencies are 90 Hz, 150 Hz, and 1,020 Hz (used for ID). The SBO output is a double sideband with a reduced carrier modulated by 90 Hz and 150 Hz. Nominal CSB output power is 15 watts (W) adjusted for proper useable distance. SBO power is set for proper course width. Course width is defined as the area in the radiation pattern below .155 difference in depth of modulation (DDM); this is where the pilot's instruments provide guidance (needle movement). Areas outside the prescribed course width (above .155 DDM) will peg the guidance needle to one side or the other. SBO power has a direct effect on the course width. The amount of SBO power needed to maintain proper course width is dependent on runway length; therefore, it is different at every base.

The clearance transmitter has two RF outputs connected to the localizer antenna system. CSB output is an amplitude-modulated signal. The modulation frequencies are 90 Hz, 150 Hz, and 1,020 Hz (used for ID). The SBO output is a double sideband with reduced carrier modulated by 90 Hz and 150 Hz. Nominal CSB output power is 10 W adjusted for proper useable distance. SBO power is set for proper clearance width.

Radio frequency monitors

The monitors contain the circuitry necessary to check course difference in depth of modulation (COURSE DDM) at centerline and the half-width point difference in depth of modulation (WIDTH DDM), the identification percent of modulation (ID % OF MOD), 90 Hz and 150 Hz total percent of modulation (MOD %), the carrier power (RF LEVEL), the frequency separation (FREQ SEP) (course to clearance), and the antenna faults.

Radio frequency transmission switch

Also commonly referred to as "the changeover unit," the RF transmission switch offers 50-ohm (Ω) impedance at 108 to 335.4 MHz. It provides a mechanism (through relays) for the control unit to switch the radiating transmitters, a 25 and a 5 W dummy load for the STDBY equipment, and a wattmeter for equipment RF power alignment.

Antenna group

The antennas offer a horizontal coverage of ±35° with a vertical coverage of ±7°. The coverage limits are more than 18 nautical miles (nm) within ±10° of the runway centerline, and more than 10 nm between 10° and 35° on both sides of the centerline.

203. Block diagram and theory of operation

This lesson takes an overall look at the localizer theory of operation. Throughout this lesson, you will examine the functional block diagram of the localizer station, but we will begin with basic operations of the localizer station.

Localizer station basic operations

The localizer station transmits final approach course information to landing aircraft. The basic operations provided by the localizer station are subdivided into three general functions: radiating the pattern, monitoring the pattern, and controlling the transmitter.

Radiating the pattern

The first basic operation of the localizer station is to generate the composite localizer radiation pattern. This pattern is an electronic course that provides an extension of the runway centerline. The functions required to radiate the pattern are power distribution, signal generation, signal distribution, and signal radiation.

Power distribution

In order to radiate the pattern and perform the other operations, the first requirement is to distribute power throughout the equipment. The four station direct current (DC) power supplies (two per drawer) are connected in parallel at the power relay assembly. This allows any two-power supplies to power the entire station, if necessary. There is also an emergency battery system that powers the station in the event of a commercial AC power failure. The power supplies continually supply a charge current to the batteries that along with battery voltage is displayed in meters within the control unit.

Signal generation

The first signal you need to generate is the transmit (Tx) frequency. The localizer is capable of transmitting on various channels ranging in frequency from 108 to 112 MHz. The localizers used by the Air Force (AF) are dual-frequency stations that radiate both course (CRS) and clearance (CLR) carriers. The CRS carrier is transmitted at 4.75 kilohertz (kHz) above the station assigned frequency (SAF), while the CLR carrier is transmitted at 4.75 kHz below the SAF. By radiating two carriers, a situation is created where the aircraft receiver is controlled by the stronger of the two carriers, which we call the capture-effect. The capture-effect concept allows the ILS to have one signal CRS that provides for most guidance and usable distance (18 nm), yet still maintain enough signal strength to provide guidance information at outer left and right edges of the coverage area CLR.

Both the CRS and CLR carriers consist of two RF signals. One of the signals, which is amplitude modulated by 90, 150, and 1,020 Hz, is the CSB signal. The 90- and 150-Hz sidebands of the CSB ultimately provide the reference (REF) for the space modulation that occurs after the signals are radiated. The 1,020 Hz is coded to provide the station ID. The second RF signal resembles a double-sideband suppressed carrier in that only 90- and 150-Hz sidebands of the carrier are transmitted; consequently, this signal is called the SBO. It is the space modulation of the CSB 90- and 150-Hz sidebands with the SBO 90- and 150-Hz sidebands, which provide navigational information. After the four signals (CRS CSB, CRS SBO, CLR CSB, and CLR SBO) are generated, they need to be distributed to the appropriate locations.

Signal distribution

The power levels of the four signals are critical in providing the proper indications to aircraft within the radiation pattern. The changeover unit provides the ability to measure the signal's power and routing of the on-air transmitter to the distribution unit and ultimately the antenna. The phase relationship between the CSB and SBO signals is also very important in achieving the desired space modulation. The distribution unit has both a distribution network and the cables that feed the signals to the antennas. Both can be adjusted for the proper phase relationships.

Signal radiation

The 14 LPD antennas radiate both the CRS and CLR signals. A point to remember is that the CRS and CLR signals do not combine but remain two distinct radiation patterns in the same area of space, because they are at different frequencies. Additionally, the radiation pattern of the clearance carrier is wider than the course pattern. The CSB signals are radiated in different phase relationships than the SBO signals, thus (in a sense) they are radiated separately as well. It is the space modulation of the separately radiated CSB and SBO signals that provides the location dependent navigational information where the detected 90 Hz is predominant on the pilot's left side and the detected 150 Hz is predominant to the right.

Monitoring the pattern

The second basic operation of the localizer station is to monitor the composite localizer radiation pattern. The three functions required to monitor the pattern are detect the signals/pattern, recombine the signals, and monitor the signals. Signals that will be radiated by the localizer are monitored before they are radiated; this process is known as integral monitoring.

Detecting the signals

A monitoring or sampling probe located in each LPD antenna provides samples of the radiated signals back to the distribution box. One advantage of using sampling probes in the antenna is that they are subject to less interference.

Recombining the signals

Since the signals were distributed to the antenna to provide a specific radiation pattern, in order to effectively monitor the sampled signals, they must be recombined in such a manner as to duplicate signals at various checkpoints within the radiation field. The sample signals are combined in the recombination unit and then sent to the dual-frequency radio frequency detector unit (RDU).

The dual-frequency RDU receives samples of the radiated CSB and SBO signals from the RF combiner assembly. It combines these signals with SAF samples from the CRS and CLR transmitters and produces audio intermediate frequency (IF) signals for the AN/GRN–30 monitor assemblies. The combined signals are sent to the localizer monitors for alarm signal processing.

Signal monitoring

The ultimate goal of the signals radiated by the localizer is to provide a safe, reliable navigational signal that guides aircraft to and along the extended runway centerline. If the radiated signals are not within certain specified limits or tolerances, then the navigational information becomes unsafe and unreliable. It is essential to check the various characteristics of the radiation pattern to ensure their accuracy. The reason for detecting the signals is so they can be monitored. Both the CRS and CLR monitors compare the detected signals against preset limits in the monitor. Parameters checked in both monitors include the following:

- Carrier power RF LEVEL.
- Course width DDM (WIDTH DDM).
- DDM at centerline (COURSE DDM).
- ID % OF MOD.
- Total 90 and 150 Hz MOD %.

An additional function of the CRS monitor is to monitor the integrity of the antenna cables. The CLR monitor also has an additional function, which is to monitor the frequency difference between the CRS and CLR carriers.

If any of the signals or parameters does not fall within preset limits, you do not want aircraft using the navigational information the signals provide. If an out-of-tolerance condition exists, you want to either transfer the equipment to the STDBY transmitter or shut the transmitter off. Transfer and shutdown are two of the functions performed by transmitter control.

Controlling the transmitter

The third basic operation of the localizer station is to control the main and STDBY transmitters. The control unit provides the switching function for the transmitting equipment. There are three ways to control the system—automatic, manual, and remote.

Automatic station control

If two like monitors in the monitoring system detect a fault in the transmitted signal, the monitors' signals to the control unit will cause the control unit to transfer operation to the STDBY transmitters or it will shut down the equipment. The monitors are redundant and will not initiate an equipment transfer unless both of the course monitors or both of the clearance monitors detect a fault. This prevents a faulty monitor from initiating either a transfer or shutdown.

Manual station control

The control unit selects the main and STDBY transmitters and indicates which one is operating. It also provides the station cycle capability to transfer transmitter operational status in the sequence MAIN to OFF to STANDBY to OFF to MAIN. So, what are main and STDBY transmitters? Well, the CRS and CLR transmitters operate in pairs. CRS transmitter number 1 operates with CLR transmitter number 1. In the same way, CRS and CLR transmitter number 2 operate simultaneously. The control unit controls the CRS transmitter, which, in turn, controls the CLR transmitter.

Remote station control

The capability also exists for remote manual control of the system through the remote control unit located at the ATC tower or RAPCON. This works by pressing the station cycle button to step the transmitter station status. Functionally, it works the same as manual station control. The equipment shelter also provides an intercom connection from the localizer, glide slope, or marker beacons to the remote control unit to facilitate communications between users and maintainers.

Localizer functional block diagram

The previous lesson discussed various functions of the basic operations for the localizer station. Now, you will see how those functions relate to the localizer functional block diagram, shown in figure 1–4, which illustrate signal flow throughout the localizer.

Power distribution

In the bottom right portion of figure 1–4, you will find the CRS and CLR power supplies and the battery. Notice that each unit supplies +27 V to the power relay assembly. The output at the top of the power relay assembly represents the +27 V sent throughout the equipment, which you may notice in various locations. Now, look at the top left input, “Relay Voltage,” to the power relay assembly. When this voltage drops to 21 volts direct current (VDC) (due to discharge while AC power is missing), the battery is disconnected.

Course and clearance transmitters

The CRS and CLR transmitters are shown horizontally, almost in the middle of figure 1–4. Trace the bottom inputs to the CRS transmitters back to where they came from. The control unit controls the CRS transmitter. It was previously stated that the CRS transmitters controls the CLR transmitters. The left input to CLR number 1 and the bottom input to CLR number 2 come from their respective CRS transmitter. One thing not mentioned earlier, and is not shown in the diagram, is that the CRS transmitters also supply the CLR transmitter with the transmitted audio (90, 150, and 1,020 Hz), which are used in making the clearance CSB and SBO signals. Each transmitter sends out their generated CSB and SBO signals to the changeover unit.

Changeover unit

The changeover unit transfers the outputs of either transmitter number 1 or 2 to the antenna. The changeover control can be traced back to the control unit. The changeover unit also has a dummy load so that whichever transmitter is not routed to the antenna can be operated for maintenance or alignment. The signals to be radiated are sent to the antenna distribution unit.

Antenna distribution unit

The antenna distribution unit (top center) is part of both the radiating and monitoring operation. The signals are sent to the antennas, and the detected signal is routed (left outputs) to the CRS and CLR monitors.

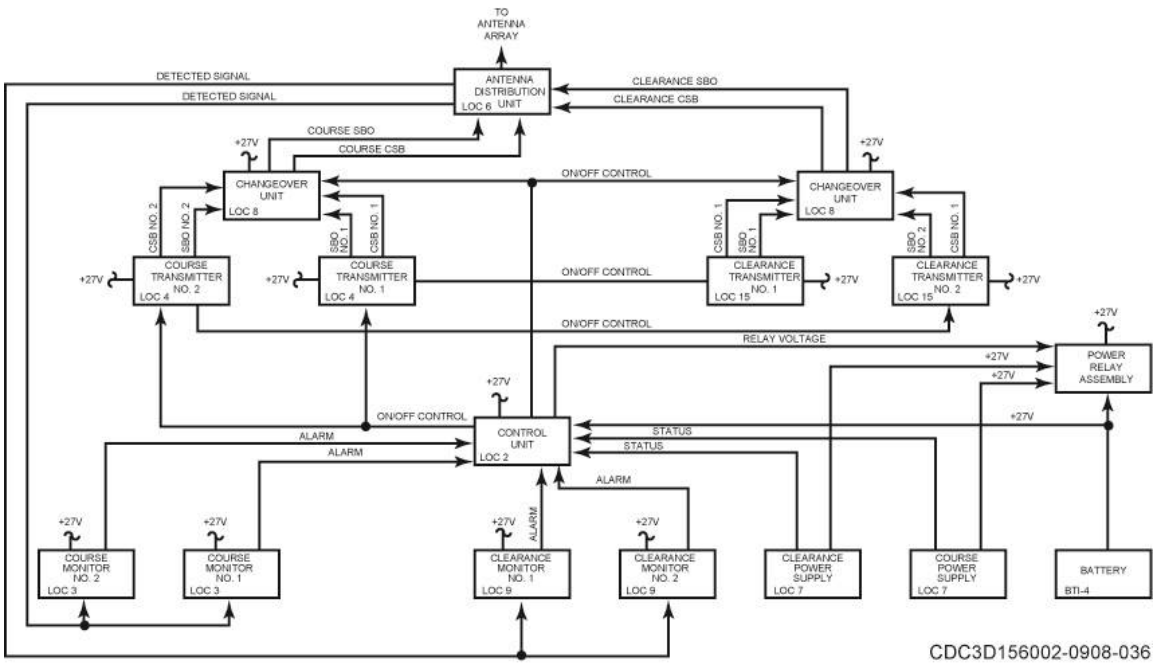

Figure 1–4. Localizer station block diagram.

Monitors

At the bottom left of figure 1–4 are the CRS and CLR monitors. Each monitor has an ALARM output at the top that goes to the control unit.

Control unit

Each unit discussed, except the distribution unit, is tied to the control unit in some fashion. Even the power supplies have a STATUS line going to the control unit.

Power supplies

The dual power supply provides all regulated DC for the electronic components of the localizer station. It also keeps the backup batteries charged. The power supply in the clearance cabinet is identical to the power supply in the CRS cabinet. The power supply's output is adjustable but is normally set to produce +27 VDC system operating voltage. The power supplies are redundant for maximum reliability. Each power supply unit contains two separate power supplies. The DC outputs of each power supply are connected in parallel in the power relay assembly. When the station main AC/DC switch is closed, a power relay energizes and connects the positive side of the battery through the relay contacts to the power supply outputs. Since the battery output and all four-power supply outputs are interconnected, anyone of the four can fail without causing a station failure or transmitting equipment transfer.

Course transmitter

The CRS transmitter produces the course signal for the localizer station. Normal CSB power is set to approximately 15 W and SBO power is set to approximately 360 milliwatts (mW). These powers are nominal values and may vary at each installation. The CSB power is normally established for usable distance at the commissioning flight check and should be maintained at the established value. The SBO power is site dependent because it is adjusted to attain the proper or desired course width. Once the SBO power is established, it too should be maintained at that value.

Both the CSB and the SBO signals are modulated with combined 90- and 150-Hz signals, which originate in the CRS transmitter. A 1,020-Hz ID signal also originates in the CRS transmitter and is used to modulate the CSB signal for station ID. The subassemblies within the transmitter are the

synthesized frequency source, diode switching network, RF amplifiers, filter/detectors, 90- and 150-Hz generator, modulator, and ID keyer (fig. 1–5).

Synthesized frequency source (4A1)

The synthesized frequency source (SFS) produces the RF frequency for the CRS transmitter. The output of the SFS is determined by the position of S1 and S2. S1 is a two-position thumbwheel used to input the channel number corresponding to the SAF. S2 is a three-position switch. In these settings, CE stands for capture-effect and NR represents null-reference. The CE-HIGH setting adds 4.75 kHz to the SAF for the CRS signal in a dual-frequency system. The CE-LOW subtracts 4.75 kHz from the SAF in a dual frequency system. Finally, the NR setting causes pure SAF to be output when the system is single frequency. SAF + 4.75 kHz at 675 mW is the final output for the CRS transmitter SFS. The output is sent to the diode-switching network.

90- and 150-Hz generator assembly (4A10)

The modulation (90 and 150 Hz) required to produce the localizer signals originate within the CRS transmitter in the 90- and 150-Hz generator assembly (fig. 1–6). This assembly generates 90- and 150-Hz square waves by dividing down the output of crystal-controlled oscillator U6, which operates at 460.8 kHz. The output of the oscillator is fed to the first binary counter U1, where the crystal frequency is divided by a factor of 16. The output from U1 (28.8 kHz) is then applied to the second binary counter U2, which also divides by a factor of 16. The output of U2 (1.8 kHz) is fed to counter U3, a divide by 12 counter with divide by 2 and divide by 6 outputs. The divide-by–2 output (900 Hz) is fed to U4 and divided by 10 to provide the 90 Hz output. The divide-by–6 output (300 Hz) is fed to U8 and divided by 5 to provide a 60 Hz scope sync signal. The divide by 12 output of U3 provides the 150 Hz square-wave output.

The phase relationship of the 90- and 150-Hz signals is continuously monitored by further dividing the 90- and 150-Hz signals down to 15 Hz each. U5 divides the 90-Hz signal by 3 and then by 2 to provide 15 Hz, and U7 divides the 150-Hz signal by 10 to provide 15 Hz. Both 15-Hz signals are fed into one of the quad exclusive OR-gates of U6. If there is any difference in the phase of the 15-Hz signals, an output occurs to reset the chain of dividers. Thus, the proper phase relationship between the 90- and 150-Hz signals from the digital generator is assured.

The assembly (fig. 1–5) also contains filter networks that shape these signals into clean sine waves and sum/difference amplifiers (U11A and U11B), which create the characteristic modulation signals required for a localizer. There are also 90- and 150-Hz outputs that are sent to the CLR transmitter for creating the clearance characteristic modulation signals.

Modulator assembly (4A8)

Sum amplifier 4A10U11A drives comparison amplifier 4A8U2B, amplifier 4A8Q2, and power modulator transistor 4Q1. The high level of 4Q1 modulates RF amplifier assembly 4A4 by modulating the collector supply voltage with the combined 90- and 150-Hz signal. The 90- and 150-Hz signal is combined with a DC REF voltage to form a REF input signal to comparison amplifier 4A8U2B. This amplifier performs a regulating function on the CRS transmitter output. A detected sample of the output signal is also routed back to a second input of the modulator for 4A8U2B from filter/detector assembly 4A6. Similar to an automatic gain control (AGC) circuit, 4A8U2B maintains a constant output power level. A bonus from this inverse feedback technique is the nearly perfect output waveforms because of the reaction of the feedback loop. The SBO channel of the CRS transmitter is modulated and regulated identically to the CSB channel, except that this channel has the addition of 4A8U3A and 4A8U3B. The function of these components, called an absolute value circuit, is to change the input waveform from a different amplifier 4A10U11B to that shown in figure 1–5; that is, all negative swings are changed to positive.

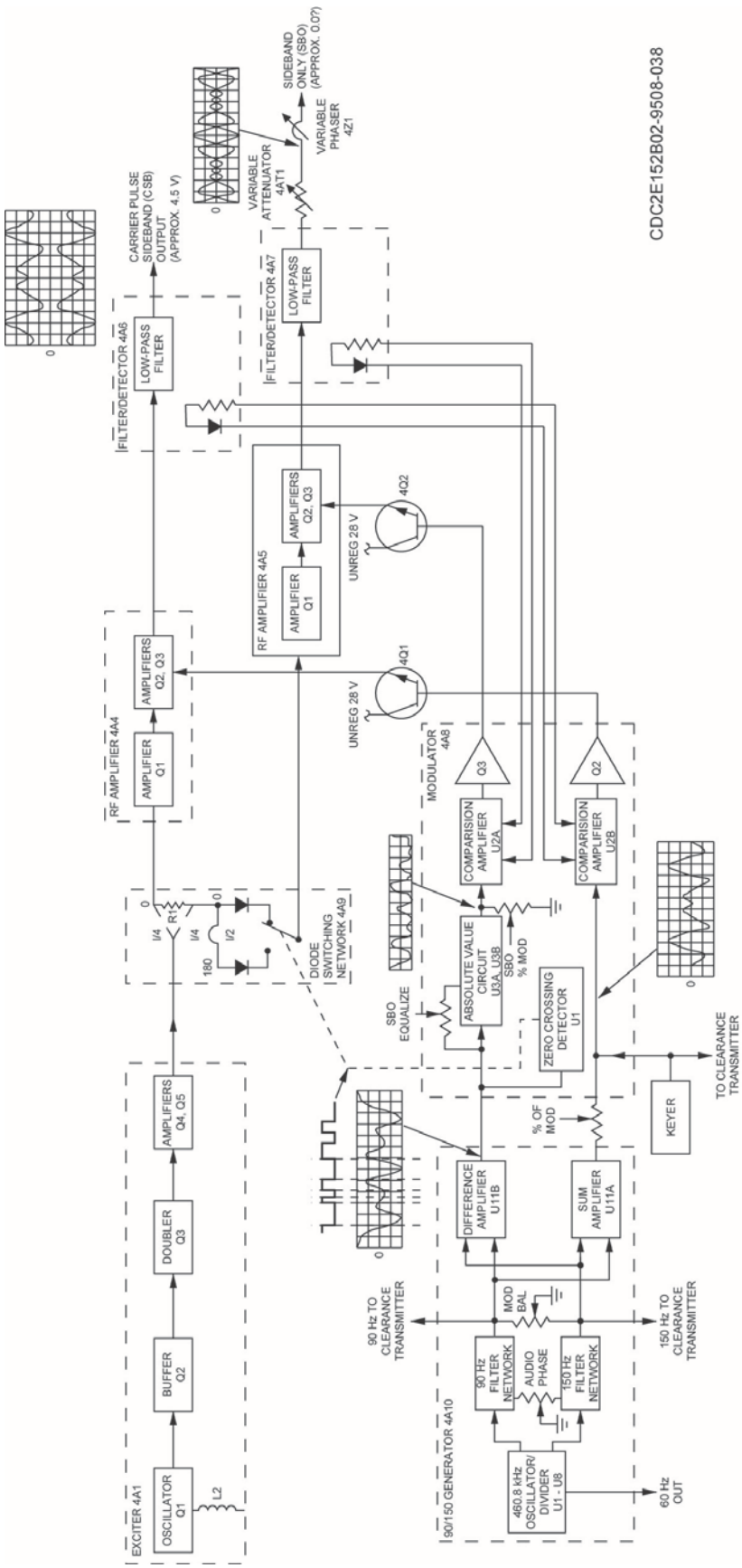

Figure 1–5. Course transmitter block diagram.

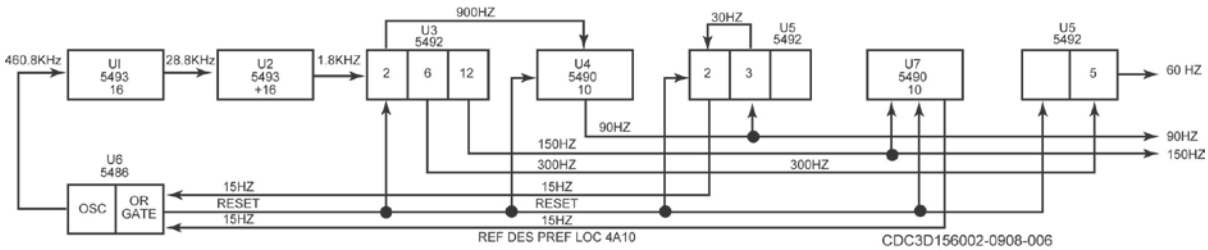

Figure 1–6. 90- and 150-Hz generator assembly block diagram.

Diode-switching network (4A9)

The diode-switching network has two functions; for simplicity, we call these functions routing and switching (fig. 1–5, 4A9). Notice that the input at the top left is RF from the synthesized frequency source. The RF input is split just after it comes into the diode-switching network. The top route is RF, which goes to RF amplifier 4A4. The RF is not changed as it is routed to the amplifier, which is why we say the first function is simply routing.

Now, go back to where the RF was split. If you take the opposite split (going down the page), you go through a diode (by the path labeled 0°), through a switch, and out to RF amplifier 4A5. If this were the only path, the RF going to 4A5 would be exactly the same as the RF going to 4A4 (notice that the path of the RF routed to 4A4 is also labeled 0°). However, there is another path for the RF to follow after the bottom split. If the switch is moved to the left, then the RF must go through a 180° length of line and the left diode before it is sent to RF amplifier 4A5. By alternately moving the switch between the two positions, the RF is switched 180° every time the switch is moved to the left. In actuality, there is no mechanical switch; instead, the diodes are merely biased on and off by the rectangular wave signal from 4A8U1, which you can see is connected to the switch by the dotted line. Nevertheless, you can still simply say the second function is switching, but it really is slightly more complex than that.

The reason the RF is switched is half of how you create the SBO signal (the other half is accomplished in RF amplifier 4A5). Before continuing, review some pertinent material you have already studied. Remember, as a result of AM, sidebands are produced, and the output frequency spectrum contains both the carrier and sideband frequencies. When we mentioned double sideband, suppressed carrier, we simply stated that the carrier was suppressed, which resulted in all the transmitter's power being applied to sidebands. How is the carrier suppressed? One method could be to use a very selective filter and filter out the carrier frequency. Both the ILS and the Very High Frequency Omnidirectional and Radio Range (VOR) use different methods to produce the same effect—separate sideband signals.

Now, think about the total sideband waveform and remember that twice for each cycle of the intelligence voltage, RF phase of total sideband component abruptly changes 180°. The amplitude of the total sideband component also varies with the intelligence voltage. Both the 180° reversal and amplitude variation are characteristic of the total sideband component—sideband only.

The intelligence voltage that switches the RF by 180° (by alternating diodes) is from the zero crossing detector (4A8U1), which changes levels twice for each cycle of the intelligence voltage. The change in levels "twice" for each cycle of the intelligence voltage, which is the 90- to 150-Hz output from difference amplifier 4A10U11B is accomplished by the zero crossing detector 4A8U1. The amplitude of the switched RF is amplified by the absolute value of the intelligence voltage in RF amplifier 4A5. The positive alternations output from the absolute value circuit, 4A8U3A/U3B, also occur twice for each cycle of the 90- to 150-Hz intelligence voltage. The output of 4A5 has the characteristics of a SBO signal.

Radio frequency amplifier and filter/detector assemblies

As described in the diode-switching network, RF amplifier 4A5 amplifies the switched RF by high-level collector modulation. Once again, because of the combined effects of the diode-switching network and the amplification in the RF amplifier, the output of 4A5 is SBO. The RF routed to RF amplifier 4A4 is amplitude modulated by the 90 + 150 Hz intelligence from the modulator card (4A8) using high-level collector modulation. Since the output of 4A4 is an AM signal, you call it what it is—CSB. Filter/detector assemblies 4A6 and 4A7 remove unwanted harmonics from output signals and provide detected sample signals used for front panel CSB and SBO audio test jacks and in modulator assembly 4A8 for automatic level control.

Identification keyer (4A2, 4A3)

First, look at figure 1–7. Clock multivibrator 4A3Q1-Q2 is the source of timing for the ID keyer. The clock output drives binary counter circuit number 1 (4A3U5 and 4A3U6), which counts the number of clock pulses and supplies information to data selectors 4A2U1 through 4A2U4. The information supplied to the data selectors from binary counter number 1 determines the length of 15-code element time slots for one section of a code group and the programmed data input that will be the controlling input. Data selectors 4A2U1 through 4A2U4 have different code segments programmed into them and all four outputs occur simultaneously. Data selector 4A2U5 uses inputs from binary counter number 2 (4A3U7) to select the correct data input line. The resulting output from 4A2U5 is one code group equal in length to 60 time slots, totaling 4.98 seconds.

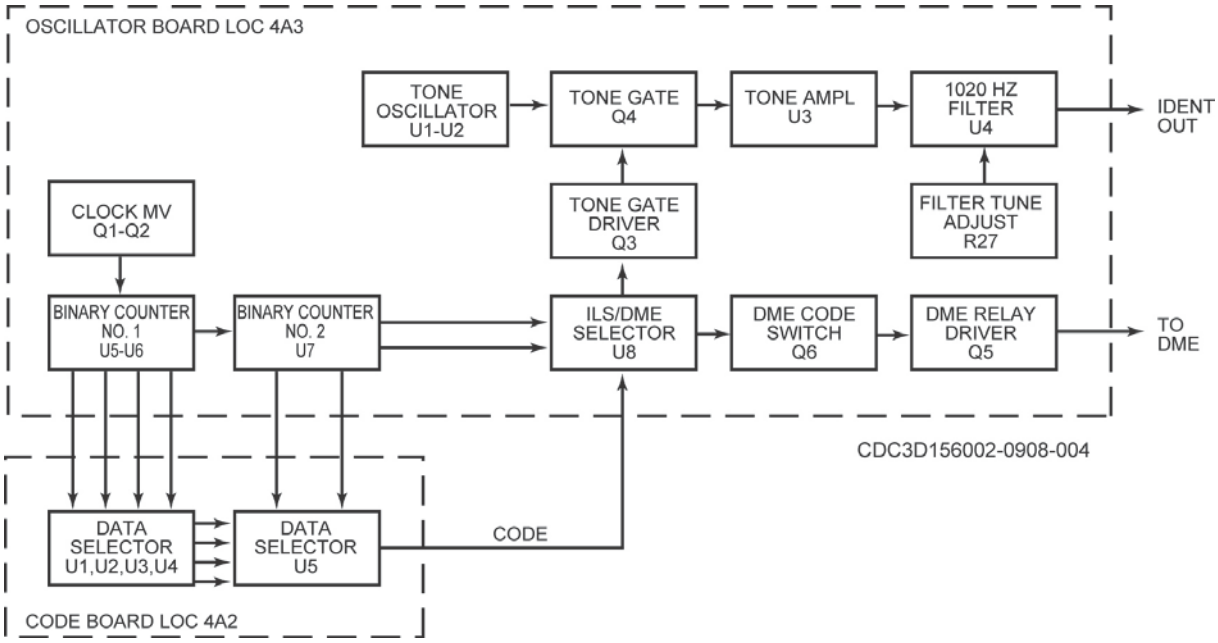

Figure 1–7. Identification circuit block diagram.

The code group routes through ILS/distance measuring equipment (DME) code selector 4A3U8 to DME code switch 4A3Q6 or tone gate driver 4A3Q3. A logic level 1 on both ILS/DME selector inputs from binary counter number 2 selects DME code switch 4A3Q6 and DME relay driver 4A3Q5, which supplies the DME with keyed ID. The presence of logic level 0 on either of two inputs to the ILS/DME selector allows the code group to turn on tone gate driver 4A3Q3, which turns on tone gate 4A3Q4. This allows the 1,020 Hz tone from tone oscillator 4A3U1-U2 to pass through tone amplifier 4A3U3 and 1,020 Hz filter 4A3U4 at a keyed rate. The keyed 1,020 Hz tone routes to the CRS modulator assembly 4A8 and the CLR modulator assembly 15A8.

Clearance transmitter

The CLR transmitter produces the CLR signal for the localizer station. Normal CSB power is set to approximately 10 W and SBO power is set to approximately 300 mW. These powers are nominal values. The CSB power is normally established for usable distance at the commissioning flight check and should be maintained at the established value. The SBO power is site dependent because it is adjusted to attain the proper or desired clearance width. Once the SBO power is established, maintain it at the established value.

Both signals modulate with combined 90- and 150-Hz signals, which originate in the CRS transmitter. A 1,020-Hz ID code also originates in the CRS transmitter and is used to modulate the CSB signal for station ID (fig. 1–8).

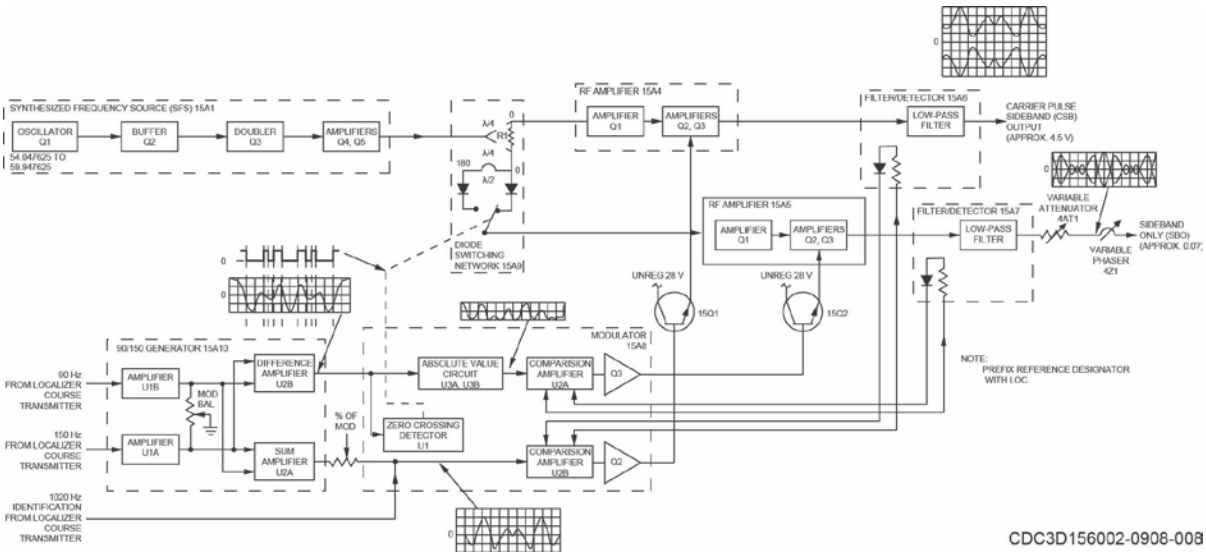

Figure 1–8. Localizer clearance transmitter block diagram.

The CLR transmitter has many cards and components that perform the same function as the cards and components in the CRS transmitter. Since you have already studied the CRS transmitter, refer back to the discussion of the CRS transmitter for discussion of the following common areas:

- RF amplifier assembly – CSB (15A4).
- RF amplifier assembly – SBO (15A5).
- Diode switching network – (15A9).
- Filter/detector – CSB (15A6).
- Filter/detector – SBO (15A7).
- Modulator card – (15A8).

The code board (A2) and oscillator-board ID (A3) slots (fig. 1–7) are not used in the CLR transmitter because ID (which those cards make) is sent from the CRS transmitter to the CLR transmitter. Of course, components in the CLR transmitter are prefixed with the REF designation of 15 instead of 4, which is used for the CRS transmitter. Although pin connections and routing of signals may be different on the schematics, the actual cards and components are basically the same. Of course, where applicable, they must be aligned to meet the requirements of the location where they are used. Now we will examine a couple of unique areas.

Synthesized frequency source (15A1)

The only difference from the CLR and the CRS SFS is S2 is placed in the CE-LOW position. The resulting output frequency of the SFS is 4.75 kHz below the assigned localizer frequency. As you may recall, the CRS transmitter output was 4.75 kHz above.

90 and 150 Hz control assembly (15A10)

The 90- and 150-Hz signals from the localizer CRS transmitter are amplified by U1B and U1A and then routed to the sum amplifier U2A and difference amplifier U2B. Both difference amplifier U2B and sum amplifier U2A algebraically add the 90- and 150-Hz tones from U1B and U1A. The output of U2B is 90 Hz minus the 150-Hz signal used to drive the SBO modulation circuits. The output of U2A is a 90 Hz plus 150-Hz signal used to drive the CSB modulation circuits.

Radio frequency changeover unit

The changeover unit is located near the bottom of the course equipment cabinet. It receives the CSB and SBO outputs from the CRS and CLR transmitters. The changeover unit has two basic functions—RF transfer and RF measurement.

Radio frequency transfer function

Referring to figure 1–9, you can see the carrier and sideband RF from each transmitter is coupled through coaxial transfer relays K1 and K2, respectively, to either the output connectors or the dummy loads. Couple to the antenna, with K1 and K2 de-energized, the number 1 carrier and sideband, with K1 and K2 energized, the number 2 carrier and sideband. Dummy load AT1 is rated at 25 W and AT2 at 5 W. Both of them are non-inductive 50Ω loads.

Radio frequency measurement function

Thru lines Z1 and Z2 are permanently installed in each output RF line, and the metering connector of each is wired to RF power switch S1. With detector elements placed in the line sections, either CSB or SBO of the radiating TX can be selected by S1 for power measurement by wattmeter M1 or for waveform observation at waveform jack J2.

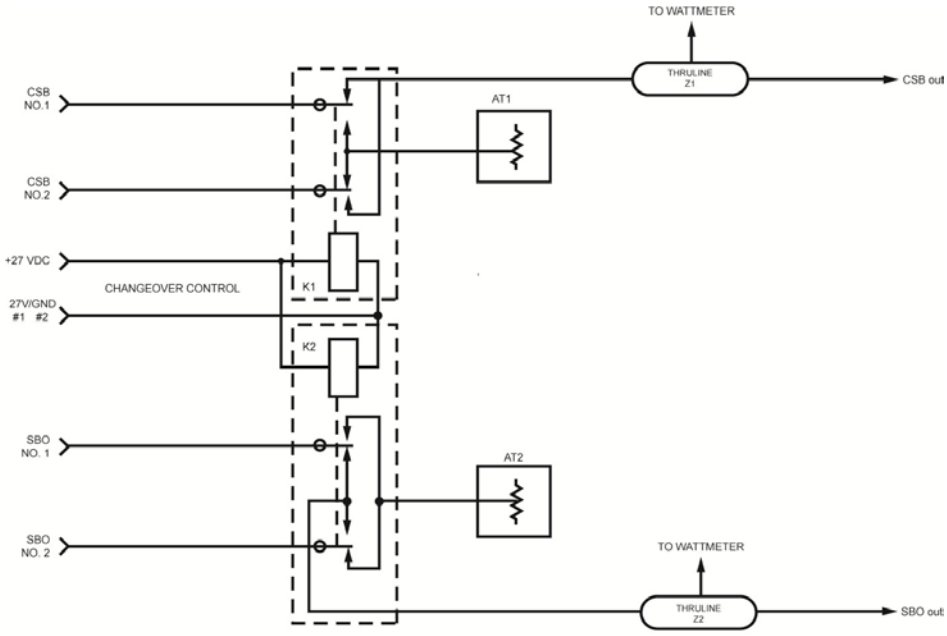

Figure 1–9. Changeover unit simplified block diagram.

Radio frequency distribution

To radiate the desired radiation patterns, the localizer antennas must receive the transmitter outputs in the proper phase and amplitude. The antenna distribution unit accomplishes this. Its purpose is to distribute the CRS and CLR transmitter outputs to the antenna array in the proper phase and amplitude. Figure 1–10 shows the RF distribution of both the CRS and CLR signals.

Course distribution

The CSB and SBO signals from the CRS transmitters connect to the CRS frequency distribution unit, which connects to several output ports. The stripline-combining network provides for phasing adjustments so the signals arrive at the antenna in the proper phase relationship.

The CSB feeds in-phase to the inner 6 antenna pairs at the relative amplitudes indicated in figure 1–10, but the SBO is fed to all antennas. The left antennas feed SBO that is 180° out-of-phase with the SBO fed to the right antennas at the relative amplitudes shown. The phase of the SBO to CSB is 90° (referencing to the CSB 90-Hz component). The left antenna's' SBO leads CSB by 90° while the right antenna's' SBO lags the CSB by 90°. A common method of making sure the signals arrive at the antenna in the proper phase relationship is trimming the antenna feed lines.

Clearance distribution

The CSB and SBO from the CLR transmitters connect to the distribution unit where they combine with the CRS signals (fig. 1–10). The CLR signals are applied to antenna pairs 1–5 with the same phase relationship as that of the course and with the relative amplitudes shown in figure 1–10.

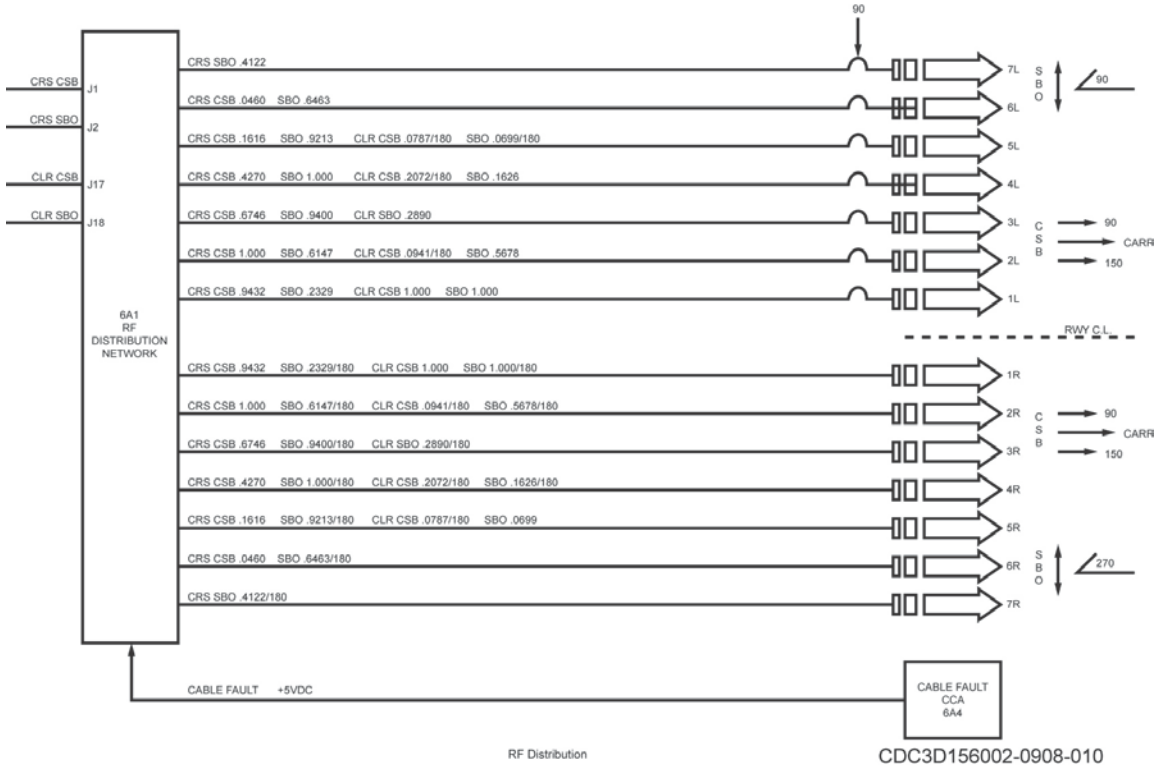

Figure 1–10. RF distribution.

Antenna system

The localizer antenna array is made up of 14 LPD antennas. It is used to radiate both CRS and CLR signals; whereas, older ILS systems use two separate arrays. The antenna array has a gain of about 10 decibels (dB) and directivity of about 28 dB. The chief advantage of an LPD antenna is its broad bandwidth. This characteristic allows for minimal environmental effects, such as ice buildup and temperature. To develop the required radiation patterns, the CRS signals require a large aperture (approximately 86 feet) to provide a directional radiation lobe. Also, to create the wide radiation pattern required for the CLR signals, a narrow aperture is necessary. Therefore, the CRS signals apply to outer antennas in the array, and the CLR signals apply simultaneously to the closer inner antenna pairs. This signal combination is accomplished in the distribution unit. Remember, setting up the proper phase relationship between the CSB and the SBO enables the desired space modulation, so

that the detected 90-Hz signal is predominant on the pilot's left side and the detected 150-Hz signal is predominant to the right.

Each antenna contains a sampling loop, which is where the signals used to monitor the radiated pattern are initiated. The sampling loop in the antenna feeds a small sample of the transmitted signal through the monitor feedlines to the RF combining network in the distribution unit.

Localizer antenna variations

For optimum flight safety, the localizer produces a narrow pattern in space concentrated near the runway using a course transmitter. It is capable of generating a course width of approximately 3.5º. A clearance transmitter simultaneously generates a broad pattern that affects the aircraft receiver in areas from approximately 10° to 90°. The primary purpose of the clearance transmitter is to mask nulls formed by additional lobes of the course transmitter output. The signals radiate from 14 LPD antennas.

The CE localizer concept with course and CLR transmitters and 14 antennas is not always required in order to meet minimum standards for a safe approach by aircraft. If the forward terrain in the coverage area of the localizer is free from major structures and terrain problems, a simpler single frequency system will suffice.

Single frequency localizer using 8 antennas

In this configuration, only the course transmitter is installed. The course CSB and SBO signals are fed to the 8 antennas as 4 pairs. The phasing between antennas of each pair for CSB (in-phase between antennas of each pair), and SBO (180° out of phase between antennas of each pair), is the same as you learned earlier. The a-spacing between antennas of each of the 4 pairs is tailored differently, and the relative power levels of the signals fed to each pair is fine-tuned more than in the dual-frequency system. The pair-to-pair antenna phasing is also tailored. This results in the system producing a slightly broader-than-normal pattern with course width being approximately 5° wide. This configuration provides fly-left and fly-right indications of at least .200 DDM from the course width points out to 40° either side of centerline. Because of the antenna a-spacing, nulls in the pattern are eliminated within the area of coverage.

Single frequency localizer using 14 antennas

Only a course transmitter with a standard 14-antenna array is used in this configuration. Again, because of careful selection of antenna pair a-spacing, antenna pair power level settings, and pair-to-pair antenna phasing, this system produces only a slightly broader-than-normal pattern. Course width is approximately 4.5°, and DDM values of at least .200 are measured outside of the course width points, to a minimum of ±40° from centerline. No nulls exist in the area of coverage for this system.

Cable fault

A 5 VDC level is applied to the distribution network to provide a small current through all feed paths to the antenna, then to the antenna cable fault assembly in the distribution unit. This causes a 600-Hz signal to be generated and sent to both course monitors. If any antenna cable is broken or shorted, the current path is opened and the 600-Hz signal ceases, initiating an alarm in the monitors. This initiates a station shutdown.

Radio frequency combining network and radio frequency detector unit

Here, we will look at the method by which the localizer monitors receive signals representing course and clearance centerline and width. The assemblies that provide this information to the monitors do a fairly good job of allowing the monitors to accurately measure the transmitter output and keep the system from transmitting unsafe information to in-bound pilots.

Dual-frequency radio frequency detector unit

A dual-frequency (course and clearance transmitter) has an RDU installed in the shelter. Coaxial cabling is used to bring two sets of signals (CSB and SBO) from the distribution unit to the RDU. Refer to figure 1–11 during the following discussion.

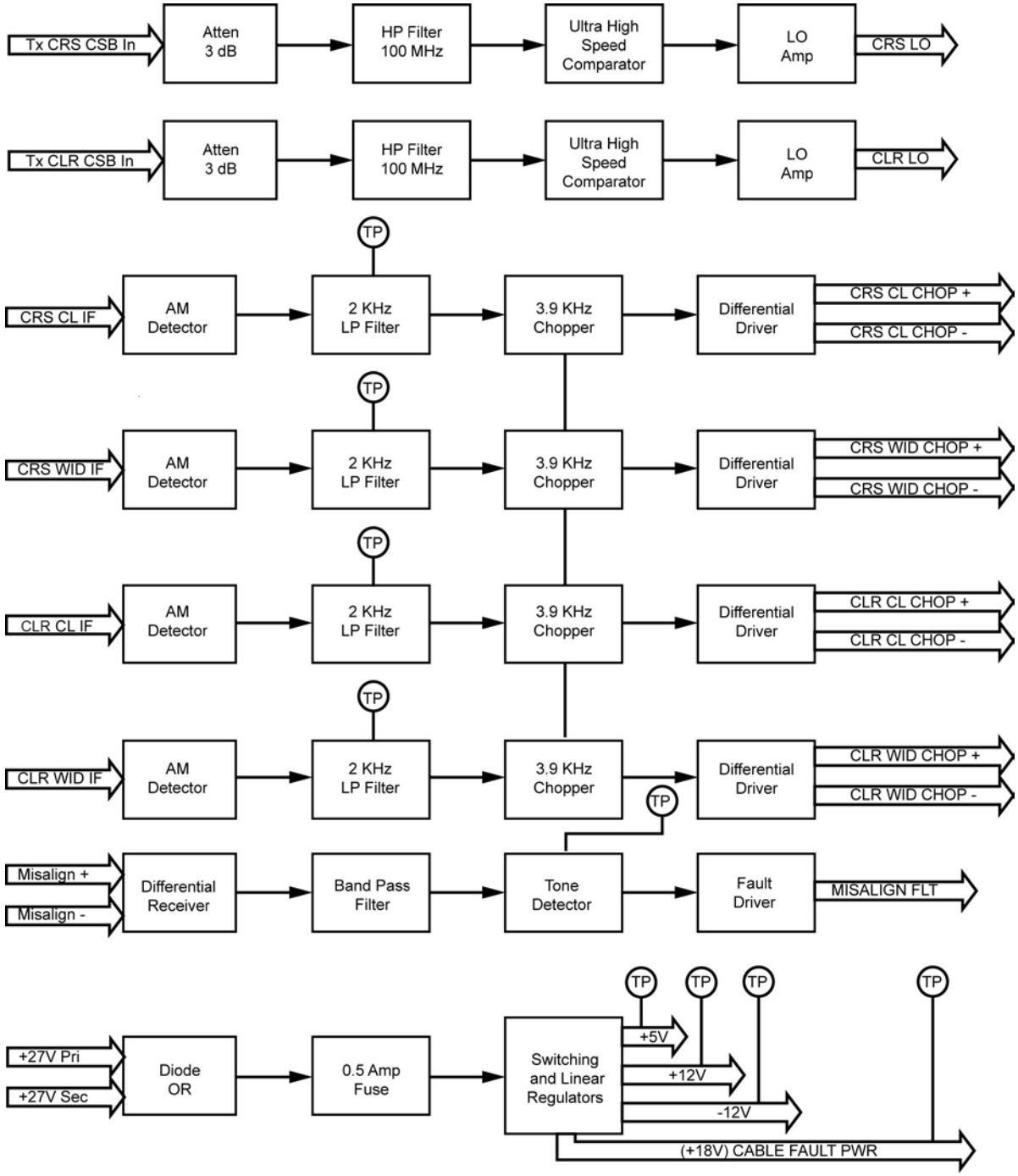

Figure 1–11. Localizer dual-frequency RDU transmit signal block diagram.

Samples of CSB from the course transmitter and clearance transmitter are taken from sampling points in the interlock subassembly before being applied to the antennas. The two signals reach the RDU at the point marked Tx CRS CSB in and Tx CLR CSB in. The signals are attenuated and the audio modulation is removed by passing them through a 100-MHz high-pass filter network and then into an

ultra-high speed comparator. The result is unmodulated samples of course and clearance CSB, designated as CRS local oscillator (LO) and CLR LO. These outputs are used as LO frequencies for the RDU.

The RDU uses the heterodyning principle to down-convert the carrier frequencies before they are combined and adjusted to become monitor input signals. The RDU mixes the CRS LO frequency with samples of CLR CSB and CLR SBO, and mixes the CLR LO frequency with samples of CRS CSB and CRS SBO. Mixing the signals produces the two original inputs, the sum frequency, and the difference frequency. Since the difference between the course and clearance carrier frequency is nominally 9.5 kHz, this difference can be used as an intermediate frequency for further processing prior to monitoring.

Samples of CRS and CLR CSB and CRS and CLR SBO from the antenna sampling probes are sent to the RDU. They are designated as monitored (Mon) CSB in and Mon SBO in on figure 1–12. Since the CRS and CLR channels of the RDU operate identically, we discuss only the course channel. The CSB signal is split with a power divider and one-half is applied to an adjustable phase shifter and fixed attenuators. The phase shifter allows the phase of the CSB to be adjusted relative to the SBO signal to make sure that the centerline and width inputs to the monitors accurately represent the transmitted signal. A set of –20 dB taps allows you to connect a portable instrument landing system receiver (PIR) at important points in the RDU during troubleshooting. The CRS and CLR CSB enter a mixer circuit and 100 MHz low pass filter next. The CLR LO signal we previously discussed is applied through another –20 dB tap and to a power divider. One-half of the signal is then sent as a second input to the mixer circuit. The mixer cancels out the like frequencies, in this case the CLR signals at the two mixer inputs while providing the course-to-clearance difference frequency (9.5 kHz) as one of the outputs. The mixer output is the difference frequency, and its characteristics (amplitude, modulation, and phase) vary proportionally with the CRS CSB transmitter output. This output is applied to two circuits: the adjustable gain amplifier and a summing network. The adjustable gain amplifier output should have a DDM value of 0.000 and represent the course transmitter CL. The output is labeled CRS CL IF.

The CRS and CLR SBO monitored (Mon) SBO in are applied to a power divider and one-half of the signal is applied to the course channel through circuits identical to those we just discussed. The only difference is that the CRS SBO and CLR LO frequency are providing a 9.5 kHz difference frequency, or intermediate frequency, representing the CRS SBO signal. The CRS SBO intermediate frequency is applied to the summing network and to an adjustable gain amplifier. The output of the summing network is comprised of CRS CSB IF and CRS SBO IF. The audio modulation and relative power levels represent those sent to the antennas. The phase relationship and amplitude may be adjusted by the phase shifters and adjustable gain amplifiers so that the monitors receive 90 Hz, 150 Hz, and 1,020 Hz with the same DDM values and modulation percentages as would be found at the localizer width point. On figure 1–12, the adjustable gain amplifier width output is marked as CRS WID IF, and should have a DDM value of 0.155 DDM, with 150 Hz predominating.

The same circuits are used in the CLR channel. They perform the exact same functions as we discussed above. The only difference is that the CRS LO input to these circuits causes cancellation of the CRS CSB and CRS SBO in the CLR channel. The output labeled CLR CL IF represents the CL indication from the CLR radiation pattern. The CLR WID IF represents the width indication caused by the CLR radiation pattern. These outputs should indicate 0.000 DDM and 0.155 DDM, respectively.

Looking at figure 1–11, all four IF outputs are sent to an AM detector, low-pass filter, a 3.9 kHz chopper circuit, and a differential driver. These circuits convert the 9.5 kHz IF inputs to the 3.9 kHz AM input required by the monitors. The CRS CL CHOP ±, CRS WID CHOP ±, CLR CL CHOP ±, and CLR WID CHOP ± are sent to the CRS monitors and CLR monitors, respectively. The monitors use these inputs to measure CRS and CLR transmitter CL DDM, and DDM at the 150 Hz half-width point, 90- and 150-Hz modulation, ID % OF MOD, and carrier power.

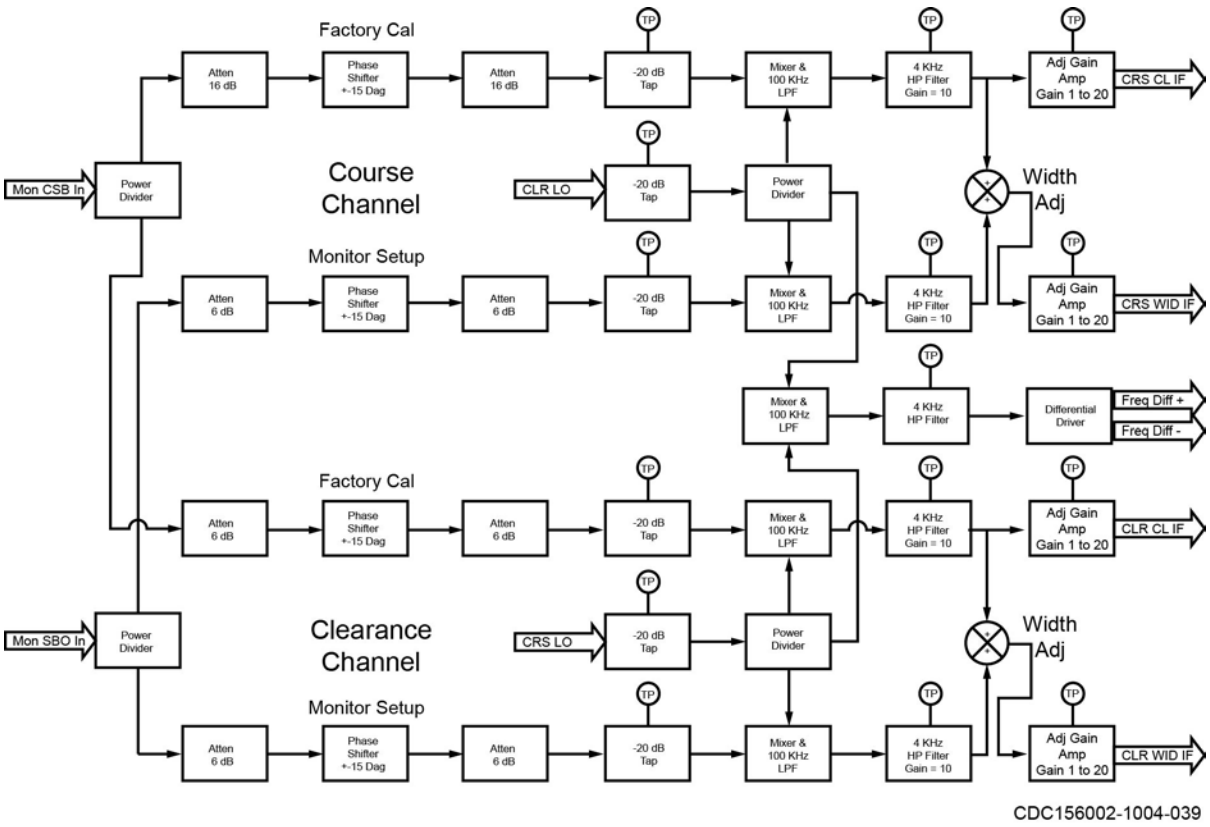

Figure 1–12. Localizer dual-frequency RDU monitor signal block diagram.

In the RDU, one set of circuits receives samples of CRS LO and CLR LO from their respective power dividers. These two LO inputs are mixed and the audio modulation is filtered out with a high-pass filter. The difference frequency between the CRS LO and CLR LO is the difference between the course and clearance transmitter RF outputs (normally 9.5 kHz). On the block diagram, this output is designated as Freq Diff ±, and is sent directly to the CLR monitors for measurement of frequency separation.

Single frequency radio frequency detector unit

A single-frequency localizer (CRS transmitter only) also uses an RDU to convert monitored antenna samples into the 3.9 kHz subcarrier required by the monitors. The primary difference between the dual-frequency RDU and single-frequency RDU is that there is no CLR transmitter available to assist in producing the IF. A single frequency RDU could be used when the forward terrain is free of major obstructions. Refer to figure 1–13 during the following discussion.

The Mon samples of CSB and SBO are sent from the RF combining network and are applied to the RDU as Mon CSB in and Mon SBO in. Both inputs are fed to attenuators and then to variable phase shifters where the relative phase relationship between the CSB and SBO can be adjusted. Both signals are applied as one input to separate mixers through a power divider. In the single frequency RDU, the LO frequency is produced by an on-board frequency synthesizer. The synthesizer's output frequency can be set using the dual in-line processor (DIP) switch settings. The synthesizer's output mimics the CLR transmitter RF output frequency at the channel selected by the DIP switches. This LO frequency is held stable by a phase-locked loop and voltage-controlled oscillator in the RDU. The resultant signal applied from the final amplifier on the block diagram, to the power divider, is a frequency that is close to the CRS transmitter's output frequency. The resultant IF output from both mixer circuits is the difference between the synthesizer output, and the CRS transmitter output frequency. Thus, the

CRS transmitter's output is converted down to a much lower frequency for the next stage of detection.

The signals contain the modulation and phase characteristics from the CRS transmitter output. The signal from the upper mixer on the figure, representing CRS CSB, is applied to a summing network. It is combined with the signal from the lower mixer, representing CRS SBO. The summing network output is adjustable and is designated as WID IF; it represents the width point of the localizer output. It should contain a DDM value of 0.155. The signal from the top mixer is also applied to the next series of circuits as CL IF. This signal represents the radiated CL of the localizer and should be at 0.000 DDM.

Each of the AM detectors, in both output paths detect the CRS transmitter audio signal, then converts this signal to a DC level, and applies the voltage to the 3.9 kHz chopper circuits. The chopper circuits produce the required 3.9 kHz AM signal that the monitors use to measure the CRS transmitter parameters. The signals to the monitors are designated as CL CHOP ± and WID CHOP ±.

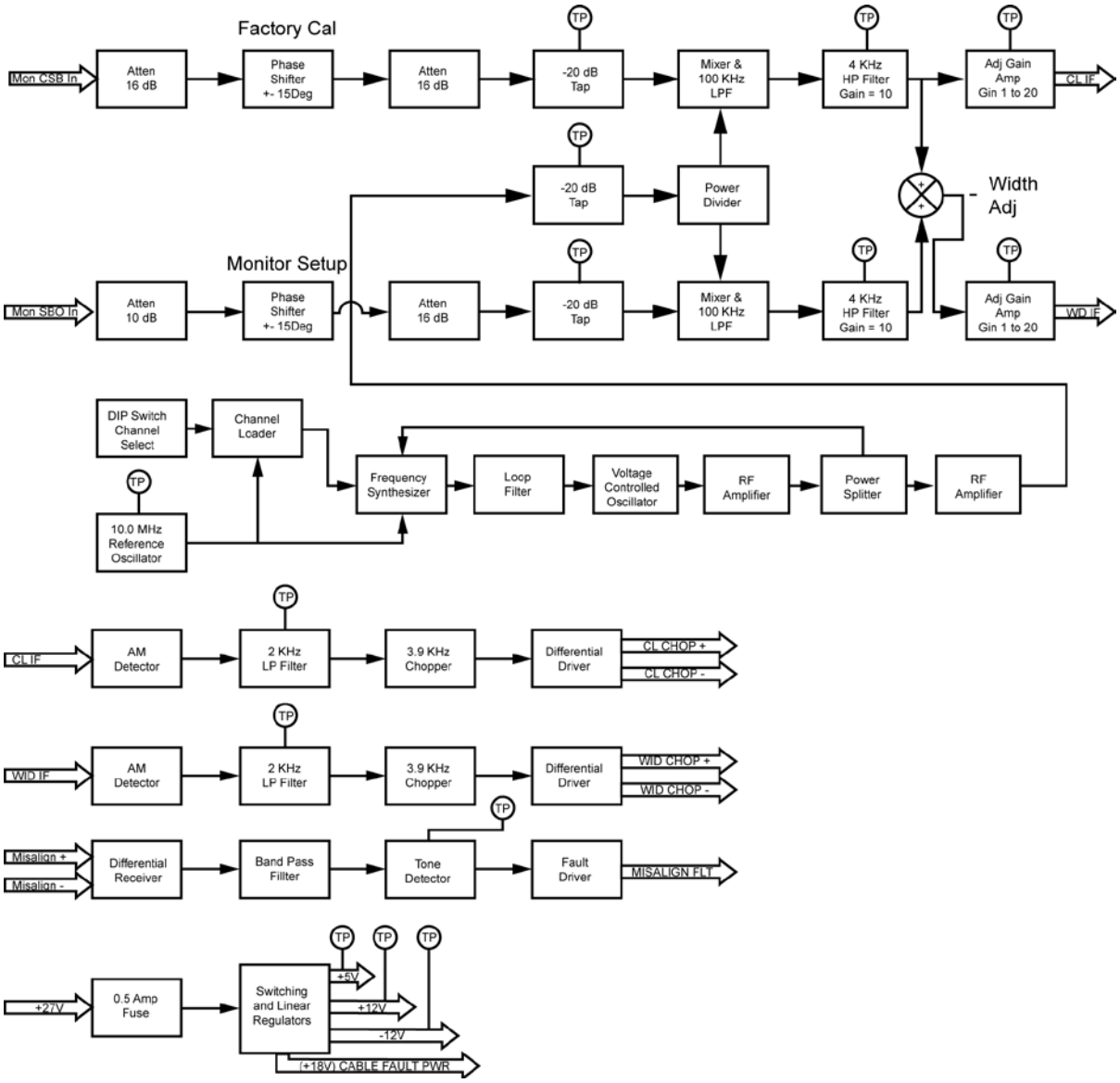

Figure 1–13. Localizer single frequency RDU block diagram.

Signal monitoring

When the signals get to the antennas, they are radiated, and aircraft use them for guidance. If, for whatever reason, the signals changed and resulted in unsafe or unreliable information being transmitted, the results could be tragic. Detecting and monitoring various parameters of the radiated signals is one way to ensure unsafe conditions do not develop. As you study this lesson, relate the parameters being checked, how they are checked, and how they were generated and distributed. This gives you a better idea of where to look if a malfunction occurs.

The localizer monitoring system consists of two separate monitor units—CRS monitors and CLR monitors. Both sets of monitors energize panel-mounted lamps to indicate the presence of an out-of-tolerance condition in any of the monitored parameters of the localizer system. They also have digital readouts of the current, upper, and lower alarm limits for each measured parameter. The CRS monitor measures the following five parameters of the localizer course RF signal. All measurements are made in a fixed sequence of programmed measurement routines.

1. 90- and 150-Hz percent modulation.
2. ID % OF MOD.
3. CRS DDM.
4. Width DDM.
5. RF level.

The monitor also has a test DDM measurement outside the other measurement routines with DDM simulated by fixed REF voltages. In addition, the CRS monitor activates an alarm if there is a break or short circuit in any of the antenna cables (feed lines). Before we begin our discussion of the various circuit cards within the CRS monitor, it is important to note that some cards within the CRS monitor can also be used in the CLR monitor and the glide slope. The following cards are interchangeable between the monitors (within the same slots) as long as they are aligned to meet the requirements of the monitor where they are used:

- Course signal processor assembly (A1).
- Width signal processor assembly (A2).
- Measurement assembly (A5).
- Timing assembly (A4).
- Alarm assembly (A6).
- Digital readout (A7).

Although pin connections and routing of signals may be different on the schematics, the actual circuit cards are the same. The ID assembly (A3) in the localizer can be used in either the CRS or CLR monitor but not in the glide slope. In the glide slope, the A3 card is called the near field path signal processor and its operation is the same as the A1 and A2 cards.

Signal processor assemblies (A1 and A2)

The signal processing functions of the CRS monitors are performed by the CRS and width channel signal processor assemblies. These signal processor assemblies produce DC voltage analogs of the modulation and carrier levels of the 90- and 150-Hz components of the composite detected signals received from the CRS and width integral detectors in the antenna distribution unit.

The CRS channel signal processor sends two signals in phase opposition (+mod and –mod) to the timing assembly for use in zero crossing and peak detection to develop the sampling gate controls. DC voltage analogs of the 90- and 150-Hz modulation components of the composite signal, plus a DC voltage analog of the carrier level, are routed from each signal processor assembly to the measurement assembly. In addition, the CRS channel signal processor assembly supplies an ID signal to the ID assembly.

The signal processors also provide an offset control used to compensate for circuit differences after verifying that the transmitter is operating correctly. For example, if the width DDM reading shows 0.159, yet all transmitter measurements, to include flight check, confirm normal operation and a width DDM of 0.155, then the width DDM offset would be adjusted until the monitor indicated 0.155 DDM. This is convenient for setting up the TO specified alarm tolerances. There is no offset for the percent of modulation parameter; therefore, the specified tolerances (±) are established (in accordance with the TO) by the digital readout in spite of the fact that actual tests reveal different values.

WARNING: The monitor-offset control can be a very dangerous control. NEVER adjust this control without first having thoroughly verified system integrity. An improper adjustment could result in your system becoming very dangerous to aircraft operation. If you are not sure of what you are doing before you make this adjustment, call someone who is experienced in this area.

Identification assembly (A3)

The composite ID signal received by the ID assembly from the CRS channel signal processor assembly is used to develop the ID % OF MOD DC voltage analog of the ID peak amplitude. The ID assembly also contains circuits that generate an alarm if the ID % OF MOD is too low, the ID signal is lost (no ID), or if the ID is not keyed (continuous ID).

Timing assembly (A4)

Most of the CRS monitors timing functions are generated by the timing assembly. This assembly provides a 460.8 kHz clock pulse to the measurement assembly and uses the +mod and –mod inputs from the CRS channel signal processor assembly to produce sampling gates. These gates are applied to the signal processor assemblies, which allow the accurate measurement of 90- and 150-Hz percent of modulation and the re-creation of the half-width DDM measurement.

Measurement assembly (A5)

The measurement assembly receives input signals from the ID, digital readout, alarm assemblies, a 460.8 kHz clock from the timing assembly, and upper/lower alarm limit inputs from the alarm/test switch. The measurement assembly inputs are DC analog voltages, which are ultimately converted to digital forms and applied to the alarm and digital readout assemblies.

All digital circuits in the measurement assembly are clocked by a master oscillator located in the timing assembly. A program counter in the measurement assembly sequences through all the monitor’s parameter checks in a predetermined sequence. The check of one parameter within the program (i.e., width DDM) is referred to as a routine. Each routine is divided into subroutines (A, B, and C). Subroutines A and B are setup subroutines, while completion of subroutine C determines the result of the checked parameter. At the end of each measurement routine (which is the end of subroutine C), the measurement assembly generates a strobe pulse that is sent to the alarm assembly for comparison to the alarm limits and display. It ultimately steps the monitor to the next measurement routine in the sequence.

The subroutines compare the DC voltages input from the signal processor. Generally, three voltages (90, 150 Hz, and carrier level) are compared in subroutines A, B, and C. If only two signals are compared, subroutine A is skipped. Both subroutines A and B last for 1,000 counts. One reason for using 1,000 counts is the parameters measure percentages; thus, with 1,000 counts, you can display 100.0. Each subroutine starts at an established 0 level (baseline). The DC voltages of subroutines A (if used) and B result in a specific DC level at the end of subroutine B. This level may be either above, below, or at the 0 baseline. The DC level at the beginning of subroutine C determines the number of counts required for the level to return to the 0 baseline.

The strobe, which occurs at the end of subroutine C, not only steps the measurement assembly into the next routine but is also used in the alarm assembly to determine if the number of counts in

subroutine C is within the established tolerance. The strobe is used by the digital readout assembly to display the count at that last instant in subroutine C. After the last measurement routine of the program, the program counter of the measurement assembly is reset.

Digital readout assembly (A7)

The digital readout assembly displays the measured parameters as selected by the front panel display selector switch. Readout of information is controlled by the following four signals:

1. Display strobe.
2. The display clock.
3. Overrange output from the alarm assembly.
4. Display counter reset pulses from the measurement assembly.

If the parameter selected for display requires a decimal point, placement of the decimal point in the display is determined by the DP2 and DP4 lines from the front panel display selector switch. A display counter in the digital readout assembly, clocked from the measurement assembly, begins counting at the start of each subroutine of the measurement assembly. The display strobe occurs simultaneously with the strobe from the measurement assembly and causes the digital readout assembly light emitting diodes (LED) to display the count of the display counter when the strobe pulse occurs.

NOTE: This occurs as long as the display selector switch is set for the particular parameter you want to view.

After the strobe pulse, a display counter reset pulse from the measurement assembly resets the digital readout assembly displays and the program counter steps to the next measurement routine. This starts the whole process over again.

When the display counter reaches its maximum capacity of 999 counts, the next clock input causes a carry pulse to be output from the digital readout assembly. The carry pulse is processed in the measurement assembly, where it is also used to indicate the end of subroutines A and B (remember, these subroutines last 1,000 counts). The measurement assembly then inverts the carry pulse and sends it to the alarm assembly. If the monitor is in subroutine C and the carry pulse, which represents the one-thousandth count is input, the alarm assembly generates the overrange signal. The overrange signal enables the digit 1 of over range display DS1, thus displaying 1,000.

Alarm assembly (A6)

All alarm limits for the monitor are set on the alarm assembly. An alarm signal is sent to the control unit if any alarm limit is exceeded. When an alarm limit is exceeded, the alarm assembly lights the front panel lamp for the parameter that is out of tolerance. The predominant frequency of a DDM measurement is determined in the measurement assembly, but the resulting voltage level is processed in the alarm assembly to light either the 90- or 150-Hz predominant frequency lamp on the front panel. Program counter outputs from the measurement assembly select preset alarm limits for each routine of the measurement program; these limits can be viewed on the displays. The alarm assembly, as we stated earlier, generates the display strobe, which ultimately causes a digital readout for the routine selected by the front panel selector switch.

Antenna cable fault assembly (A8)

Antenna cable fault monitoring is outside the measurement program. If a break or short circuit occurs in any of the antenna cables (feed lines), the 600-Hz signal is no longer applied to the antenna cable fault assembly. The antenna cable fault assembly then sends a DC signal to light the front panel antenna fault alarm lamp and causes the alarm assembly to send a fault alarm to the control unit. The antenna cable fault assembly is only located in the LOC CRS monitor.

Clearance monitors

The CLR monitors measure six parameters of the CLR RF signal. All measurements are made in a fixed sequence of programmed measurement routines, the same as was done in the CRS monitor. The only difference is the addition of the measurement of the CLR frequency.

Common cards

The CLR monitor uses exactly the same cards as the CRS monitor, with the exception of the A8 card, which is the localizer clearance assembly. Remember, although pin connections and routing of signals may be different on the schematics, the actual circuit cards are the same.

Clearance assembly

This assembly processes the signal from the localizer clearance detector for the measurement of CLR and CRS frequency difference, which is 9.5 kHz. As you may recall, the CRS carrier frequency is 4.75 kHz above the SAF and the CLR carrier frequency is 4.75 kHz below the SAF. The clearance input signal from the clearance detector is the frequency difference of the CRS and CLR RF signals, normally 9.5 kHz. The clearance assembly sends a DC output voltage, which is directly proportional to the frequency difference to the measurement assembly of the CLR monitor. If the frequency difference increases, the output voltage increases. If the frequency difference is out of tolerance, the clearance assembly signals the alarm assembly to activate an alarm and light the FREQ SEP ALARM lamp on the CLR monitor.

Signal radiation and ground check

Previously, we discussed the signals the localizer generates and how they are received and fed back to the monitors. Now, we will tie everything together by taking a look at how the signals combine together in space to provide meaningful signals to the aircraft receivers. To begin, we will provide an explanation of DDM.

Difference in depth of modulation

DDM stands for difference in depth of modulation. It is the percent of modulation difference expressed as a decimal. To convert the percent of modulation difference to DDM, move the decimal point two places to the left. For example, a difference of 0.0 percent is expressed as .000 DDM and 15.5 percent is expressed as .155 DDM.

As discussed earlier, the localizer output consists of both CSB and SBO signals. The CSB signal is modulated by 90 Hz at 20 percent and by 150 Hz at 20 percent. The 90 and 150 Hz in the CSB are in phase (+90, +150). The SBO signal is also modulated by 90 Hz and 150 Hz at 100 percent per tone. The 90 and 150 in the SBO are 180º out of phase (+90, –150). Looking at the CSB by itself, we see the 90 and 150 are both modulated at 20 percent. For the CSB signal only the difference between the 90 Hz modulation (20 percent) and the 150 Hz modulation (20 percent) would be 0. When the SBO signal is added to the CSB signal (space modulation), the 90 and 150 in the SBO will imbalance the CSB due to the 90 and 150 in the SBO being 180º out of phase. This causes the resultant 90 and 150 Hz signals to be unequal, yielding a DDM value that is not .000 DDM. In other words, one tone will be larger than the other.

The following formula is used for calculating DDM:

$$\mathrm{DDM} = 2\mathrm{M}\frac{\mathrm{Ess}}{\mathrm{Ecs}}\mathrm{COS}\,0$$

The elements in the above formula are defined in the following list:

- M = modulation
- Ess/Ecs = amplitudes of the sidebands and carrier
- COS 0 = sideband and carrier phasing

Further analysis of the space modulation effect on DDM reveals the following:

- Both the 90 and 150 Hz modulate the CSB carrier at 20 percent. If the modulation of the 90 and 150 Hz were added, you would get 40 percent. This is called sum of depth of modulation (SDM).
- For the purpose of ILS discussions, only signals of the same frequency will add together. Harmonics generated by signals of different frequencies adding together are blocked by the ILS receivers.
- The 90 and 150 Hz in the SBO are also equal, even though they are 180º out of phase. While the 90 from the SBO is adding to the 90 from the CSB (20 percent), the 150 Hz in the SBO is subtracting the same amount from the CSB 150 Hz (20 percent).
- The sum of the 90 Hz resultant and the 150 Hz resultant should always total 40 percent.

The example below depicts the .155 DDM normal reading at the 90 Hz side of centerline half-width ground checkpoint and is a result of the combining of the CSB and SBO signals.

- 90 Hz resultant = 27.75%
- 150 Hz resultant = 12.25%
- Difference = 15.5%
- DDM = .155
- SDM = 40%

Now that you have a basic understanding of how the radiating signals relate to DDM, we will examine your responsibilities for ground checking the localizer.

Ground checks

As a radar, airfield & weather systems (RAWS) technician, you are required to periodically monitor the radiating pattern by physically ground checking the system using a PIR. Ground checking the localizer's radiating pattern confirms what the aircraft will see in the air. To do this, you will walk the PIR in front of the localizer and record DDM readings found at various surveyed checkpoints within the radiation pattern. There are different types of ground checks. The localizer has three, which are the near field, the far field, and the ground phasing check. A standard ground check is performed in the near field. Make sure the ILS transmitters are at facility REFs before performing a ground check.

Localizer ground checks can be performed in two different locations. The first is the near field arc, which is located approximately 1,000 feet from the antenna array. You need to be at least 1,000 feet away in order to obtain valid readings without the effects of proximity phase error (space modulation is not as pronounced when very close to the antennas). The near field arc consists of checkpoints from 35º on one side of centerline to 35º on the other side. The second set of checkpoints are located in the far field or around the area of the runway threshold. The far field arc consists of checkpoints from 5º to 5º penetrating the centerline. The far field is the most accurate reading because it gives a better composite of the course radiation pattern, where the actual needle movement on a receiver occurs. The clearance radiation pattern is checked in the near field. Once you obtain the DDM readings, they should be compared to the DDM readings (REF data) collected after the flight check. Your job is to make sure there are no major changes to the radiated signal.

Another type of ground check is called ground phasing. This check is done to verify the phase between the CSB and SBO. If this ground check indicates an incorrect phasing relationship, you would need to accomplish a phasing adjustment. Other ground checks will be performed to verify the accuracy of the monitors. This is done by placing the transmitters into alarm and then checking the radiation pattern. Now, take a detailed look at the course only, clearance only, and composite ground checks.

Course only ground check

The equipment configuration for this discussion is the course CSB and SBO radiating normally and the clearance CSB and SBO dummy loaded. Using a PIR, we took ground readings from 35° to 35º either side of CL, and recorded and plotted them on graph paper; the results appear as in figure 1–14. Remember, the CRS RF radiation pattern was a narrow lobe with maximum on the centerline.

Analyzing the course DDM pattern, we see a .000 DDM reading on CL. As we proceed laterally from CL, the DDM value increases until we reach max DDM at approximately 4° to 6º. As we continue, the DDM value drops until we again see .000 DDM at approximately 11° to 14º. The excursion below the baseline indicates reverse sensing (150 Hz predominant on the 90 side and vice-versa). Reverse sensing is seen from approximately 12° to 28º. Normal sensing is seen again from 28° to 35º. This effect is due to antenna configuration that is used to obtain the CRS pattern (a long, narrow lobe), which generates smaller side lobes that are 180° out of phase with the main lobes. For this exact reason, we use a capture-effect localizer with CLR transmitters to cover up this area.

To properly analyze the DDM ground check, we must understand the operation of the aircraft receiver. The aircraft receiver, as viewed by the pilot, consists of the cross pointer and the flag indicator. The cross pointer deflects upon values received by the indicator. The flag movement is dependent upon modulation levels and RF signal strength. When the flag is visible, pilots know the levels or strength are not sufficient for valid readings and should not be used.

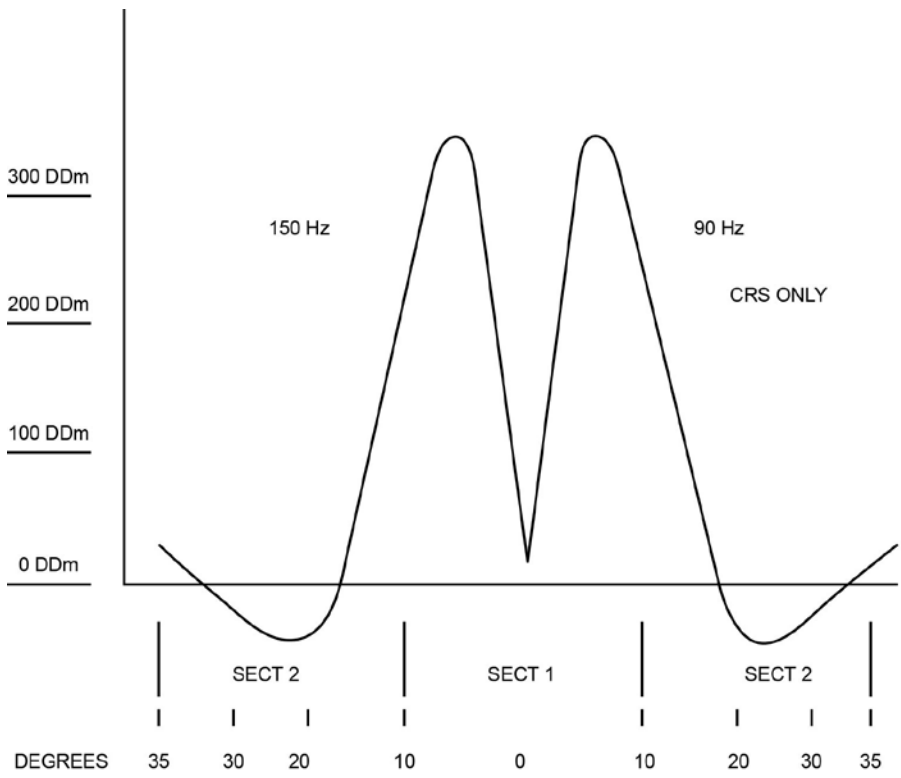

Figure 1–14. Course only ground check graph.

The aircraft receiver indicator is similar to that shown in figure 1–15. When a .000 DDM value is received, the indicator needle will center (indicating on course). When a value other than .000 DDM is received, the needle will deflect to the left or right depending on which tone is prominent. If the needle is deflected to the right of center, this indicates a predominant 90-Hz signal is being received and the pilot should fly to the right or toward the needle. The greater the difference between the tones DDM, the more the needle will deflect. End stops are set for .155 DDM. Any value greater than .155 DDM will cause the meter to remain pegged and values less than .155 will yield an “on scale” indication. Keep in mind, the only place we desire an on-scale indication is on CL and out to

approximately 1° to 3° to either side. Providing full-scale deflection in all other areas is termed as providing “adequate clearances.” Measurement of clearance ensures adequate fly left or fly right in all areas outside the approach course.

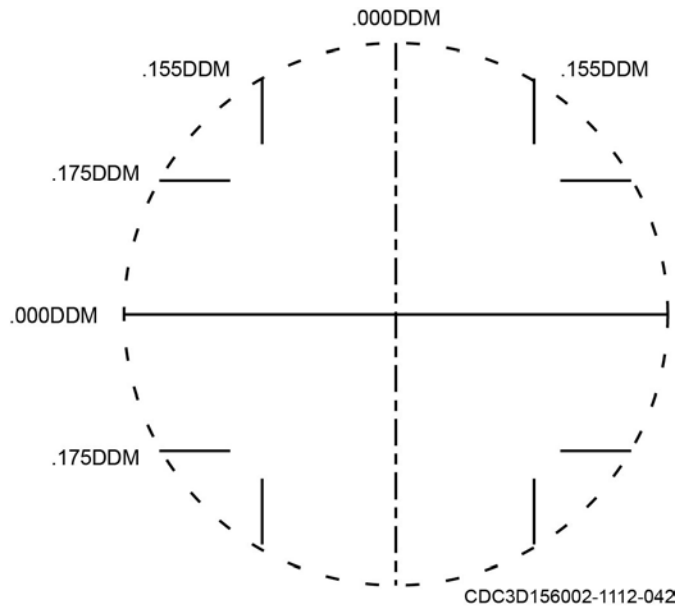

Figure 1–15. Aircraft receiver indicator.

Clearance only ground check

Now with the CRS, CSB, and SBO dummy loaded and the CLR, CSB, and SBO radiating, we examine the CLR only radiated signals. As opposed to the CRS radiation pattern, the CLR transmitter outputs are fed to the antenna array to produce a very broad radiation lobe as shown in figure 1–16.

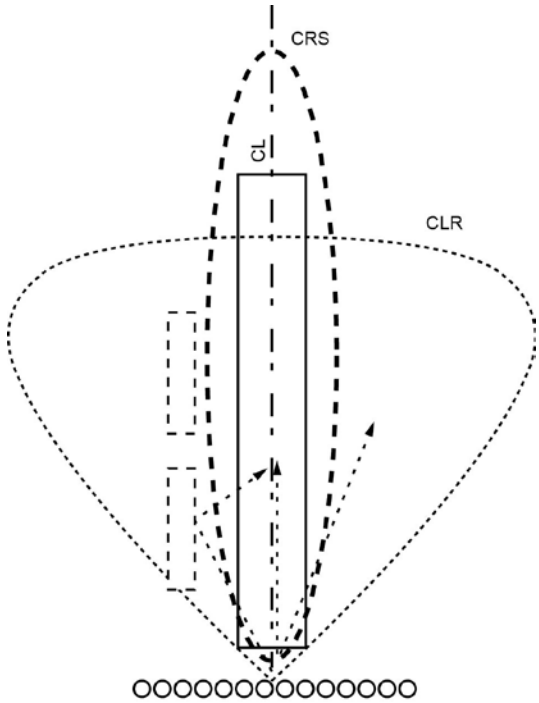

Figure 1–16. Course vs. clearance radiation lobes.

Repeating the 35º to 35º either side of CL ground check with the CLR only outputs, the resultant graph looks like figure 1–17. The reading on CL is .000 DDM indicating on course; however, due to reflections generated by the wide CLR RF radiation lobe, the CL for CLR only can be very rough. Sector 1, has a linear increase to .180 DDM and is greater than .180 out to 10º. The greater than .155 DDM is maintained throughout Sector 2 (10° to 35°). The CLR width would still be measured from .155 DDM on one side of CL to .155 on the other side.

Composite ground check

Since the GRN–30 localizer radiates both CRS and CLR signals, it is classified as a "CE" localizer. In the CE principle, the receiver is captured by or responds only to the stronger of the two RF signals within the receiver's bandwidth. In other words, the receiver will only demodulate or detect the stronger signal and will reject the weaker one. The keyword in the CE principle is RF signal strength, not DDM value. This principle applies to both the aircraft ILS receiver and the PIR. Recall from an earlier discussion the CRS transmitter output is 4.75 kHz above station assigned frequency and the CLR transmitter is 4.75 kHz below. This provides a 9.5 kHz frequency separation, which prevents the two signals from combining.

To understand how the composite (both CRS and CLR) radiation pattern is formed, we must analyze the RF signal strength plots for both, refer to figure 1–18. Notice the CRS signal is stronger than the CLR on CL. The ratio between the CRS and CLR signal strength measured on CL is called the "capture ratio." The CRS is normally from 12.5 to 16 dB higher than the CLR. To meet tolerances, the CRS must be at least 10 dB above the CLR on CL. Additionally, both the CRS and CLR signal strengths decrease as you move away from CL, but the CRS decreases at a much faster rate.

Figure 1–19 combines the CRS and CLR RF plots highlighting the CRS narrowness as compared to the CLR. At approximately 8° to 10° the CRS and CLR are equal in strength. The points where this condition exists are called "capture points." Between capture points (8° to 8° either side of CL), the CRS will be stronger than the CLR and the CRS will capture the receiver. From capture points out to 35°, the CLR will be stronger and will capture the receiver.

The RF plots in figure 1–19 are for CSB only. The SBO signal strengths are so small (below 400 milliwatts each) that they have very little impact on the resultant RF plots or CE properties of the receiver. Keep in mind the capture ratio and location of the capture points will remain constant as long as the CSB power outputs of the transmitters are maintained at 15 W CRS and 10 W CLR. Now that you understand the CE principle and how the power levels relate, we will finish with a look at the DDM of the combined signal.

If you were to superimpose the CLR only ground check graph on top of the CRS only, we would have the results depicted by figure 1–20 "A." Remember the capture points are controlled by RF not DDM. By applying the CE principle, the resulting composite ground check would look like figure 1–20 "B." Remember from 8º to 8º either side of CL, the CRS would be stronger and capture the receiver. From 8° to 35°, the CLR will be stronger and capture the receiver. Analyzing sectors 1 and 2 confirms the composite pattern is in tolerance.

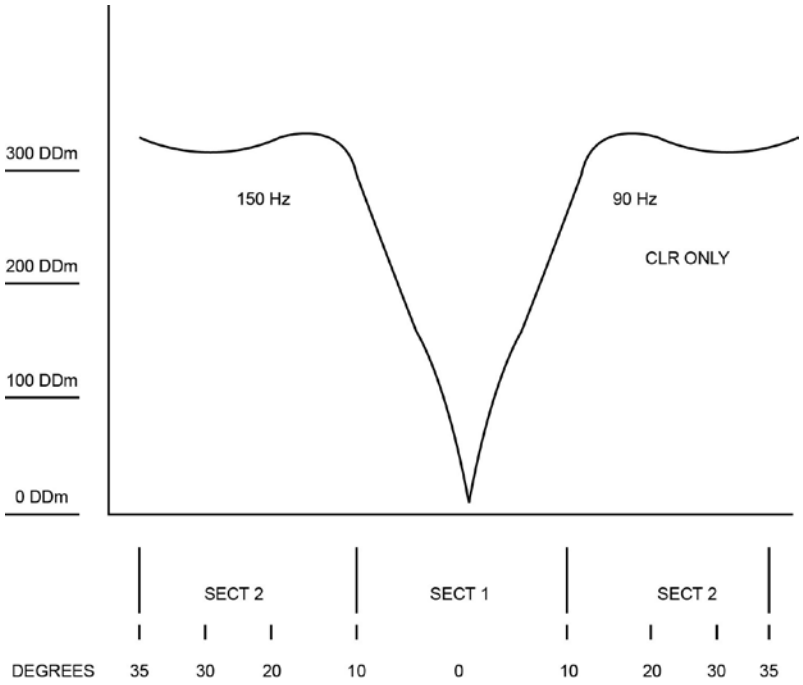

Figure 1–17. Clearance only ground check graph.

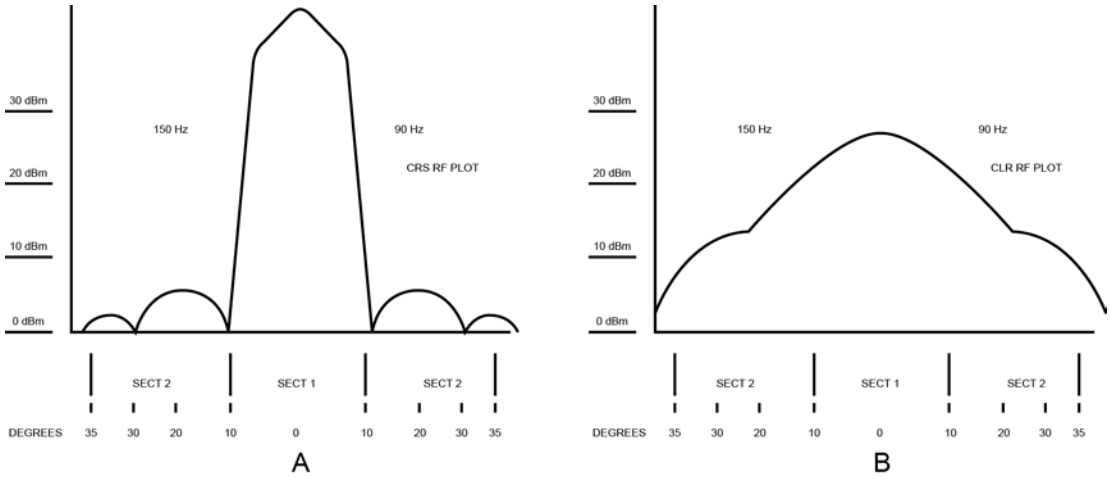

Figure 1–18. Course vs. clearance signal strength comparison.

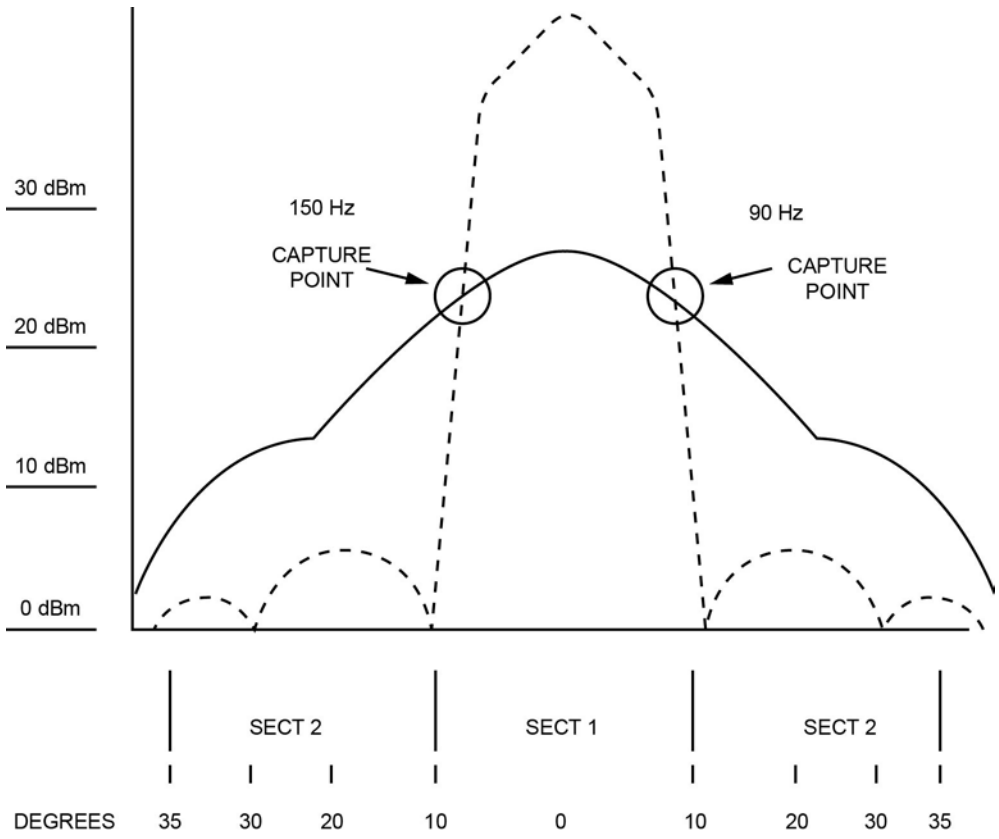

Figure 1–19. Combined CSB RF plots.

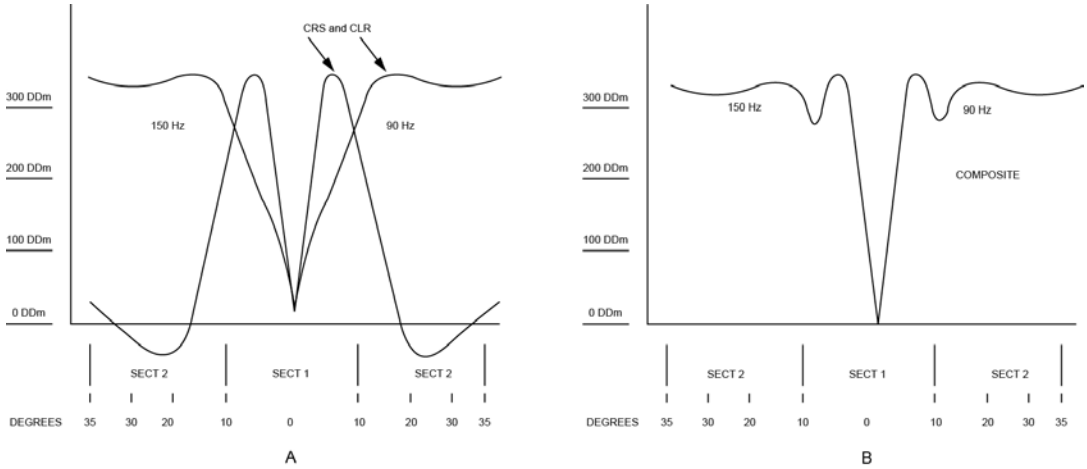

Figure 1–20. Composite ground check graph.

Self-Test Questions

After you complete these questions, you may check your answers at the end of the unit.

201. Functional description

1. What is the normal shelter offset distance from the center of the localizer antenna array?

2. What are the primary power requirements for the localizer?

3. How many log-periodic dipole antennas are used in the antenna array?

4. How are transmitting and monitoring signals routed to and from the antenna?

202. Capabilities and limitations

1. Within what frequency range is the localizer capable of operating?

2. What signals modulate the carrier of the localizer and at what depth of modulation?

3. What is used to prevent two localizer systems from being on at the same time and radiating at each other?

4. What output status tones does the control indicator produce?

5. If an alarm occurs in the localizer, what is the actual time delay from main transmitter shutdown to STDBY transmitter on?

6. Name the two types of localizer transmitters.

203. Block diagram and theory of operation

1. What are the three basic operations of the localizer station?

2. Describe the frequency of the CRS and CLR carrier in relation to the SAF.

3. The radiated signals of the localizer produce what kind of modulation?

4. What are the functions of the changeover unit?

5. Why do the course and clearance signals not combine in space?

6. Describe integral monitoring.

7. What localizer unit is responsible for monitoring the integrity of the antenna cables?

8. What localizer unit is responsible for control of the CLR transmitters?

9. Where is the detected signal in the antenna distribution unit sent?

10. What is the only localizer unit not tied into the control unit?

11. What are the normal CSB and SBO powers for the localizer?

12. What is the 1,020 Hz signal used for in the course transmitter?

13. What produces the RF frequency for the CRS transmitter?

14. What is the crystal-controlled oscillator frequency in the 90 and 150 Hz generator assembly?

15. What happens in the 90- and 150-Hz generator assembly if there is a phase difference in the 15-Hz signals?

16. What are the two functions of the diode-switching network?

17. What is the output of the 4A5 RF amplifier?

18. What is the nominal power setting of the clearance CSB and SBO?

19. What is the output frequency of the SFS assembly?

20. Name the two services the localizer changeover unit provides.

21. What is the purpose of the localizer antenna distribution unit?

22. What is the phase relationship of the course SBO to CSB at the input to the antennas?

23. What is the gain of the localizer antenna array?

24. What is the primary purpose of the clearance transmitter?

25. What happens to the localizer if any antenna cable is broken or shorted?

26. In the dual-frequency RDU, where are the samples of CSB from the course and clearance transmitter taken?

27. What is the primary difference between the dual-frequency RDU and the single frequency RDU?

28. Name the two separate monitor units that make up the localizer monitor system.

29. What monitor activates an alarm if there is a short in an antenna feedline?

30. What is the frequency of the clock pulse used by the course monitor timing assembly?

31. Where is the master oscillator that is used in the measurement assembly located?

32. Where are all alarm limits for the monitor set?

33. The antenna cable fault assembly is only located in what localizer assembly?

34. What assembly processes the signal from the localizer clearance detector?

35. Convert a 20 percent modulation difference into DDM.

36. Name the types of localizer ground checks.

37. Describe the location of the two ground check measurement areas.

38. Why are the localizer course and clearance transmitter's output frequencies separated by 9.5 kHz?

1–2. Null-Reference Glide Slope/Capture-Effect Glide Slope, AN/GRN–31

This section describes the functional description of the glide slope (GS) station and each of its major components. Also presented is a brief look at the technical characteristics of the GS. While you read through this section, mentally compare what you know of the localizer to what you are learning about the GS. You will find many similarities between the two systems.

204. Functional description

The GS station provides the final approach glide path information to landing aircraft. It along with a localizer station, marker beacon station, RCDU, and interlock control unit, collectively makeup the ILS.

Overview

To provide glide path information to the ILS, the NR GS station generates two RF signals: an RF carrier signal modulated at 90 and 150 Hz and a sideband only signal modulated by 90 and 150 Hz. These signals are transmitted by two antennas. In a CE configuration, an additional signal called CLR is also radiated to provide adequate fly-up indications below glide path. The signals are radiated from three antennas instead of two. The resulting signal pattern provides guidance in the vertical plane to approaching aircraft. The transmitted GS signal is sampled by probes mounted in the transmitting antennas and also by a near-field monitor detector. These sampled signals are detected by integral detectors and the near-field monitor detector antenna. The signals are then fed to two monitors, in parallel, for measurement and analysis. If both monitors determine that the GS equipment is malfunctioning, an alarm sounds at the RCDU and an alarm indication is given. When the main transmitter is radiating, this alarm initiates a transfer to the STDBY transmitter.

Glide slope shelter

The GS shelters are painted the same international orange and white as the localizer shelters although some bases have spent extra money to alter the paint to match their paint scheme. The shelter is constructed of fiberglass and steel. The shelter houses power switching, lighting, environmental controls, one or two equipment cabinets containing the ILS electronic equipment, and a workbench with electrical outlets.

Control indicator

The control unit, as it is commonly called, provides automatic control for the GS station. The control unit also does the following:

- It selects either of the dual-station transmitters as the main unit with the other being the STDBY unit. It also initiates transfer from the main unit to the STDBY unit if both monitors detect a radiated fault. It shuts down the station if the backup battery supply voltage becomes too low after extended station operation without primary AC power.
- It initiates shutdown of the station if both monitors detect a fault and the STDBY unit is the radiating unit.
- It provides status signals to the RCDU and transmitter transfer when initiated by the RCDU.
- It maintains station operation if only one monitor detects a radiated fault.

The control unit also locally displays and provides a status signal to the RCDU for alarms caused by conditions other than radiated faults.

The following conditions cause abnormal indications but do not initiate equipment transfer:

- Power supply fault.
- Single monitor alarms.
- Abnormal primary power.
- Abnormal shelter temperature.
- Abnormal battery charge/discharge current.

To facilitate maintenance, bypass switches are provided to inhibit automatic transfers initiated by monitor alarms and commands from the RCDU. STDBY transmitters can also be energized for maintenance without disturbing normal station operation.

Alarm monitor

The alarm monitor, commonly called the monitor, continuously monitors the navigational components of the GS RF signal and activates an alarm circuit should these components vary outside preset limits. In a NR GS, the monitored parameters are path DDM, near field path DDM, width DDM, path RF level, and path modulation percentage. CE GSs monitor three parameters dealing with the information supplied by the CLR transmitter: CLR percent modulation, CLR RF level, and CLR FREQ SEP.

Radio transmitter

The NR GS transmitter produces the RF output and the audio modulation signals of the GS station. Two modulated signals CSB and SBO, which are generated in the GS transmitter, form the glide path. In a CE GS, the CLR transmitter produces an additional RF signal and modulates this carrier with 150 Hz only.

Radio frequency transmission switch

The RF transmission switch, commonly called the changeover unit, provides in-line monitoring of RF signals and the RF feed line transfer required for dual-equipment NR GS stations. The carrier and sideband signals from each transmitter are coupled through coaxial relays to either dummy loads or the antenna. Two thru lines with metering connectors are in series between the coaxial relays and the outputs. The detected output of each metering connector is sent for monitoring purposes to the front panel wattmeter and phone jack through a selector switch.

Amplitude phase control unit

In a CE GS, an amplitude phase control unit (APCU) is substituted for the RF transmission switch. It performs all the functions mentioned above, and additionally, contains front-panel adjustments to adjust for the proper power and phase relationships between the SBO, CSB, and CLR fed to the three antennas.

Power supply

The power supply provides the GS with regulated +27 VDC operating voltage. It also maintains a charging voltage for the backup batteries.

Radio antenna

The antennas operate in a frequency range of 328 to 336 MHz and are used in the ILS to provide vertical guidance. Two antennas are used in the NR GS system and three are used by the CE system. This system is an image type; that is, it uses the ground plane in front of the antennas to reflect a signal, thereby, forming nulls as if a mirror image antenna of opposite phase were buried below the tower. Each antenna consists of three collinear dipoles mounted in front of one 90° corner reflector. The RF feed lines are protected by plastic snow covers. Heating units are included to prevent ice formation on the radiating elements.

205. Capabilities and limitations

You can find a detailed discussion of the technical characteristics of the AN/GRN–31 in TO 31R4–2GRN31–2–WA–1, *Combined Maintenance Operation Instruction, Radio Transmitting Set (Glide Slope Station)*. This lesson touches on only those characteristics most commonly used at the intermediate maintenance level. We will begin by covering the capabilities and limitations of the GS station.

Glide slope station

The GS station is designed for continuous unattended operation. It can be controlled locally, from the site, or remotely, from the control tower or RAPCON. It is capable of operating in the frequency range of 328.6 to 335.4 MHz horizontally polarized. The carrier is modulated with 90 and 150 Hz AM and a depth of modulation of 40 percent per tone. The system provides an adjustable glide angle between 2° and 4° depending on the individual installation. The width of the glide path can be adjusted between approximately 0.35° and 1.4°. The system is capable of operating at temperatures ranging from –58 to +158° F at altitudes from 0 to 10,000 feet. The system can withstand winds of 70 miles per hour with ½-inch of ice buildup on the antennas.

Control unit

The control unit uses four output status tones (705 Hz, 1,410 Hz, 2,256 Hz, and 2,820 Hz) for status and control functions. If an alarm occurs, the control indicator initiates transfer to the STDBY transmitter in 1.5 seconds. The actual delay from main shutdown to STDBY on is programmed for 20.3 seconds. The control unit responds to two input control frequencies, 900 and 1,175 Hz. The 900 Hz is the interlock frequency and the 1,175 Hz is the remote control frequency. The control unit also contains three of the front panel meters used for most PMIs: primary power meter, battery voltage meter, and the battery current meter.

Alarm monitors

The monitors contain the circuitry necessary to check path DDM (integral monitor), path DDM (near field), width DDM, percent modulation, and RF level. The monitors also check CLR percent modulation, CLR RF level, and CLR FREQ in a CE configuration.

Radio transmitters

The radio transmitters are single-channel and thumb-wheel controlled, with a frequency range of 328 through 336 MHz. The GS transmitter has two RF outputs connected to the GS antenna system. The carrier-plus sideband output is an AM signal. The modulation frequencies are 90 and 150 Hz. The SBO output is a double sideband with suppressed carrier. Nominal carrier output is 3 W into an unbalanced resistive load. The CLR transmitter in a CE GS produces one AM signal in the same frequency range as the REF transmitter but 8 kHz below its carrier frequency.

Radio frequency transmission line switch/amplitude phase control unit

The RF transmission switch NR and APCU (CE) offers a 50Ω impedance at 108 to 335.4 MHz. It also provides 25- and 5-W dummy loads for the STDBY equipment.

Power supplies

The power supplies provide a nominal +27 VDC from 115 VAC ±15 percent or 230 VAC ±15 percent. They are single phase with a capacity of less than 6A and are short circuit protected with a 3A maximum allowed from each power supply. The power supply drawer is identical to the ones used in the localizer (one drawer contains two power supplies) but given the reduced power requirements of the glide slope, only one power supply drawer is used.

Antenna group

The antennas are horizontally polarized with a frequency range of 328 to 336 MHz. They have a power-handling capability of 50 W unmodulated RF and offer a 16 dB minimum front to back ratio. Additionally, the heaters located in the antennas provide 240 W of heat.

206. Block diagram and theory of operation

The GS is primarily made up of a shelter, the equipment in the shelter, an antenna, and a monitoring system. Within this lesson, we cover the block diagram and start out by discussing the functional operation of the NR GS station.

Basic operation of the null-reference and capture-effect glide slope station

This GS station provides final approach glide path information to landing aircraft. Figure 1–21 shows the facility layout. To provide glide path information to landing aircraft, the GS station generates two RF signals.

One of the signals, which is amplitude modulated by 90 and 150 Hz, is the CSB signal. The 90- and 150-Hz sidebands of the CSB ultimately provide the REF for the space modulation that occurs after the signals are radiated. The second RF signal resembles double sideband, suppressed carrier in that only 90- and 150-Hz sidebands of the carrier are transmitted; consequently, we call this the SBO.

It is the space modulation of the CSB 90- and 150-Hz sidebands with the SBO 90- and 150-Hz sidebands that produce navigational information. These signals are transmitted by two antennas and the resulting pattern of those signals provides vertical descent guidance to approaching aircraft. The sampled signals are detected by integral detectors, which are probes mounted in the transmitting antennas. The signals are fed to two monitors in parallel for measurement and analysis.

In a CE station, the two transmitters that operate simultaneously are the REF transmitter and the CLR transmitter. The CLR transmitter generates an RF signal 4 kHz below SAF. Additionally, the CLR transmitter receives a portion of the 150 Hz from the REF transmitter. The 150 Hz modulates the CLR carrier and is sent through the APCU to the upper and lower antennas used in this configuration.

As described in figure 1–22, the control unit provides manual and automatic control for the station. You can use it to select either the main or the STDBY transmitter. It can automatically initiate a transfer from the main to the STDBY transmitter when the two monitors detect a radiated fault. In a NR GS, each transmitter sends the two RF outputs (CSB and SBO) to the changeover unit. These two signals from one transmitter radiate out of two antenna arrays. Each array has three dipoles. The two signals from the other transmitter feed to the dummy loads. The CSB signal applies to the lower antenna and the SBO signal applies to the upper antenna. In a CE GS, the three outputs from the REF and CLR transmitters apply to the APCU and this is where their amplitude and phase adjust. From there, the three signals go to three antennas to form the radiation pattern required. Integral monitoring makes sure of the integrity of the radiated GS signals. The sample signals are matched with system limits in the monitors. If the limits exceed parameters in the monitors, an alarm signal goes to the control unit that then initiates a transfer to the STDBY transmitter.

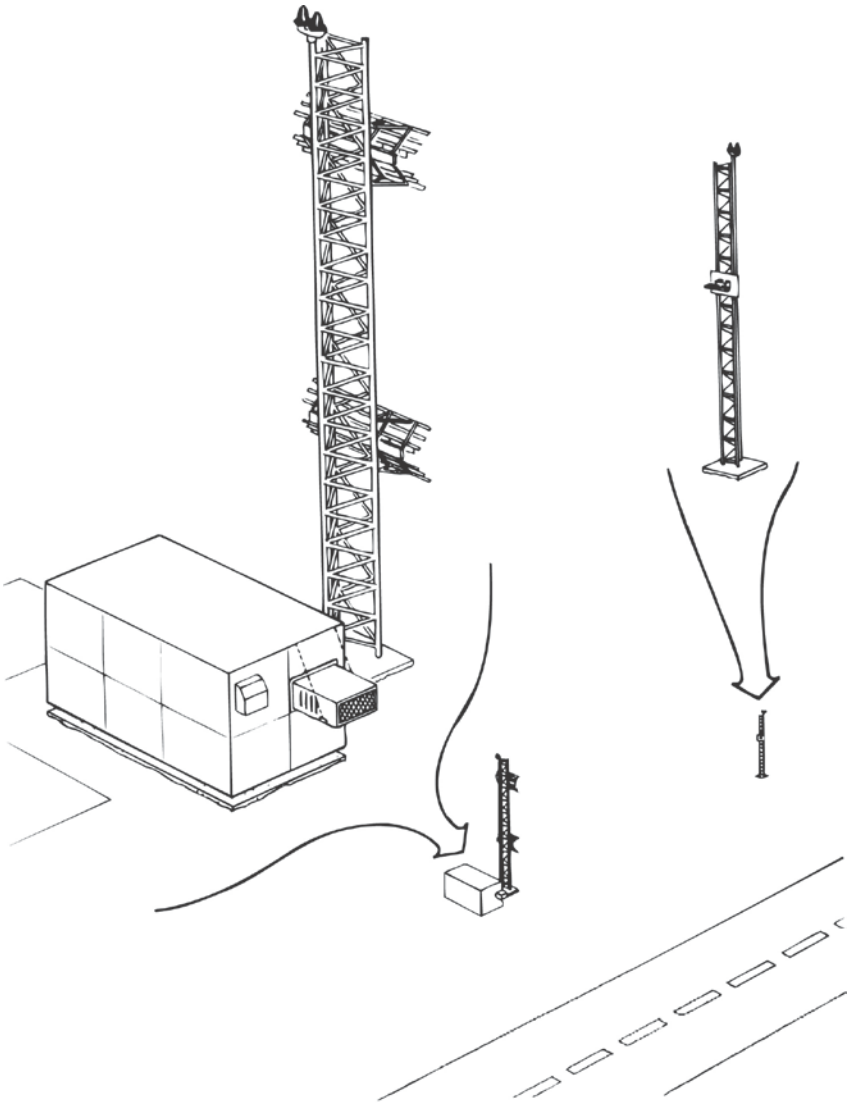

Figure 1–21. Glide slope station layout.

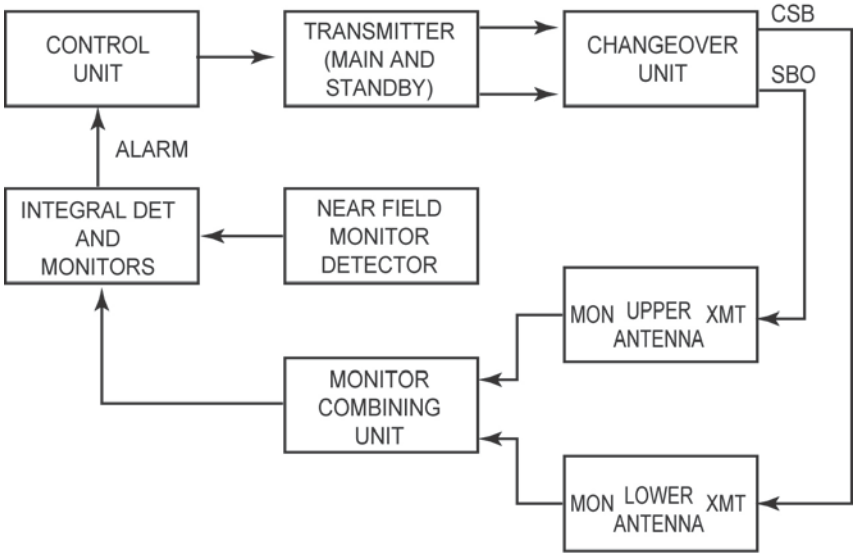

Figure 1–22. Null-reference glide slope station block diagram.

Glide slope functional block diagram

Referring to figure 1–23, the power supply provides +27 VDC to the transmitters, monitors, and control unit. It also keeps the batteries in the battery box charged to the normal operating level. These batteries supply the operating voltage automatically in case of a power failure. The control unit provides automatic control of the GS station transmitter. It is used to select either transmitter number 1 or 2 as the main transmitter. The STDBY transmitter output connects to a dummy load. The control unit initiates the transfer from the main to the STDBY transmitter if both monitors detect a radiated fault. The control unit also displays and provides a status signal to the RCDU for alarms caused by other than radiated faults.

The operating transmitter, main or STDBY, generates two RF signals in the 328 to 336 MHz frequency range. These are the CSB and SBO signals we mentioned previously. RF probes mounted on each antenna element sample the radiated RF signal and feed that sample to integral detectors through the monitor combining unit. From the integral detectors, the detected path and width signals feed to the two monitors in parallel. Parameters of these signals compare against preset alarm limits in the monitor.

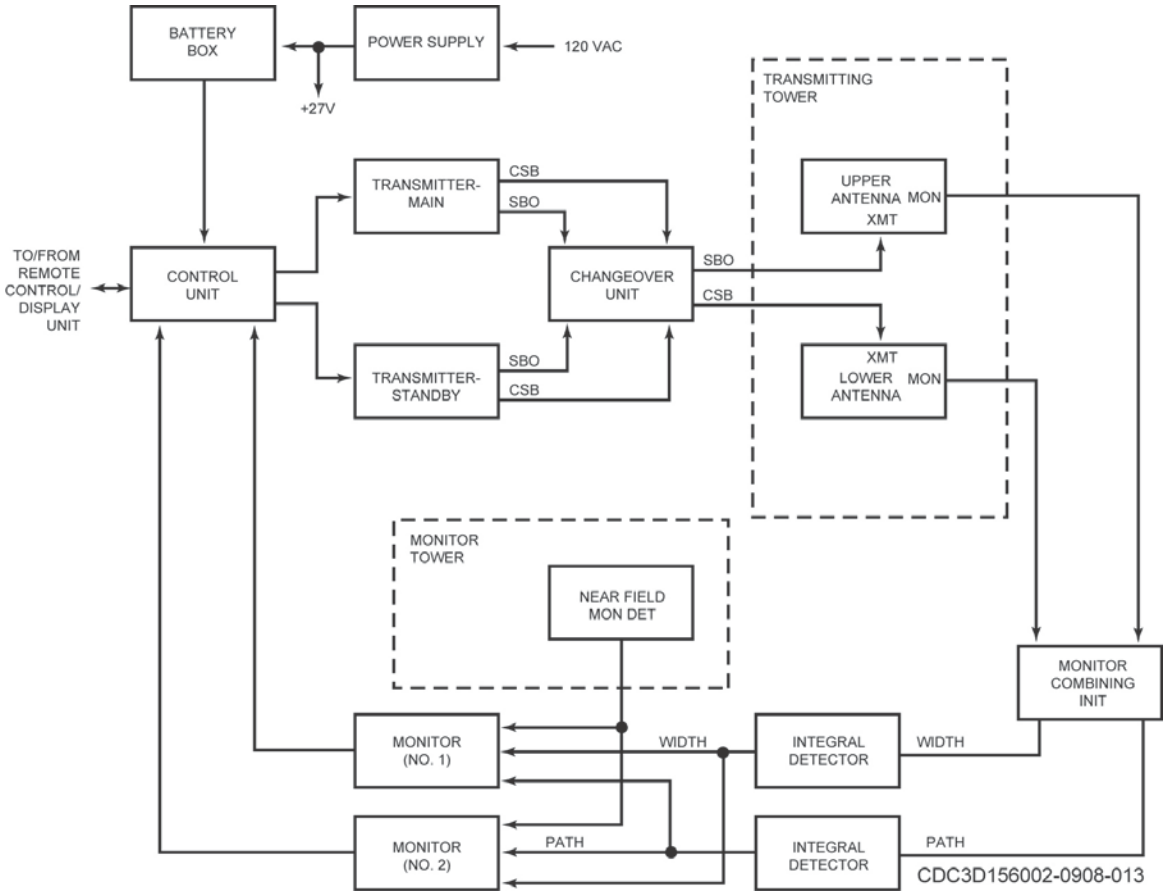

Figure 1–23. Null-reference glide slope station detailed block diagram.

Out of tolerance indications result in an alarm signal sent to the control unit. An alarm signal to the control unit from both monitors for the same parameter generates an alarm for the station. In addition, the control unit activates the STDBY transmitter and turns off the main one. An alarm indication from the STDBY transmitter results in the turning off of the station.

Similarities between the localizer and glide slope

Figure 1–24 shows the NR GS equipment rack with equipment. Other than having one cabinet instead of two, the equipment cabinets (unit 1) are almost identical for both the localizer and GS. The control

units (unit 2) and power supplies are also identical and interchangeable between the localizer and GS. The only other unit that is entirely interchangeable, considering it is the NR GS, is the changeover unit. Portions of some other units are also interchangeable or perform the same functions.

Within the monitors, most of the circuit cards, with the exception of the A3 and A8 cards, perform identical functions in both the localizer and GS. To interchange the cards other than A3 and A8 would only require alignment or changing a jumper. The entire monitor is not interchangeable because of the difference in cards (like A3/A8) and because, in some cases, the pin connections to the cards are different. The A5 card is a good example of this last point; although the card is interchangeable, the pin connections vary depending on the type monitor.

In the transmitter, (CRS transmitter in the localizer and the REF transmitter in the glide slope), the A8 and A10 cards perform identical functions and are basically interchangeable. The 4A9 module, diode-switching network, also performs identical functions in both the localizer and GS. A line used to provide 180° phase shift in creation of the SBO signal does require being the appropriate length for either the localizer or GS frequency.

Transmitter

The NR GS transmitter produces the required path-forming signals of the GS station. Two nearly identical RF channels in the GS transmitter provide a CSB signal and SBO signal, both with 90- and 150-Hz modulation that originate in the GS transmitter. The CSB signal power output is normally 3 W, and the GS transmitter frequency is the assigned GS frequency in NR stations. The SBO signal power output is normally 45 mW. These powers are nominal values. The CSB power is normally established for usable distance at the commissioning flight check and maintained at the established value. The SBO power is site dependent because it is adjusted to attain the proper/desired path width. Once the SBO power is established, it should be maintained at the established value. In a CE station, an additional RF output is created and sent to the CLR transmitter. Other than that, the two types of systems employ the same REF transmitter. Figure 1–25 shows the various circuits that make up the GS transmitter.

Synthesized frequency source (4A1)

The SFS for the GS is identical to the one in the localizer except the output frequency range is 328 to 335 MHz and the power is 900 mW.

Driver and filter/detector assemblies (4A2/4A4)

These modules are identical in operation and function to the filter/detector assemblies in the localizer; however, they are not interchangeable between the localizer and GS—one reason being that the component values are determined by the frequency and/or power, thus they are different. Another difference, as far as the drivers are concerned, is that in the localizer Q1 is a variable gain amplifier, which keeps the output from the SFS constant. In the GS, the SFS provides the automatic level control.

Modulator assembly (4A8)

The modulator assembly is completely interchangeable between the localizer and GS. The card performs the same function in the same way at both facilities.

Diode switching network (4A9)

Operation of the diode-switching network in the GS is identical to its operation in the localizer, even the REF designation is still 4A9. Instead of the 180° length of line mentioned in the localizer CRS transmitter, the GS is actually three times 180°, which is 540°. Otherwise, as stated earlier, the diode-switching network in the GS is identical to its operation in the localizer.

90- and 150-Hz generator assembly (4A10)

The 90- and 150-Hz generator assembly is completely interchangeable between the localizer and GS. One difference between the two is that in the localizer 90 and 150 Hz travel from this card to the CLR transmitter. Only the CE GS configuration uses a CLR transmitter that only receives 150 Hz from this card—not both tones. The point is that while the cards are identical, the outputs routed from the card are not.

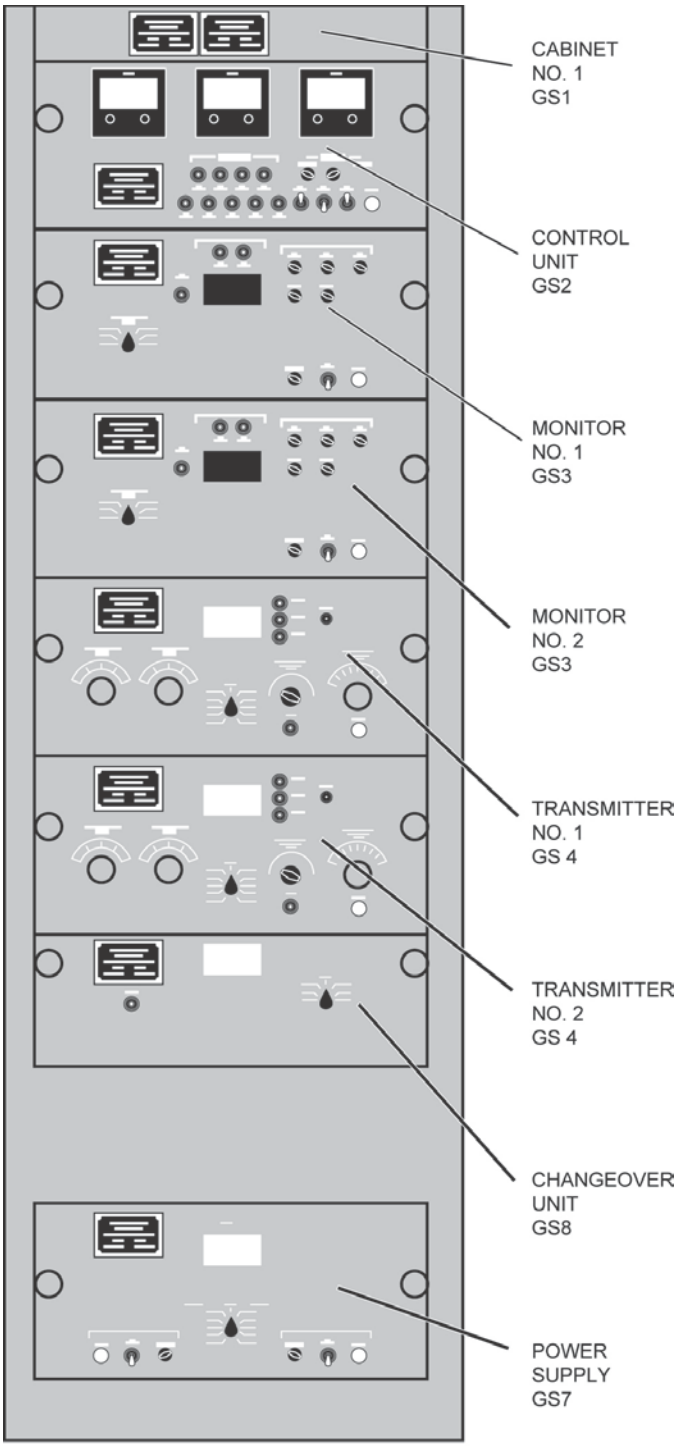

Figure 1–24. Null-reference glide slope station cabinet.

Capture-effect clearance transmitter

The CLR transmitter produces an RF output that is 8 kHz below the frequency of the REF transmitter output. It receives its audio signal from the REF transmitter (150 Hz only) and amplitude modulates the RF signal to a depth of 90 percent prior to transmission. The SFS and filter detector assembly work identically to the REF transmitter. However, the CLR transmitter does not have a diode-switching network or a 90- and/or 150-Hz generator card since no SBO signal is required and the audio modulation comes from the REF transmitter.

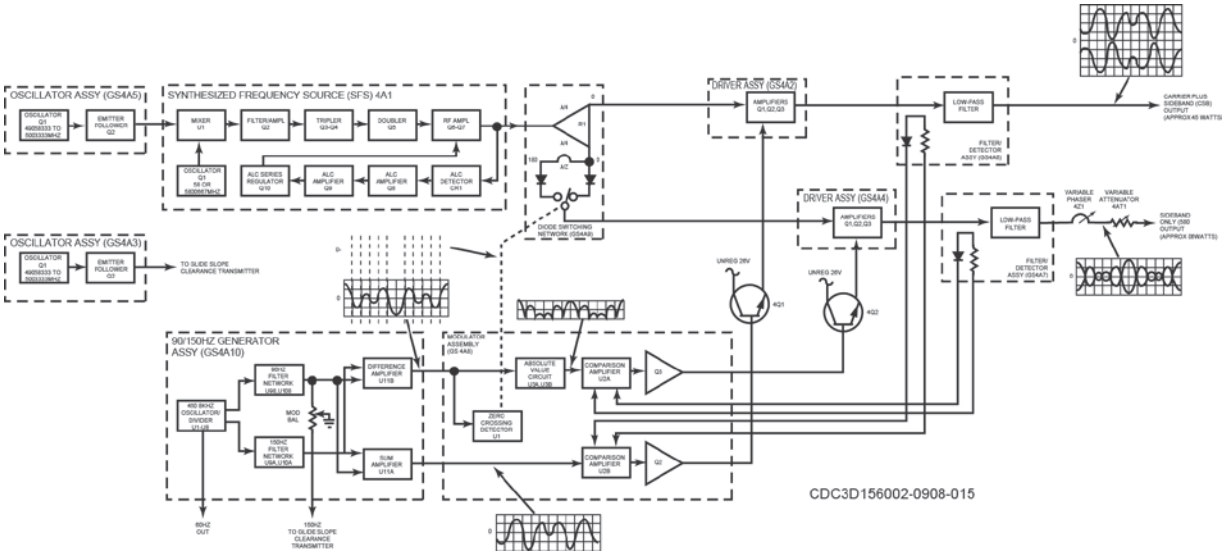

Figure 1–25. Glide slope transmitter block diagram.

Antenna system

As we mentioned earlier, the changeover unit of a NR GS is interchangeable with the changeover unit of the localizer. Consequently, the RF transfer and metering functions are also applicable to the NR GS. From the changeover unit, as with the localizer, the signals go to the antenna.

Antenna operation

The angle of descent information generated by GS equipment is a horizontally polarized, composite field pattern modulated by 90 and 150 Hz (fig. 1–26). The radiation pattern establishes a straight-line descent path in a vertical plane that contains the runway centerline extension. The 90-Hz modulation predominates above the glide path and 150 Hz predominates below. The glide path angle can have values from 2° to 4° depending on topography of the runway approach area, but the angle is normally 2.5° to 3.0°. If the aircraft is on the glide path, the airborne indicator shows no deflection (fig. 1–27). If the aircraft is above the glide path, the 90-Hz depth of modulation predominates causing a downward deflection of the indicator pointer. If the aircraft is below the glide path, a similar but opposite pointer deflection occurs (150 Hz predominant).

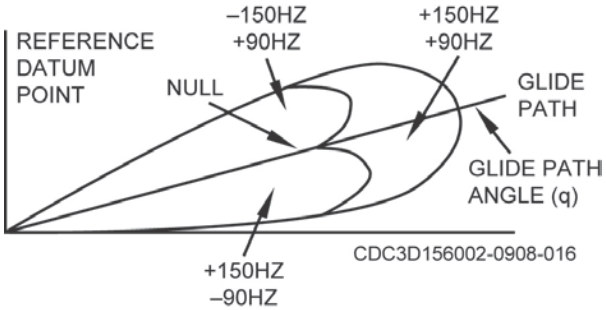

Figure 1–26. Typical glide slope radiation pattern.

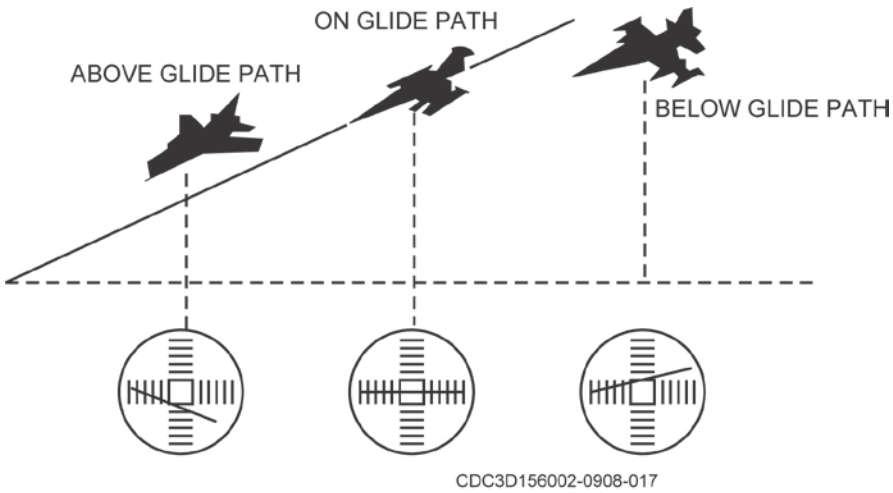

Figure 1–27. Aircraft instrument panel indicator.

The antenna assembly consists of three collinear, horizontally polarized dipoles spaced three-fourths wavelength apart (at 332 MHz) and backed up by a 90° corner reflector. This arrangement concentrates the radiated signal in the direction of the approaching aircraft and reduces the effects of reflection from nearby objects. The input impedance of 50Ω is achieved by matching the three dipoles through a quarter-wave transformer. Power to the three dipoles of each antenna assembly is divided equally, with the two outer dipoles fed in-phase and leading the center dipole by approximately 25°.

The radiated signal from each antenna samples by loops located within the respective antenna assembly (fig. 1–28). The signals picked up by these loops combine and travel to the GS integral monitor network, which combines the signals from the two GS antennas in a controlled phase and amplitude relationship. The resultant signals then travel to the GS monitor where various signal parameters are monitored.

Heaters

Each dipole has a set of heaters for de-icing that are mounted with aluminum tape and controlled by a factory-set master thermostat. Operating in conjunction with the station master thermostat switch, the antenna thermostat enables heater action when ambient temperature lies within the ice formation range. The heaters operate on 120/240 VAC, single-phase; the total power consumption of the heaters is 240 W.

Radio frequency combining network

Probes in the upper and lower antennas pick up or sample the SBO and CSB RF signals. These sample signals travel to the monitor combining unit and create simulated signals (fig. 1–29). These signals are also equivalent to the signal received by a GS receiver. The CSB RF signal from the lower antenna feed to the 8 dB fixed attenuator AT–3 in the monitor combining unit. The SBO RF signal from the upper antenna feeds to phaser Z–1. Phaser Z–1 adjusts the relative phase of the signal to make sure that the sideband signals are in phase with the carrier signals. The output from phaser Z–1 goes through the 15 dB fixed attenuator AT–1 to combiner HY–1. The CSB RF signal from the lower antenna feeds to power divider Z–2 after leaving fixed attenuator AT–3. The carrier signal from power divider Z–2 goes to combiner HY–1. The two inputs to combiner HY–1 combine to produce the WIDTH OUTPUT. This signal is equal to the combined signal received by a GS receiver when below the glide path at the width requirement. The carrier signal from power divider Z–2 is the PATH OUTPUT. This signal simulates the signal received by a GS receiver when on the glide path. In a CE GS, detected signals from the three antennas must be separated before going to the monitors.

Therefore, the RF combining unit contains CLR detector assemblies U1 and U2, which enable the GS monitors to receive the additional CLR signals to monitor.

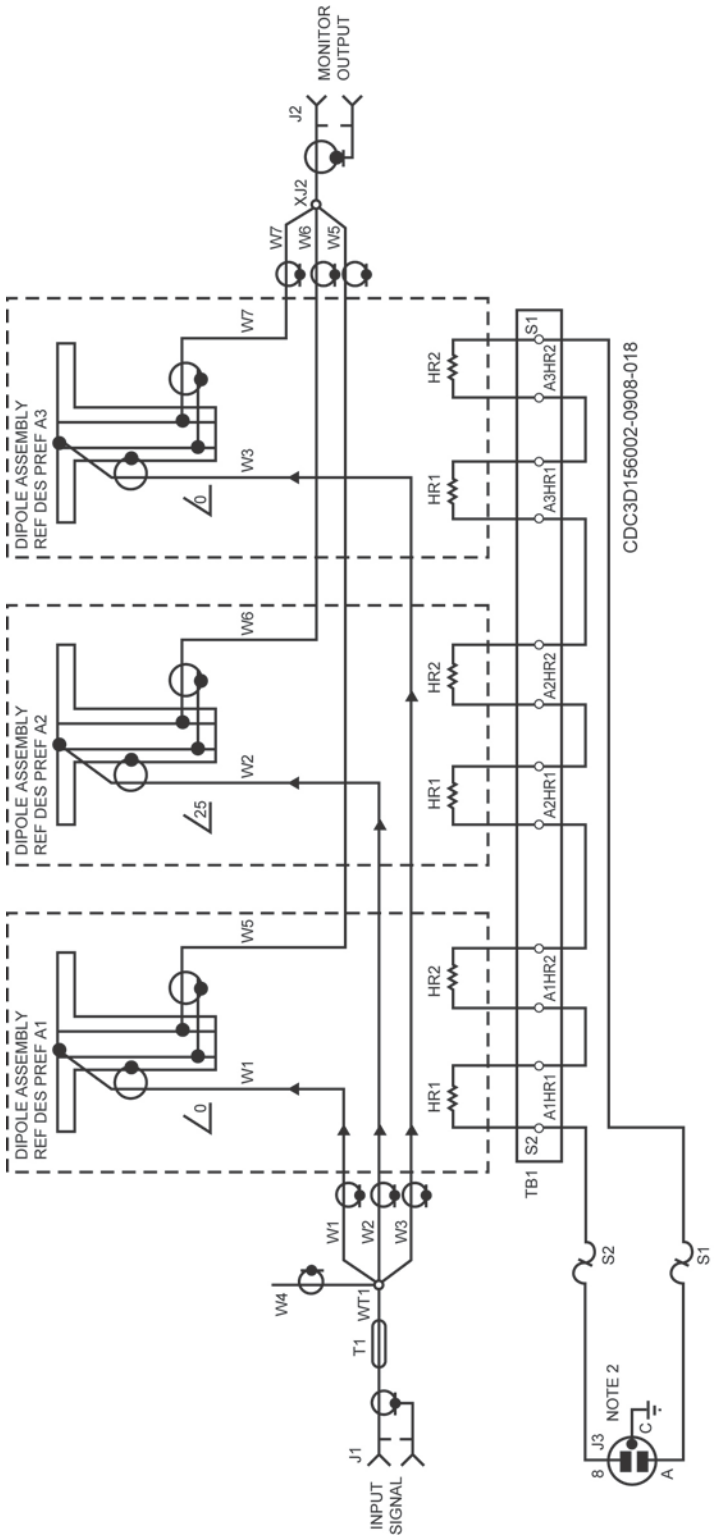

Figure 1–28. Antenna schematic diagram.

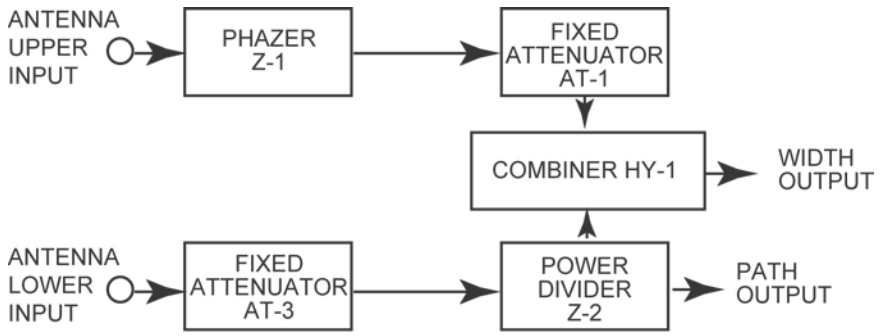

Figure 1–29. Monitor combining unit block diagram.

Glide slope monitors

The GS monitor is a dual-purpose unit (fig. 1–30). If the GS is being used in the NR configuration, several circuits are not used. They are reserved for use in the CE configuration; however, we cover the entire monitor here. Any discussion of CLR signals or of the CLR assembly pertains only to monitors used in CE GS stations.

The GS monitor measures five parameters of the GS RF signal, plus three parameters of the CLR RF signal if the monitor is used in a CE GS station. The measurements are made in a fixed sequence of programmed measurement routines. As a self-test, the monitor also has a test DDM measurement routine with DDM simulated by fixed REF voltages. The parameters selected in each measurement routine of the program are actually measured (indirectly) and each measured value can be selected for display.

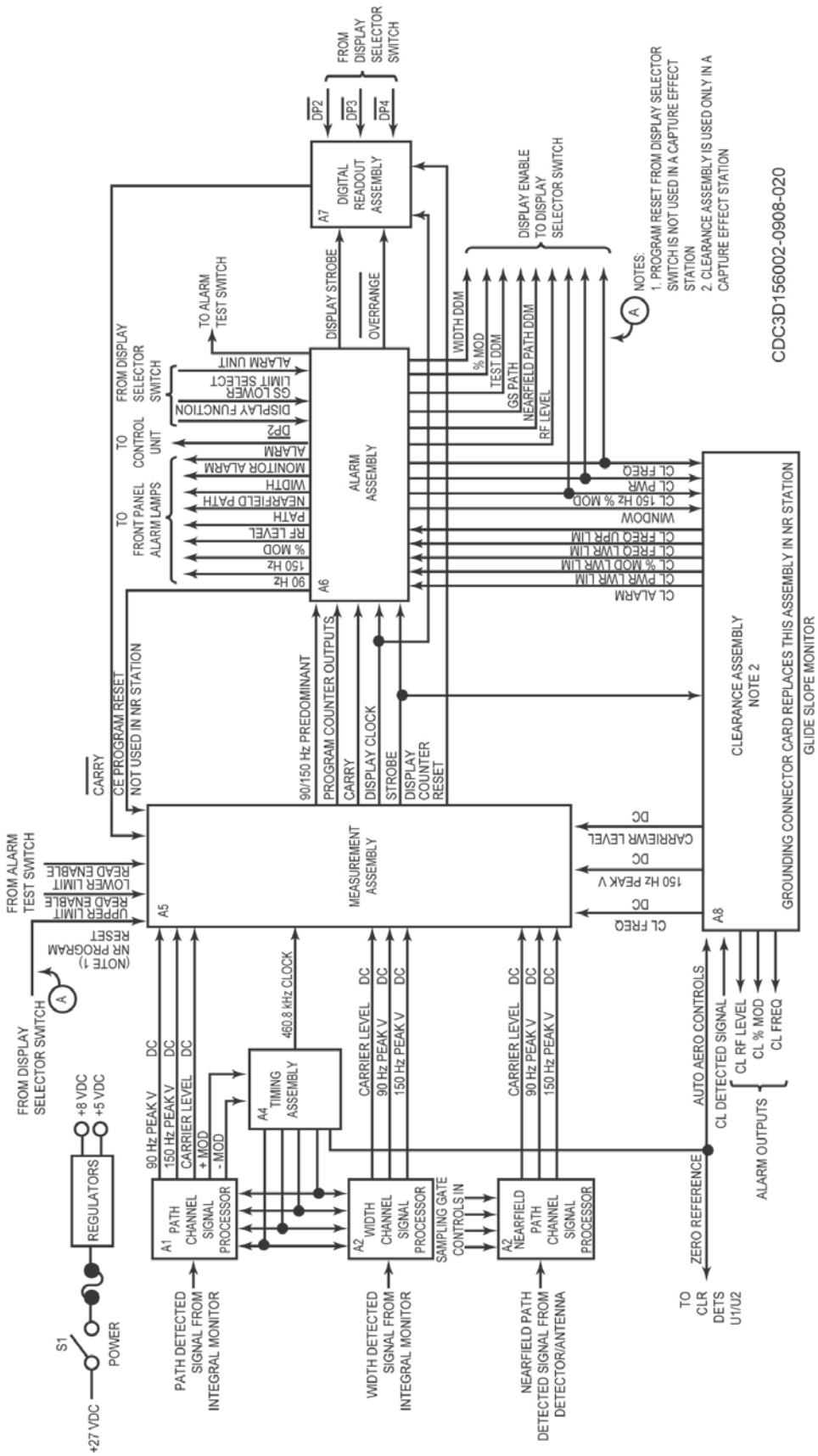

Figure 1–30. Glide slope monitor block diagram.

Common cards

The GS monitor uses exactly the same cards as the localizer CRS monitor, with the exception of the near-field path signal processor and the GS CLR assembly. Remember, although pin connections and routing of signals may be different on the schematics, the actual circuit cards are the same.

Timing assembly

Although timing assemblies are interchangeable, in the CE GS configuration, the timing assembly performs additional functions; these additional functions are not used in other monitors. The timing assembly generates a zero REF signal used in the integral detectors (U1/U2) of a CE GS. The timing assembly in the CE GS configuration generates the auto zero 1 and auto zero 2 signals. Beyond the generation of the signals just mentioned, the operation of the timing assembly is identical to what we previously discussed.

Clearance assembly

The CLR assembly works only in the monitor of a CE GS station. It processes the signal from an integral detector for measurement of CLR, GS carrier frequency difference, CLR modulation percentage, and CLR carrier level. The signal at the input of the detector nonlinearity compensator is obtained by mixing in the integral detector and is the frequency difference of the REF and CLR RF signals (nominally 8 kHz), to include the 150-Hz modulation of the CLR carrier, plus DC. The CLR assembly outputs are DC voltage analogs of CLR carrier level, 150 Hz peak amplitude, and frequency difference between the CLR and GS carriers, all of which travel to the measurement assembly.

Adjustments for the CLR alarm limits are located on the CLR assembly, but the active alarm limit circuits are in the alarm assembly. If any alarm exceeds limits, an alarm signal travels to the control unit. Lamp drive circuits in the CLR assembly drive external indicators (CLR RF LEVEL, CLR PERCENT MOD, and CLR FREQ DIFF) for out-of-tolerance CLR parameters that are located on the front panel of the CLR transmitter. Program counter outputs from the measurement assembly select preset alarm limits for each routine of the program.

NOTE: Parameter alarm circuits on the CLR assembly are selected by outputs from the alarm assembly as part of the measurement program.

Control unit

After generating, distributing, radiating, recombining, and monitoring the signals, you need control. The GS control unit allows for automatic or manual (local or remote) control of the system. The control unit is located at the top of the REF transmitter equipment cabinet. It provides automatic station controls, station status displays, delay functions, and station transfer bypasses.

Automatic station control

The control unit provides automatic control for the localizer in the following six ways:

1. Selects either of the dual-station transmitter groups as the main unit with the other group being the STDBY unit.
2. Initiates transfer from the main unit to the STDBY unit if both monitors of the dual station detect a radiated fault.
3. Initiates shutdown of the station if a radiated fault is detected by both monitors of a dual station and the STDBY unit is the radiating unit.
4. Maintains station operation if only one monitor of the dual station detects a radiated fault.
5. Provides status signals to the associated RCDU.
6. Provides transmitter transfer as initiated from the RCDU.

The control unit controls both transmitters by energizing a relay in the REF transmitter. Energizing the REF transmitter's' relay allows operating voltages through the relay contacts for that transmitter and its respective CLR transmitter (CE GS). If a transfer or shutdown is required, the control unit de-

energizes the relay in the on-air transmitter and energizes the opposite REF transmitter's relay. The control unit also energizes or de-energizes coaxial relays in the changeover unit (APCU in a CE GS) as transfers are required.

Station status displays

The control unit also locally displays the status of the GS and provides a status signal to the RCDU for alarms caused by conditions other than radiated faults. When the glide slope is operating normally with the main transmitter on the air, four tones become available from the control unit to the RCDU, which are 705 Hz; 1,410 Hz; 2,256 Hz; and 2,820 Hz. The presence of all four tones at the RCDU causes only the MAIN lamp for the GS to be illuminated. If certain conditions occur at the GS station, one or more of these tones do not go to the RCDU.

Depending on which tones are not being sent, the STDBY lamp, abnormal (ABNML), executive bypass (EXEC BYP) or OFF lamp(s) may be lit at the RCDU. Conditions that cause abnormal indications, but do not initiate transfer are the following:

- Power supply fault.
- Single monitor alarms.
- Abnormal shelter temperature.
- Monitor or executive control bypass.

The control unit displays the status of the GS by green, yellow, and red indicators on the front panel, as shown in the table below.

Control Unit Indications	
Indicator Illuminated	**Indicates**
Red	Fault condition exists and the station is off.
Yellow	Abnormal condition exists in the system.
Green	Main transmitter is on.

Remember, an ABNML condition does not necessarily cause the station to shut down. As we stated above, any condition other than the main transmitter on the air causes the control unit to cease sending one or more of the status tones to the RCDU.

Delay functions

Delay from the initiation of a transfer to the time that the defective unit of the dual station shuts down can be set from 0.5 second to 14.5 seconds in increments of 0.5 second. Normally, the time delay for a GS station is 1.5 seconds. After the main unit shuts down, the STDBY unit electrically inhibits for a period of 20.3 seconds. Once the STDBY unit begins radiating, an additional 2 seconds adds to the set delay time to allow the monitors and transmitters to stabilize. After 2 seconds have elapsed, the alarm delay time returns to the preset delay time.

Station transfer bypass (executive control bypass)

You can bypass monitor alarms locally, thereby inhibiting the transfer function, to facilitate maintenance functions. Maintenance can also be performed on the STDBY unit without disturbing the radiating unit by locally energizing the STDBY transmitter(s).

Ground check

The GS not only monitors the radiating signal, but as a RAWS technician, you will monitor the radiating pattern by physically ground checking the system using a PIR. Ground checking the GS's radiating pattern confirms what the aircraft will see in the air. Most GS ground checks are only done on the NR system. The first NR check is the system ground check. This check will be performed after

a flight check to obtain REF readings. The other check performed on the NR is ground phasing PMI, which is performed after the flight check and an 84-day PMI. The only type of ground check done on a CE or sideband reference system is the ground phasing PMI. Just like the NR, this ground phasing PMI is accomplished on an 84-day PMI. Your job is to make sure there are not any major changes to the radiated signal, by comparing your new DDM readings to the DDM readings (REF data) obtained after flight check.

Self-Test Questions

After you complete these questions, you may check your answers at the end of the unit.

204. Functional description

1. What is the purpose of the glide slope station?

2. What are the two RF signals generated by the NR glide slope?

3. What conditions cause abnormal indications on the control indicator but do not initiate equipment transfer?

4. What is the purpose of the alarm-monitors?

5. What is an image-type antenna?

205. Capabilities and limitations

1. How can the glide slope station be controlled?

2. What degree of glide angle can the glide slope provide?

3. What output status tones does the control unit use?

4. What input control frequencies does the control unit respond to and how is each frequency used?

206. Block diagram and theory of operation

1. What is the purpose of the NR glide slope station?

2. What two RF frequencies are generated by the glide slope station?

3. What happens if the limits are exceeded in the monitor?

4. What function does the control unit perform?

5. What information is derived from the integral detectors?

6. What is the result of an alarm indication from the STDBY transmitter?

7. Name the three units of GS equipment that are identical to those used in the localizer.

8. What is required to interchange monitor cards (other than A3 and A8) between the localizer and glide slope?

9. Is the diode-switching network operation identical with that in the localizer? Why or why not?

10. What is the normal output power of the GS CSB and SBO signal?

11. What glide slope configuration uses a clearance transmitter?

12. Name the parts of the antenna assembly.

13. What samples the radiated signal from each antenna?

14. What components samples the SBO and CSB RF signals?

15. What is the purpose of the phaser Z–1?

16. Which signal simulates the signal received by a GS receiver when on the glide path?

17. When would you use the CLR portion of the GS monitor?

18. What parameters are processed by the CLR assembly?

19. What is the range of time between the delay of a transfer from a defective unit can be adjusted?

20. Which function of the GS control unit allows maintenance to be performed on the STDBY unit without disturbing the radiating unit?

Answers to Self-Test Questions

201

1. Minimum of 250 feet from the center of the localizer antenna array.
2. 115/225 VAC ±10 percent, 50 ±3 Hz or 60 ±3 Hz, and 3 phase at 100 A.
3. 14.
4. Through the antenna distribution box.

202

1. 108 to 112 MHz.
2. The carrier is modulated with 90 Hz, 150 Hz, and 1,020 Hz AM with a depth of modulation of 20 percent, 20 percent, and 5 percent respectively.
3. Interlocks.
4. 705 Hz, 1,410 Hz, 2,820 Hz, and 2,256 Hz.
5. 20.3 seconds.
6. CRS and CLR.

203

1. (1) Radiate the pattern.
   (2) Monitor the pattern.
   (3) Control the transmitter.
2. The CRS carrier is transmitted at 4.75 kHz above the SAF, while the CLR carrier is transmitted at 4.75 kHz below the SAF.
3. Space modulation.
4. Measure the output signals power and switch which transmitter routes to the distribution unit.
5. Because they are at different frequencies.
6. Signals that will be radiated by the localizer are monitored before they are radiated.
7. CRS monitor.
8. CRS transmitters.

9. To the CRS and CLR monitors.
10. Distribution unit.
11. CSB = 15 W, SBO = 360 mW.
12. To modulate the CSB signal for station identification.
13. SFS.
14. 460.8 kHz.
15. An output occurs to reset the divider chain, thus the proper phase relationship between the 90 and 150 Hz signals is assured.
16. Routing and switching.
17. SBO.
18. CSB = 10 W; SBO = 300 mW.
19. 4.75 kHz below the SAF.
20. RF transfer and RF measurement.
21. To distribute the CRS and CLR transmitter outputs to the antenna array in the proper phase and amplitude.
22. 90°.
23. About 10 dB.
24. Mask nulls formed by additional lobes of the CRS transmitter.
25. Station shutdown.
26. Sampling points in the interlock assembly.
27. There is no CLR transmitter to assist in producing the intermediate frequency.
28. CRS monitor and CLR monitor.
29. CRS monitor.
30. 460.8 kHz.
31. In the timing assembly.
32. Alarm assembly.
33. Localizer CRS monitor.
34. Clearance assembly.
35. .200.
36. Near field, the far field, and the ground phasing.
37. The near field arc is located approximately 1,000 feet from the antenna array and consists of check points from 35º on one side of centerline to 35º on the other side. The far field arc is located around the area of the runway threshold and consists of check points from 5º to 5º penetrating the centerline.
38. To prevent the two signals from combining.

204

1. To provide final approach glide path information to landing aircraft.
2. An RF carrier signal modulated at 90 and 150 Hz and a sideband only signal modulated by 90 and 150 Hz.
3. Abnormal primary power, abnormal shelter temperature, abnormal battery charge/discharge current, power supply fault, and single monitor alarms.
4. To continuously monitor the navigational components of the glide slope RF signal and activate an alarm circuit should these components vary outside preset limits.
5. An antenna that utilizes the ground plane in front of the antennas to reflect signal, thereby forming nulls as if a mirror image antenna of opposite phase were buried below the tower.

205

1. Locally, from the site, or remotely, from the control tower or RAPCON.
2. The system provides an adjustable glide path between 2° and 4° depending on the individual installation.
3. 705 Hz, 1,410 Hz, 2,820 Hz, and 2,256 Hz.

4. 900 Hz, the interlock frequency; 1,175 Hz, the remote control frequency.

206

1. It provides final approach glide path information to landing aircraft.
2. RF carrier signal modulated at 90 and 150 Hz (CSB) and a double sideband, suppressed carrier signal modulated at 90 and 150 Hz (SBO).
3. An alarm signal goes to the control unit that initiates a transfer to the STDBY transmitter.
4. Provides automatic control of the glide slope station transmitter used to select either transmitter 1 or 2 as the main transmitter, initiates transfer from main to STDBY if both monitors detect a radiated fault, and displays and provides a status signal to the RCDU.
5. The detected path and width signals.
6. The station will turn off.
7. Control unit, changeover unit, and power supply.
8. Alignment.
9. Yes, the operation is the same, instead of 180º length of line in the localizer, it is 3 times or 540º in the glide slope.
10. CSB = 3 W, SBO = 45 mW.
11. The capture-effect system.
12. Three collinear, horizontally polarized dipoles spaced 3/4 wavelength apart.
13. Loops located within the respective antenna assembly.
14. Probes.
15. Adjusts the relative phase of the signal to make sure that the sideband signals are in phase with the carrier signals.
16. Path output.
17. In a capture-effect glide slope.
18. Clearance and glide slope carrier frequency difference, clearance modulation percentage, and clearance carrier level.
19. 0.5 to 14.5 seconds.
20. Station transfer bypass.

Complete the unit review exercises before going to the next unit.

Unit Review Exercises

Note to Student: Consider all choices carefully, select the *best* answer to each question, and *circle* the corresponding letter. When you have completed all unit review exercises, transfer your answers to the Field-Scoring Answer Sheet.

Do not return your answer sheet to the Air Force Career Development Academy (AFCDA).

1. (201) Which colors are the localizer equipment shelter *generally* painted?
   a. International orange and white.
   b. Olive drab and black.
   c. Brown and tan.
   d. Red and white.

2. (201) How many assemblies support each localizer antenna?
   a. 1.
   b. 2.
   c. 3.
   d. 4.

3. (202) The *maximum* wind speed, in miles per hour (mph) the localizer equipment station is designed to withstand is
   a. 50.
   b. 70.
   c. 90.
   d. 110.

4. (202) How many megahertz (MHz) is the frequency range of radio transmitters in the localizer equipment station?
   a. 108 to 112.
   b. 324 to 336.
   c. 962 to 1,213.
   d. 2,250 to 2,259.

5. (202) What are the modulation frequencies, measured in hertz (Hz), in the localizer course transmitter?
   a. 90, 150, and 2,250.
   b. 90, 150, and 1,020.
   c. 150 and 2,259.
   d. 90 and 2,259.

6. (202) What number of watts is the nominal carrier plus sideband (CSB) output power of the clearance transmitter in the localizer?
   a. 10.
   b. 15.
   c. 20.
   d. 25.

7. (203) What general function is the *first* basic operation of the localizer station?
   a. Updating status.
   b. Radiating the pattern.
   c. Controlling the transmitter.
   d. Monitoring the radiated pattern.

8. (203) At which frequency is the clearance (CLR) carrier transmitted in the localizer?
   a. Station assigned frequency (SAF) –4.00 kilohertz (kHz).
   b. SAF +4.00 kHz.
   c. SAF –4.75 kHz.
   d. SAF +4.75 kHz.

9. (203) How many log-periodic dipole (LPD) antennas are there in the localizer antenna array?
   a. 7.
   b. 10.
   c. 14.
   d. 16.

10. (203) The radiation pattern of the course carrier is
   a. wider than clearance pattern.
   b. parallel to the clearance pattern.
   c. the same as the clearance pattern.
   d. narrower than the clearance pattern.

11. (203) How many monitors *must* detect a fault to cause an equipment transfer in the localizer?
   a. One.
   b. Two.
   c. Three.
   d. Four.

12. (203) What controls the localizer clearance (CLR) transmitters?
   a. Control unit.
   b. Changeover unit.
   c. Clearance monitors.
   d. Course transmitters.

13. (203) Where is the detected signal from the localizer antenna distribution unit sent?
   a. Changeover unit.
   b. Far-field monitor.
   c. Control unit and transmitters.
   d. Course and clearance monitors.

14. (203) Which unit is *not* tied into the control unit of the localizer?
   a. Distribution.
   b. Changeover.
   c. Power supply.
   d. Battery backup.

15. (203) The nominal localizer course transmitter carrier-plus sideband (CSB) and sideband only (SBO) power in watts (W) and milliwatts (mW) respectively are
   a. 15; 360.
   b. 10; 300.
   c. 5; 190.
   d. 3; 190.

16. (203) The diode switching network is responsible for
   a. amplifying the switched radio frequency (RF) by high level collector modulation.
   b. counting the number of clock pulses and supplying information to data selectors.
   c. shaping signals into clean sine waves.
   d. routing and switching.

17. (203) The localizer antenna array has a gain of how many decibels (dB)?
    a. 3.
    b. 7.
    c. 10.
    d. 28.

18. (203) Which antennas are the localizer clearance (CLR) signals applied to simultaneously?
    a. Entire array.
    b. Middle.
    c. Outer.
    d. Inner.

19. (203) The *most* likely thing that will happen if an antenna cable is broken or shorted is it will cause
    a. a transmitter changeover.
    b. an abnormal indication.
    c. a station shutdown.
    d. a cable fault alarm.

20. (203) Which parameter is *not* checked by the localizer course (CRS) monitors?
    a. Frequency separation.
    b. Radio frequency (RF) level.
    c. Identification (ID) percent modulation.
    d. Width difference in depth of modulation (DDM).

21. (203) What is the *only* difference between the localizer clearance (CLR) monitor and course (CRS) monitor?
    a. Frequency of the radio frequency (RF) signals.
    b. Measurement of the CLR frequency.
    c. Digital readout assembly.
    d. Timing pulse generated.

22. (203) A 17.2 percent modulation difference converted to difference in depth of modulation (DDM) is
    a. .017.
    b. .172.
    c. 1.72.
    d. 172.

23. (203) The modulation *percentage* of the sum of the 90 hertz (Hz) resultant and the 150 Hz resultant should always total
    a. 20.
    b. 40.
    c. 50.
    d. 100.

24. (203) Where on the airfield are you located if during a ground check you are taking a measurement from the 35-degree survey checkpoint?
    a. Runway centerline.
    b. Runway threshold.
    c. Near field arc.
    d. Far field arc.

25. (203) Why are localizer course (CRS) and clearance (CLR) transmitter's output frequencies separated by 9.5 kilohertz (kHz)?
    a. Accommodates the bandwidth of the combined signals.
    b. Prevents the signals from combining.
    c. Prevents incidental signal jamming.
    d. Matches aircraft receiver design.

26. (203) Which localizer output would result in a change in the capture points?
    a. 12 watt (W) course (CRS) carrier plus sideband (CSB).
    b. 200 milliwatt (mW) CRS sideband only (SBO).
    c. 10 W clearance (CLR) CSB.
    d. 15 W CRS CSB.

27. (204) Which situation causes a fault condition and initiates equipment transfer in the glide slope (GS)?
    a. Abnormal shelter temperature.
    b. Abnormal primary power.
    c. Single monitor alarms.
    d. Dual monitor alarms.

28. (204) Which reference is *not* a monitored parameter in the null-reference glide slope (GS)?
    a. Path difference in depth of modulation (DDM).
    b. Path radio frequency (RF) level.
    c. Ident percent of modulation.
    d. Width DDM.

29. (205) The glide slope (GS) carrier frequency is modulated with what percentage of depth of modulation per tone?
    a. 20.
    b. 40.
    c. 70.
    d. 95.

30. (205) Which hertz (Hz) signal is *not* an output status tone of the control unit?
    a. 705.
    b. 1,410.
    c. 2,350.
    d. 2,820.

31. (206) Which signal or signals are applied to the lower antenna in the null-reference glide slope (GS)?
    a. Carrier-plus sideband (CSB) and clearance (CLR).
    b. CLR and sideband only (SBO).
    c. CSB only.
    d. SBO only.

32. (206) The diode switching network (4A9) in the glide slope (GS) differs from the 4A9 in the localizer when considering their length of line, because the GS is
    a. shorter than the localizer.
    b. two times that of the localizer.
    c. three times that of the localizer.
    d. four times that of the localizer.

33. (206) Which deflection does the airborne indicator show when the aircraft is on the glide path?
    a. Nominal 5 microamps.
    b. Nominal 1 microamp.
    c. Minimum.
    d. None.

Please read the unit menu for unit 2 and continue ➔

Unit 2. Very High Frequency Omnidirectional and Radio Range Tactical Air Navigation Systems

2–1. Very High Frequency Omnidirectional and Radio Range System 2–1
207. AN/FRN–44 capabilities and limitations 2–2
208. AN/FRN–44 theory of operation 2–3
209. AN/FRN–44A Very High Frequency Omnidirectional and Radio Range station 2–5
2–2. Tactical Air Navigation System 2–9
210. AN/FRN–45 capabilities and limitations 2–10
211. AN/FRN–45 block diagram and theory of operation 2–14
212. Tactical air navigation signal characteristics 2–17
213. AN/FRN–45C Tactical Air Navigation System 2–22
2–3. Very High Frequency Omnidirectional and Radio Range Tactical Air Navigation System Equipment Configurations 2–28
214. AN/FRN–43 Very High Frequency Omnidirectional and Radio Range Tactical Air Navigation System facility components and layout 2–28
215. Operating the local and remote personal computer 2–34
216. Control indicator 2–36
217. AN/FRN–43A Very High Frequency Omnidirectional and Radio Range Tactical Air Navigation System 2–39

IN THE EARLY DAYS OF FLIGHT, navigation was little more than looking around for familiar landmarks and estimating where you were. That system worked fine in daylight with good visibility, but flying does not only take place when it is sunny. Early aviators recognized the immediate need for some sort of navigational aid. One of the first steps to improving navigation involved the use of visual aids. These included large signs and symbols painted on the ground, hilltop bonfires, and later high-intensity beacon lights. Today's navigational aids are much more precise and reliable systems that are based on RF signals.

The ILS guides an aircraft to the runway. How does the aircraft, at a further distance, get to a point where the ILS approach to the runway begins? Both the VOR station and the tactical air navigation (TACAN) system provide an aircraft with information to guide it safely to the runway. The VOR is intended for civilian use, but there are a few systems the AF maintains. The TACAN is a military system similar to the VOR but is more accurate. A Very High Frequency Omnidirectional and Radio Range Tactical Air Navigation (VORTAC) station combines the VOR and TACAN in one location. This unit will cover each of these three systems—the VOR, TACAN, and VORTAC.

The AF is currently in the process of upgrading these systems to a new "Family of Systems" (FoS) program. This will modernize the AF navigation infrastructure across the United States and overseas. The new systems will provide lower maintenance costs, higher reliability, and remote maintenance monitoring capabilities. Each of these systems will be described in the applicable section below.

2–1. Very High Frequency Omnidirectional and Radio Range System

The importance of the VOR system is paramount to many aircraft across the globe. The VOR system provides critical guidance information to aircraft, especially in adverse weather conditions. The VOR system is a non-precision approach navigational aid, but it is critical for the aircraft to be able to get close enough to the system to be able to pick up the ILS for precision approach. Although it is rare to maintain a VOR without a TACAN in the AF, we will still discuss a few characteristics of the system. The bulk of the important VOR operations will be explained later in this unit when it is described in

the VORTAC. We will conclude this section with a brief overview of the new FoS AN/FRN–44A VOR navigational set.

207. AN/FRN–44 capabilities and limitations

In this lesson, we will examine the technical characteristics of the AN/FRN–44 VOR. We do not list every characteristic of the system but will instead only list those that might have some bearing on your ability to maintain the system. To start, a quick description of the characteristics and specifications will be describe.

Characteristics and specifications

The next table lists some of the most important capabilities and limitations of the AN/FRN–44 VOR system. You can find a complete listing of the system capabilities and limitations in TO 31R4–2FRN44–2–32GE–1–WA–1, *Organizational Maintenance – General Equipment Description, VOR Navigational Set, Type ANFRN–44.*

VOR Capabilities and Limitations	
Characteristics	**Specifications**
General	
Normal operating temperature	+32°F to +120°F
Battery backup capacity	Minimum two hours at full power (100 W)
Wind and ice loading (radome)	100 mph and one inch of ice
Operating altitude limit	Sea level to 9000 feet
Radio Transmitter	
Frequency range	108 MHz to 118 MHz
Frequency stability	±0.001%
Carrier power range	25 W to 100 W
Antenna	
Input impedance	50 Ω
Antenna pattern	Reference pattern deviates from circle no more than ±0.5 dB; 4 lobes are produced which are nominally circular. Nulls and equal signal points of the 4 lobes have maximum total spread within 1°.
Vertical pattern	Six dB gain at 10°. Maximum null depth 4 dB between 5° and 40° above the horizon.

AN/FRN–44 technical characteristics

The VOR system produces two signals (the reference and variable), whose phases are compared by the aircraft's receiver to give the aircraft information to determine its location in reference to the station or airfield. The variable signal is a double-sideband, suppressed carrier that varies at a 30-Hz rate and is commonly called the 30-Hz variable. The reference signal is a frequency modulated (FM) subcarrier (9,960 ± 480 Hz) that is AM on the carrier. The FM subcarrier varies at a 30-Hz rate, and is commonly called the 30-Hz reference. To provide a reference, the highest frequency (10,440 Hz) occurs when the radiation pattern is pointing north. The aircraft compares the phase relationship between the detected 30-Hz reference and 30-Hz variable signals to derive its guidance information.

The VOR facility can operate for a minimum of two hours at full power (100 W) on battery backup. The control indicator can operate for one hour on battery backup power. The radio transmitter has a frequency range of 108 to 118 MHz with a frequency stability of ±0.001 percent. The carrier output power range is from 25 to 100 W with a power stability of ±0.5 dB.

The monitors are also fail-safe in that any one internal monitor malfunction will cause a monitor alarm but not cause a system shutdown. For the reference (9,960 Hz AM modulation) and variable

(30 Hz space modulation) the typical nominal setting is 30 percent, with typical alarm limits set at ±2 percent. The ID alarm limits are set so that an alarm occurs within six seconds for continuous ID or 30 seconds for absent ID. In other words, if it gets stuck constantly transmitting ID, the monitors will realize something is wrong after six seconds. If it faults and does not send out any ID, the monitors will realize something is wrong after about 30 seconds.

The antenna operates at 108 to 118 MHz with an input impedance of 50Ω. The carrier power range may be from 25 to 100 W. The radome design can withstand 100 mph winds with 1 inch of ice accumulation.

208. AN/FRN–44 theory of operation

In this lesson, we go beyond the unit's overview and start examining how the different sections of the VOR operate as a system. This lesson begins with the discussion of the system functional operation. Refer to figure 2–1 as you read through the functional operation of the system and antenna components.

System functional operation

Here is where we discuss the overall functional operation of the VOR navigational set. The system is comprised of the following components:

- VOR cabinet—contains the digital computer, monitors, transmitter, and two power supplies.
- Local personal computer (PC)—located in the shelter equipment room.
- Remote PC and printer—located in the remote maintenance work center (RMWC).
- Control indicator—located in the ATC facility.

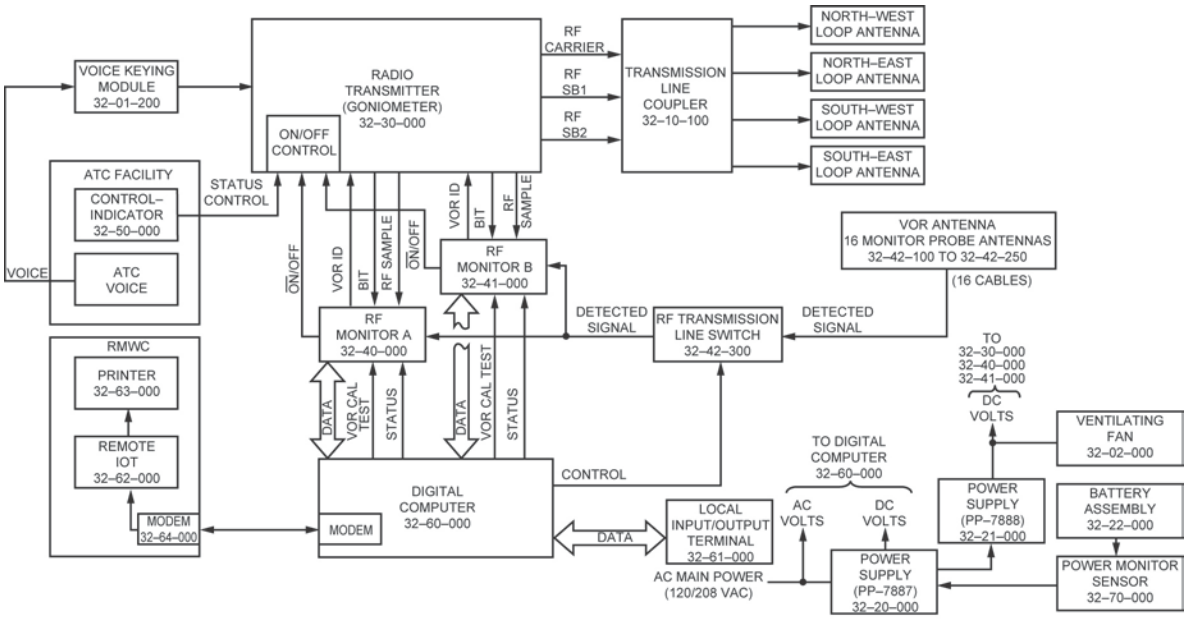

Figure 2–1. VOR system block diagram.

Major areas of the VOR are the transmitter, monitors, local and remote PC and VOR digital computer, system power, battery assembly, and a power monitor sensor,

Transmitter

As previously stated, the VOR transmitter generates a precise and stable composite 25 to 100 W signal using a phase-locked loop for sideband generation. An integral sideband generator (goniometer) produces two sideband output signals, with one leading the other by 90°. ID keying, 9,960-Hz subcarrier generation, and voice processing also provides the total VOR composite signal to the antenna

system. The transmitter signals route through the RF transmission line coupler to the antenna. The antenna is a tunable four-Alford loop array, housed in a walk-in radome located on the VOR shelter roof. The two sideband signals, which we refer to as sideband 1 (SB1) and sideband 2 (SB2), combine with the carrier in space to produce a rotating pattern, which when recovered by aircraft receivers, provides the "variable phase" information necessary. It is also compared to the reference signal to determine the exact aircraft azimuth position. The VOR transmitter receives ON/OFF control signals from the control indicator located at the ATC facility via telephone lines. A separate voice communications interface to the ATC facility allows direct voice modulation of the VOR transmitter from that site.

Monitors

Around the shelter counterpoise are 16 evenly spaced, quarter-wave dipole antennas, which sample the radiated signal and feed it to the transmission line switch. The detected signals route to each monitor, where microprocessors calculate three ground check error parameters: octantal, quadrantal, and duantal. The selected monitor probe antenna samples the transmitter signal by the switch. This detected signal feeds to the monitors for evaluation of signals, such as, RF power, MOD %, ID tone, and so forth. Internal signals, such as, RF SAMPLE and built-in test equipment (BITE) signals feed to the monitors to allow further station evaluation and fault isolation capabilities.

Local and remote personal computer and Very High Frequency Omnidirectional and Radio Range digital computer

The local PC communicates with both monitors by a parallel data bus and the RMWC by telephone lines. Telephone line communication is through modems in the local computer and at the RMWC. A VOR digital computer provides outputs to both monitors for monitor calibration, integrity checks, and fault isolation. Transmitter and other assembly fault signals route through the monitors for processing by software on the local and remote PC.

System power

The system power derives from power supply one, power supply two, the VOR battery assembly, and the interconnection circuit card. Power supply one takes incoming main power from circuit breaker panels and generates 40.5 VDC to trickle charge the battery assembly and power the VOR cabinet supply. As stated earlier, the VOR battery assembly can power the VOR system for at least two hours; the charger can fully recharge the battery assembly in 24 hours. Power supply two converts the input DC from power supply one, or battery voltage, to three DC voltages: +18 volts (V), –18 V, and +9 V. These three voltages post-regulate by three terminal regulators in the VOR monitors and transmitter. A separate switching regulator in power supply two produces the input voltage of 27 V at 20 A for the transmitter modulator assembly.

Battery assembly

The 18 battery cells in the battery assembly are of lead/calcium construction. Each cell provides approximately 2.2 VDC.

Power monitor sensor

The power monitor sensor alerts the ATC personnel when the VOR has lost commercial power and is operating on batteries. It provides surge protection and filtering of the incoming and outgoing telephone lines for both the remote PC and control/status lines. When commercial power is on, the power monitor sensor adds 20 VDC to the control/status lines for the tower, which the control indicator checks for at the tower. If commercial power is lost, the 20 VDC is lost. The control indicator senses this loss and sounds an alarm.

Antenna system operation

The navigational information provided by the VOR is a result of the aircraft's decoding of signals, generated by the transmitter and antenna, to include the space modulation of those signals. The VOR

transmitter produces a carrier and two sideband signals. The carrier and sidebands mix and feed to the antenna at various phases through the transmission line coupler. When radiated, these signals modulate each other in a way that produces a rotating signal with a distinct shape (a limacon pattern) that allows planes to derive their position from the phase and frequency differences of the signal. The carrier signal can range from 25 to 100 W at the station assigned frequency (108–118 MHz). The RF carrier signal is amplitude modulated with up to three audio signals: a 9,960 Hz FM subcarrier with a center frequency of 9,960 Hz +/- 480 Hz that varies at a 30 Hz rate; a 1,024 Hz ID signal normally keyed at a dot/dash rate; and if used, a voice signal supplied by equipment that is normally located in the ATC facility.

As for the sidebands, both generate by combining two frequencies (one exactly 30 Hz above carrier frequency, and one exactly 30 Hz below carrier frequency). Combining these two frequencies produces a double sideband suppressed carrier signal. These signals produce in the transmitter with a constant audio phase difference of 90°.

The VOR antenna has three main sections: the RF-transmission line coupler, a group of four Alford loop elements, and an array of four tunable rods called the vertical polarizer. This antenna is usually located on top of the facility, in the center most part of the roof, surrounded by non-metallic material for best radiation results.

The VOR can also be ground checked by initiating a process from the PC. The VOR ground check system is composed of 16 VOR monitor antennas and a RF-transmission line switch. The VOR monitor antennas samples the output signal at 22.5° intervals. The monitored signal interfaces with the pin-diode switch and is controlled by the switch driver. The switch driver, under the control of the VOR monitors, sends a buffered enabling signal to the pin-diode switch that allows one of the 16 RF monitor probe signals to pass through to the switch output. This output returns to the switch driver where it passes through an adjustable attenuator, followed by an amplifier, a matching transformer, and a peak detector. The output of the peak detector circuit is the amplitude modulated field detector output. Remember that the local and remote PC control various characteristics of the monitors' functions, but the monitor performs the operations.

209. AN/FRN–44A Very High Frequency Omnidirectional and Radio Range station

The AN/FRN–44A VOR station is very similar to the legacy AN/FRN–44 in operational characteristics. For this reason, we will not dig too deep into the theory of operation. The biggest upgrade on this system is the ability to remotely monitor and perform certain aspects of maintenance from a remote data terminal. To start, let's begin this lesson with a system overview.

System overview

As with the original VOR system, the AN/FRN–44A VOR station generates bearing information for aircraft guidance. The VOR system consists of the electronics subsystem, the antenna, the remote status indicator (RSI), the facility central processing unit (FCPU), the uninterruptable power supply (UPS), the flight check radio (FCR), the environmental sensors, and associated communications and interfacing equipment. The station is comprised of two main elements: the shelter and the radome. The shelter houses the electronics subsystem cabinet, the UPS cabinet, and the FCR cabinet. The radome houses the antenna. Refer to figure 2–2 to see a visual representation of these system components.

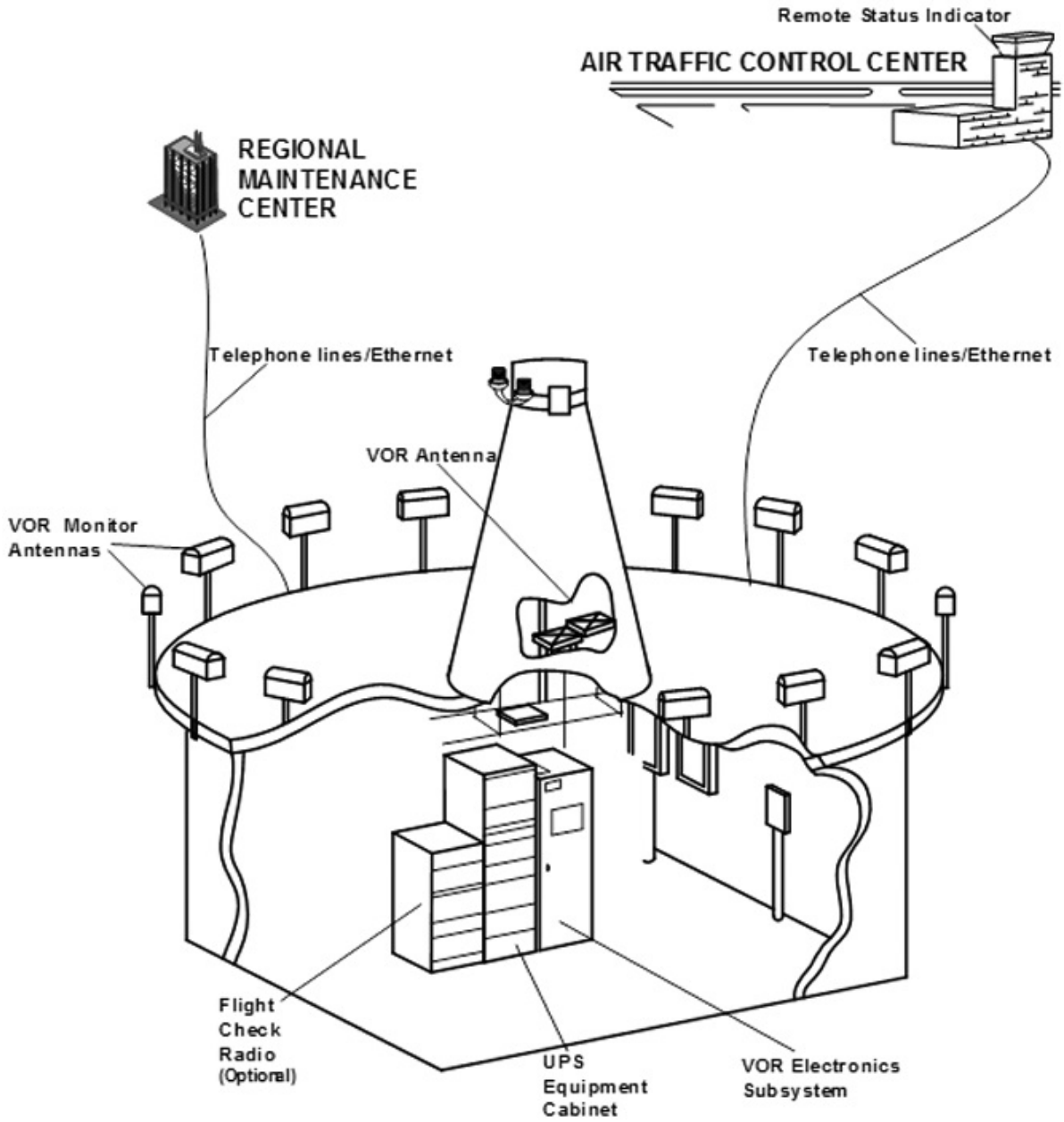

Figure 2–2. AN/FRN–44A VOR station.

Capabilities and limitations

The table below identifies some of the system's most important capabilities and limitations. These specifications are not all inclusive and further information can be found in TO 31R4–2FRN44A–2–WA–1, *Organizational Maintenance Manual with Maintenance Operating and Fault Isolation Instructions – ANFRN44A VOR Navigational Set.*

AN/FRN–44A Capabilities and Limitations	
Specification	**Characteristics**
Power level	Variable from 25 to 100 W, computer controlled
Frequency	108.05 to 117.95 MHz
Frequency stability	±0.001%

AN/FRN–44A Capabilities and Limitations	
Specification	**Characteristics**
Modulation components	9,960-Hz subcarrier 1,020-Hz ID, Voice
Azimuth	Station azimuth adjustable, with a portable maintenance data terminal, from 0.000° to 359.99° in 0.01° increments
Input power requirements	Voltage 230 or 115 VAC root mean square (RMS), 47 to 63 Hz, single phase
System accuracy	Total error spread 1.5° or less (ground check)
Range	200 miles, typical (line-of-sight)
Duty cycle	Continuous
Ambient temperature range	14° F to 122° F; air conditioner/heater must be used in climates which produce shelter interior temperatures outside this range
Ice and snow	2-inch ice coating causes negligible course error
Wind	In excess of 100 mph with Thales shelter on concrete foundation
Antenna RF input impedance	Four coaxial inputs, 50Ω each
Maximum voltage standing-wave ratio (VSWR)	Red and green variable sideband inputs 1.2:1; unmarked reference carrier input 1.15:1
Ground check error	±0.75°

Theory of operation

The VOR station provides bearing information as a horizontally polarized composite signal made up of the carrier frequency (108 to 118 MHz) amplitude modulated by a 9,960-Hz subcarrier (frequency modulated ±480 Hz at a 30-Hz rate) and a double sideband suppressed carrier signal, in which the sidebands are in phase quadrature. The airborne VOR receiver demodulates the signal transmitted by the VOR ground station and displays bearing information relative to magnetic north.

Remote operations

The VOR station is typically controlled and monitored from the regional maintenance center (RMC) with a PC equipped with maintenance data terminal (MDT) software. Technicians in the RMC use the MDT for routine status monitoring and maintenance. They also use the MDT at the equipment site during critical or periodic maintenance. The MDT communicates with the VOR system equipment through the FCPU, which manages all remote status, communications, and control. The shelter contains the modems and Ethernet devices required for FCPU operations and for communicating with the RSI. The RSI is located in the ATC facility and provides status monitoring and system on/off control.

Composite waveform

For an aircraft to derive bearing to the VOR station, the facility must transmit a complex modulated signal that consists of the following components:

- 9960-Hz sub-carrier (frequency modulated ±480 Hz at a 30-Hz rate).
- 30-Hz variable.
- RF carrier.
- Voice.
- ID.

The voice, 30-Hz variable, and 9,960-Hz sub-carrier signals modulate the carrier 30 percent. The ID signal modulates up to 8 percent but is nominally 5 percent. For bearing determination, the aircraft

requires two 30-Hz signals. The 9,960-Hz sub-carrier, which is amplitude modulated on the carrier, provides the reference signal. The rotating figure-eight RF sideband energy and the omni-directional RF carrier energy effectively combines to produce a limacon pattern, rotating at 30 cycles per second, thus providing the variable 30-Hz system signal. The 30-Hz reference is discriminated from the 9,960-Hz sub-carrier. It can serve as a reference signal because its phase does not change with a change in bearing to the station. The airborne receiver compares the phases of the two 30-Hz signals to obtain azimuth bearing to or from the station. Voice is provided to communicate weather and airfield information, and the Morse code provides station ID.

Identification code

Each VOR site has an assigned ID code name composed of up to four letters that are transmitted in Morse code. The Morse code is in the form of a 1,020-Hz tone broken into dots and dashes that are amplitude modulated onto the VOR transmitter carrier frequency. In this application, a dot is 125 milliseconds (ms) long and a dash is 375 ms long. The gap between dots and dashes within a Morse code letter is 125 ms long. The gap between Morse code letters is 375 ms long. The VOR site ID code is transmitted every 7.5 seconds.

Voice signal

Any voice signal may be transmitted by AM of the VOR transmitter carrier frequency. Broadcast weather reports and VOR site information are normal voice communications transmitted to aircraft using the VOR system. Any voice input over telephone lines connected to the VOR cabinet amplitude modulates the composite output by 30 percent. Per International Civil Aviation Organization (ICAO) standards, the voice modulations do not affect (or blank) ID modulations.

Self-Test Questions

After you complete these questions, you may check your answers at the end of the unit.

207. AN/FRN–44 capabilities and limitations

1. How long can the VOR facility operate at full power on backup batteries?

2. What is the frequency range of the radio transmitter?

3. Describe the monitor’s fail-safe operation.

4. What are the ID alarm limits?

208. AN/FRN–44 theory of operation

1. What two signals does the integral goniometer produce?

2. From what device does the VOR transmitter receive on/off control signals?

3. What ground check error parameters do the monitors check?

4. What outputs does the VOR digital computer provide?

5. What three DC voltages does power supply two provide?

6. What three audio signals are used to amplitude modulate the RF carrier signal?

7. At what intervals does the VOR monitor antennas sample the output signal?

209. AN/FRN–44A Very High Frequency Omnidirectional and Radio Range station

1. What two main elements make up the AN/FRN–44A VOR station?

2. What is the typical line-of-sight range for the AN/FRN–44A VOR?

3. What do RMC technicians use for routine system status monitoring and maintenance?

4. What are the five elements that make up the transmitted composite waveform?

5. What is the frequency of the ID signal and how often is it transmitted?

2–2. Tactical Air Navigation System

The TACAN system produces critical signals enabling aircraft to locate the airfield. Besides producing azimuth (bearing) information, the TACAN system also provides the distance to the airfield for inbound aircraft. The plane's position is shown as distance, in nm, from the ground station and as magnetic bearing from the ground station with respect to magnetic north. The TACAN transponder group also gives station Morse code ID. The equipment is designed for fixed station installation and unattended operation with a minimum of logistic support and maintenance.

In this section, we look at the AN/FRN–45 TACAN system characteristics and theory of operation. Afterwards, the different parts of the TACAN signal are deconstructed to see how the overall signal is formed. Lastly, we will describe the AN/FRN–45C TACAN.

210. AN/FRN–45 capabilities and limitations

This lesson describes the technical characteristics of the AN/FRN–45 TACAN system. We do not duplicate the capabilities and limitations from the TO word-for-word, but we highlight items and areas that you might find useful as maintainers. For more detailed information about the system and its components, refer to TO 31R4–2FRN45–2–33GE–1–WA–1, *Organizational Maintenance – General Equipment Description – TACAN Navigational Set ANFRN–45*.

Tactical air navigation technical characteristics

The TACAN transponder group is self-contained and operates in the frequency range of 962 to 1,213 MHz. The TACAN produces a coded pulse train of RF bursts. There is a north reference burst (NRB), auxiliary reference bursts (ARB), ID pulse groups, and squitter pulse group. There are two variable signals: 15 and 135 Hz. The 15- and 135-Hz signals modulate the coded pulse train of pulsed RF at the 15 and 135 Hz rates. When the pulse train is detected and viewed on an oscilloscope, it appears as AM. The bursts transmit at specific points in relationship to the 15- and 135-Hz signals, which appear to make the pattern rotate. The NRB transmits when the radiation pattern is directed east. The aircraft derives navigational information by measuring the time from the reference burst until the next positive crossover of the 15- and 135-Hz variable signals.

The TACAN navigational set is a multi-channel transponder that can provide bearing and distance information for up to 100 aircraft at a distance of up to 200 nm. A local and remote PC and control indicator control the system.

The system as a whole is designed to operate virtually anywhere in the world, from the arctic wastelands to the scorching deserts. The design operates in temperatures ranging from 32° F to 120° F, but under emergency conditions can operate from –40° F to 149° F.

The design of the external components can withstand winds of up to 100 mph with a 1-inch buildup of ice and almost any condition short of a hurricane, tornado, or blizzard. The system can operate at altitudes ranging from sea level to 9,000 feet.

The power output of the TACAN is 3.0 kilowatts (kW) peak. It can operate on 126 different channels in X mode and 126 channels in Y mode, using the broadband antenna. The frequency range is 962 to 1,213 MHz. The interrogation reply delay accuracy is ± 0.25 microseconds (μs). We limit this discussion to the X mode of operation since it is the most prevalent in the AF.

Parameter monitoring

The built-in monitors continuously check system parameters against preset fault limits. The following are parameters that are continuously monitored:

- Antenna scan rate.
- Output pulse rate.
- Pulse spacing.
- Modulation generator (mod gen) status.
- Reply delay.
- Efficiency.
- NRBs.
- ARBs.
- ID.

Each monitor’s central processing unit (CPU) directs its own measurements of the TACAN signal parameters. However, only one monitor controls the system. Each measured parameter is checked against signals originating in the monitor or preset values stored in erasable programmable read only

memory. All measurements are available for display on the local and remote PC. Out-of-tolerance conditions result in the transmitter taken from service.

To fully understand how the monitor functions work, you must realize how each monitor interrogates the transponder. Monitor interrogation pulses originate in the frequency synthesizer, which is programmed by the CPU for the proper TACAN channel. The frequency synthesizer produces a continuous RF wave signal fed to the modulator detector where it is pulse modulated by the driver input from the interrogation trigger generator. The RF feeds to the programmable attenuator where each pulse attenuates to the selected amplitude set by the interrogation trigger generator under control of the monitor CPU. The output of the programmable attenuator travels to the bidirectional coupler and on to the transponder preselector. At the same time, the modulator detector produces a detected envelope of the modulated signal that it uses in conjunction with selected TACAN replies under control of the CPU for various parameter measurements.

Reply delay

Reply delay is the time from monitor interrogation to transponder reply. Each monitor independently interrogates the transponder. Monitor A uses a 100-Hz interrogation rate and monitor B uses 101.5. Each monitor can interrogate the transponder at a rate of 100 to 1,000 times per second. Interrogation rates adjust constantly according to pulse rate information received. Each time the interrogation trigger generator sends out an interrogation pulse, it signals the timing pulse generator to produce an interrogation bracket that is used to detect reply pulses. If there is a reply pulse in this bracket, it is counted. The monitor multiplexer receives the detected sample of the radiated TACAN signal. The monitor multiplexer produces a digital signal with a rising edge coincident with the half-amplitude point of the first reply pulse. This half-amplitude signal processes on the timing pulse generator and travels to the stop output of the master counter. Reply delay is measured using the monitor interrogation pulse as the start pulse and the first reply as the stop pulse on the master counter. The CPU measures the reply delay by reading the count in the 24-bit counter on the timing pulse generator. The monitor constantly updates reply delay, except when it is in monitor bypass.

The normal monitored parameter for reply delay is 50 μs in X mode. The fault limits are +0.4 μs for the upper limit and –0.4 μs for the lower limit.

If this parameter gives a fault on both monitors, check the encoder card in the transponder as this is where the reply pulse is generated and double coded. Also, check the 20 MHz oscillator clock because it sets up the timing. If this parameter gives a fault on only one monitor, check the frequency synthesizer, modulator detector, programmable attenuator, monitor multiplexer, interrogation trigger generator, or timing pulse generator.

Pulse spacing

This is the time between the first and second pulses of a reply to monitor interrogation. It is the same as above, except we use the pulse pair in the reply window. The monitor multiplexer produces digital signals whose rising edges coincide with the half-amplitude points of the reply pulse pair. It sends these signals to the timing pulse generator to initiate the start and stop pulses on the master counter. The CPU reads the count and measures it against the stored value established for the mode of operation. The monitored parameter for pulses of a pair in X mode is 12 μs. Tolerances for these measurements are ± 0.3 to ± 0.5 μs. Pulse spacing readings of more than 2 μs below nominal are indicative of a lack of sufficient reply efficiency to obtain a measurement. Pulse spacing measurements suspend during ID transmission.

If this parameter gives a fault, check the encoder card as this is where the double coding takes place. Also, check the 20-MHz oscillator clock. If there is a problem with the 20-MHz oscillator clock adjustment, the first indication is going to occur with the pulse spacing parameter. Again, if only one monitor gives a fault, check the assemblies mentioned under reply delay.

Efficiency

This is the ratio of detected replies to monitor interrogations. Each time an interrogation pulse sends out, the monitor looks for a reply pulse in the reply window. The monitor multiplexer produces a digital signal with a rising edge coincident with the half-amplitude point of the monitor interrogation pulse and the first reply pulse. These half-amplitude signals process on the timing pulse generator to produce two signals that route to the master counter where they count simultaneously on separate counters for 400 ms. The CPU uses the two counts to find reply efficiency by calculating the ratio between the number of monitor interrogations and the number of received replies. This parameter is adjustable from 50 to 70 percent and is normally monitored at 60 percent. The monitor interrogation level used to obtain this measurement is adjustable through the local and remote PC and is normally set at 3 dB above the transponder's receiver sensitivity setting. The fault limit displayed for this parameter is normally set at 70 percent. Both the efficiency interrogation level and the efficiency fault limit can adjust to accommodate sites with greater than normal traffic load.

Reply efficiency measurements also suspend during TACAN ID transmission. If both monitors indicate a fault in this parameter, check the receiver or programmable echo level alignment. If the receiver or programmable echo level alignment is bad, the lower amplitude pulse may not get processed and sent out as a reply. If the amplitude of the pulse is too high for the receiver, it is not processed and a low efficiency reading results.

Pulse rate

This is the number of transmitter output pulse pairs per second (minus azimuth, reference bursts, and ID pulses). The monitor multiplexer passes all pulses to the timing pulse generator where the pulse rate gating circuit passes only reply and squitter pulses to the pulse rate counter circuits on the master counter. The pulse rate counter starts counting and 200 ms later, it stops the count. The CPU then multiplies this count by five to obtain pulses per second (PPS) and divides it by two to find pulse pairs per second.

Identification presence

ID presence, absence, or steady tone is determined as read from a hardware ID detection circuit. The status displayed indicates "ABSENT" or "PRESENT" on the local PC. Absent is displayed when there is no ID tone during any 75-second period, a continuous tone greater than six seconds, or any ID sequence which is excessively long (eight seconds typical). The present indication is displayed when a normal three- or four-character ID sequence (two to five seconds typical) is transmitted at least every 40 seconds and not more than every 20 seconds (30 seconds typical). The timing pulse generator looks for ID by decoding every selected reply trigger pulse pair. It then initiates a pulse that is delayed by 740 μs. The output of the delay is gated with the input; if there are coincident pulses, the fundamental 1,350-Hz frequency is detected. All ID functions take place on the burst ID sync generator card in the transponder. The most probable cause for an ID malfunction is the loss of site ID from the random access memory (RAM) in the monitor. This is an operator input through the local and remote PC.

Modulation generator status

The mod gen monitors power, phasing, and MOD %. An internal "HARD FAIL" signal within the mod gen goes to the digital azimuth monitor, which then travels to the local PC via the DATA BUS. A "HARD FAIL" status in the mod gen displays as "FAIL" on the local PC. An example of a "HARD FAIL" problem is more than one radiating column failed, producing a bad radiated pattern. A "SOFT FAIL" signal within the mod gen does not send to the local PC. An example of a "SOFT FAIL" problem is low power (displayed as "78" on mod gen) or "one" radiating column failed, degrading the radiated pattern.

North reference burst count and auxiliary reference burst count

A digital representation of the transmitted NRB and ARB pulse trains is analyzed for count and inter-pulse spacing; however, only the pulse count is available for display on the local or remote PC. During this measurement, the digital azimuth monitor card stores a time value of a 20-bit counter for each occurrence of a north or auxiliary burst pulse. The monitor multiplexer feeds a selected reply trigger signal representative of the transmitted TACAN signal during azimuth measurements. The digital azimuth monitor uses the selected reply trigger with a stretched burst gate signal to eliminate replies, ID, and squitters during this measurement time. The digital azimuth monitor counts a 2.5-MHz clock for each burst pulse and stores this 20-bit time value in RAM. At the end of the store cycle, the RAM array contains a 20-bit time value for each azimuth burst pulse in consecutive RAM addresses for use by the CPU. The CPU reads each RAM address for proper spacing and pulse count.

Antenna scan rate

The antenna scan rate calculates from the measured time between north triggers. The north triggers generate in the mod gen and provide in calculating the antenna scan rate. The monitor multiplexer receives the detected radiation signal and processes it for various measurements. Each time a reference burst detects, a pulse generates and travels to the timing pulse generator. The timing pulse generator routes the north trigger count pulse to the master counter where it counts the time and converts it to the antenna scan rate.

Maintenance parameters

In addition to the previously mentioned monitored parameters, knowledge of the following maintenance parameters and their tolerances will ensure your system is operating at peak performance:

- Output power.
- Dead time gate.
- Receiver sensitivity.
- Pulse characteristics.
- Transmitter frequency.

Output power

The peak of the detected RF signal from the transmitter converts to a power measurement. Output power sensed at the output of the TACAN transponder group displays in watts. The maintenance limit displayed for output power is the same as the radiated power monitored parameter. This can adjust by the local and remote PC.

Dead time gate

The dead time gate count and width parameters are measured for accuracy. The width of the receiver dead time gate is displayed in µs. The maintenance limits for this parameter are set to ± 2 µs from the selected value. When TACAN calibration modes one through eight are selected, the dead time gate width is replaced with dead time gate count, which is indicative of the number of aircraft and/or monitor interrogations being decoded per second. Maintenance limits for the dead time gate count do not exist. They will not display when in the calibration mode. The dead time gate detects on the monitor multiplexer and is sent to the timing pulse generator for processing. From there, it travels to the master counter where used as a count pulse for decoded interrogations.

Receiver sensitivity

The monitor automatically performs repetitive efficiency measurements at varying interrogation levels to determine receiver sensitivity. The sensitivity of the receiver is displayed in negative decibels referenced to a 1-milliwatt standard (dBm) for on-channel and off-channel (± 200 kHz, ± 900 kHz) interrogations. The sensitivity level is defined as the interrogation level at which 70 percent

replies transmit. Sensitivity measurements on each of the five test frequencies are made on a rotating basis. Thus, only one measurement changes at any given time and may require as much as 45 seconds to update when a large change in receiver sensitivity is expected. The maintenance limits displayed for on-channel and ± 200 kHz are set to 3 dB above the receiver sensitivity setting. The monitors are capable of measuring sensitivity in the range of –30 to –110 dBm only. Thus, a reading of –30 dBm implies –30 dBm or less sensitivity as is normally displayed for ± 900 kHz sensitivity measurements. The upper maintenance limit for sensitivity is always –30 dBm.

Pulse characteristics

The rise time, width, and fall time of the transmitted Gaussian pulse is measured. The width is measured between the leading and trailing 50 percent points on the video detected from the final RF output. The rise and fall time are measured between the 10 percent and 90 percent points on the leading and trailing edges of the same video signal. The monitor multiplexer detects the incoming signal and sends it to the timing pulse generator. The timing pulse generator digitizes the 10 percent, 50 percent, and 90 percent rise and fall points on the selected reply pulse. Once these points are digitized, they are sent to the master counter for further processing. The master counter counts at a 20-MHz rate to load a 24-bit time count for each of these pulse characteristics. The CPU then reads the information from the 24-bit time count.

Transmitter frequency

The period of a divided down RF sample is measured to determine the transmit frequency. The monitor multiplexer receives a sample of the transmitter frequency synthesizer output directly. It passes it to the master counter that counts the frequency and loads the 24-bit counter with a data word and read by the CPU.

Transponder

The transponder is a key assembly in the TACAN. It receives the aircraft interrogations, sends out replies, and generates the components that make up the radiation pattern. The transponder outputs obey a priority of transmission known as auxiliary (azimuth), identification, distance, and squitter (AIDS).

1st priority—NRB and ARB pulse pairs (azimuth).

2nd priority—ID and equalizer pulse pairs.

3rd priority—Distance reply pulse pairs.

4th priority—Squitter pulse pairs.

In X mode, the transponder pulse codes each pulse pair with a space of 12 μs. The north reference azimuth group in X mode consists of 12 pulse pairs (12 μs between pulses of a pulse pair) spaced 30 μs apart. The auxiliary reference group in X mode consists of six groups of 12 μs pairs spaced 24 μs apart. The overall output is one north group and eight auxiliary groups every 66.66 ms, this will be covered in more detail later.

Power supply

The power supply provides four output voltages: +65 VDC, +17.5 VDC, –17.5 VDC, and +10 VDC. The regulated +65 VDC is over current and over voltage protected and shuts down the transponder in the event of a malfunction.

211. AN/FRN–45 block diagram and theory of operation

In this discussion of the AN/FRN–45 TACAN, look at the overall system block diagram (fig. 2–3). Pay special attention to how the assemblies interact. You will soon be able to look back at this lesson to help get the “big picture” and tie all the system components together. We will begin by going over the transponder group functions.

Transponder group functional operation

The transponder group's function is to receive, decode, and process aircraft interrogations. It then transmits coded replies containing azimuth and distance information and station Morse code ID. The system provides for remote maintenance monitoring, transmitter control, fault diagnostics, and fault isolation to include a display of the most probable defective assemblies.

Receiving and transmitting

The antenna routes aircraft interrogations to the TACAN via the ANTENNA IN/OUT line. The radio frequency amplifier (RFA) applies the aircraft interrogation signal to the transponder as INTERROGATIONS. The transponder decodes and processes the interrogations. It produces the coded 400W RF DRIVE reply pulses for the RFA. This action amplifies the drive signal to the 3 kW peak. The RFA internal circulator and directional coupler apply the final 3 kW output to the antenna on the ANTENNA IN/OUT line. The system generates station Morse code ID when it receives a VOR KEY INPUT in the VORTAC configuration, or independently if the VOR KEY INPUT signal is lost or for a TACAN-only configuration. The VOR KEY INPUT routes to the transponder, which, in turn, routes the signal to RF monitors A and B. The primary monitor (normally monitor A) generates a station Morse code ID in response to the VOR KEY INPUT signal, which goes to the transponder via the SERIAL INPUT DATA. If the VOR KEY INPUT is not received within 32 seconds, the monitor begins independent TACAN ID Morse code keying.

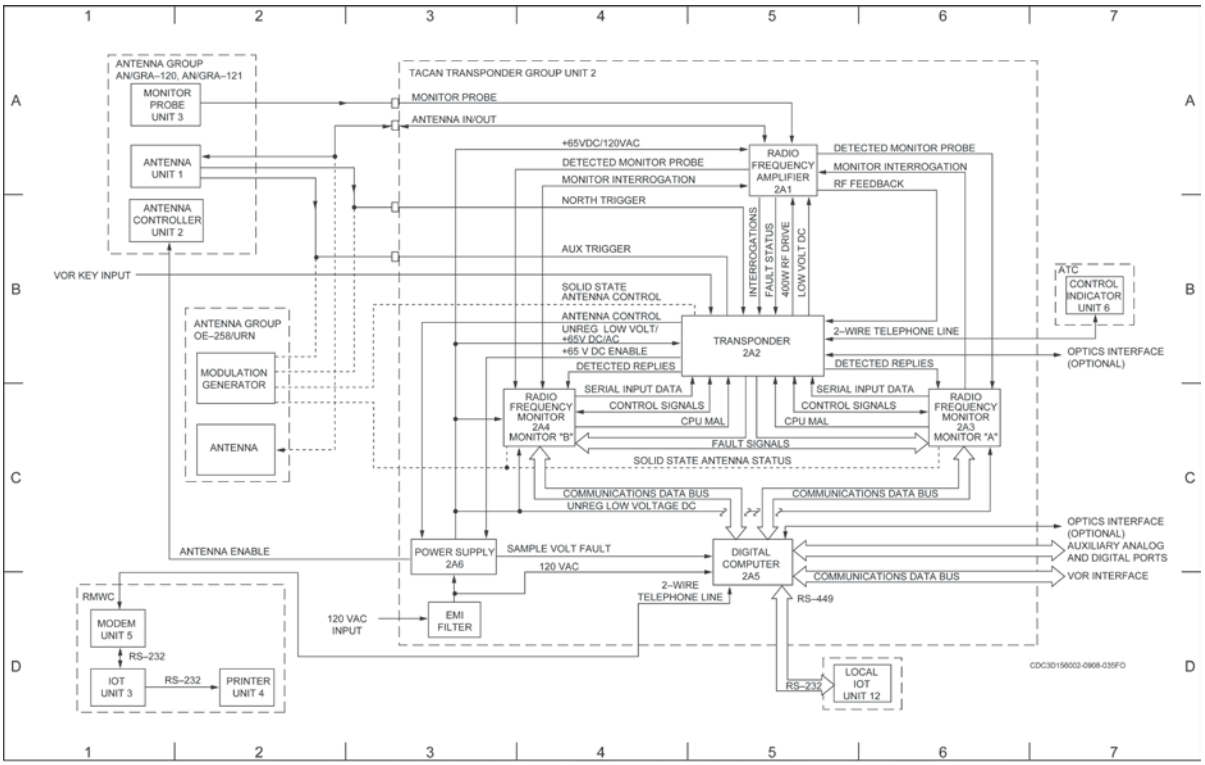

Figure 2–3. TACAN transponder group block diagram.

Monitoring

The TACAN monitored, and maintenance parameters are constantly checked by monitors A and B. Each monitor independently generates MONITOR INTERROGATION (test interrogations), which are coupled into the transponder INTERROGATIONS input via the RFA. The transponder receives, decodes, and processes the test interrogations, in addition to aircraft interrogations and produces coded reply pulses to the monitor and aircraft interrogations. A sample (RF FEEDBACK) of the transmitted signal detects in the RFA and routes to the transponder. It is then buffered and sent to the monitors as DETECTED REPLIES. The monitors check this signal for characteristics such as pulse

spacing, reply delay, reply efficiency, pulse rate, ID, azimuth bursts, and pulse characteristics. The monitor also controls the overall system reply delay.

Transmitter control

Control of TACAN system adjustments and independent monitor closed loop operational control is provided by only one monitor—normally monitor A. If a malfunction (not a parameter fault but an internal monitor failure) occurs in monitor A, or if power is off in monitor A, control switches to monitor B. This happens in the transponder by selecting the SERIAL INPUT DATA and CONTROL SIGNALS from one monitor or the other, depending on the state of the CPU MAL signal from monitor A. The status of this line determines the controlling monitor. A subsequent malfunction of monitor B automatically removes the transmitter from service. Both monitors must detect a fault or fail for the TACAN to shut down.

Fault status

The operational status of the individual assemblies in the RFA and transponder goes to the monitors via the FAULT SIGNALS status signals. The monitors use these signals to help determine the faulted assemblies if the transponder or RFA malfunctions. The monitors initiate fault diagnostic routines and report the analysis results via the COMMUNICATIONS DATA BUS for further processing and display on the local and remote PC.

Local and remote personal computer

Parameter data and TACAN system level adjustments are collected and transferred between the local and remote PC and the monitors via the COMMUNICATIONS DATA BUS. Monitored and maintenance parameters are displayed, and operators make entries through the local and remote PCs. The local PC connects to the TACAN monitors. Communication to and from the remote PC are over a standard voice grade telephone line via a modem in the local PC. A hard copy of the monitored and maintenance parameters can be printed. System parameters such as dead time gate width, receiver sensitivity, and reply efficiency settings are stored in the battery-backed RAM in the monitors. This allows the TACAN to remain in operation if the local and remote PC has a malfunction.

Remote control and status

The control indicator provides remote control and TACAN status information to the ATC facility. Normal, alarm, and bypass status information is displayed and transmitter on/off control is available. Communications go through fiber, standard voice grade telephone lines, or two-wire telephone lines.

Power supply

Continue referring to figure 2–3. The power supply provides power for the TACAN. The 120 VAC input flows through the electromagnetic interference (EMI) filter. The EMI filter prevents electromagnetic noise, generated by the TACAN, from reaching the power supply. The power supply converts the 120 VAC input to regulated +65 VDC for the transponder and RFA amplifiers, unregulated +10 VDC, –17.5 VDC, and +17.5 VDC for the monitors and transponder post regulator supplies, and 120 VAC for the system fans. The transponder returns the +17.5 VDC to the power supply as the +65 VDC ENABLE signal. The +17.5 VDC returns through the transponder front panel power switch to shut down the +65 VDC when the transponder shuts off. Sample power supply voltages (SAMPLE VOLT FAULT) travel to the local PC for use in fault diagnosis and detection.

OE–258 Antenna group

In addition to providing the NORTH TRIGGER and AUX TRIGGER, the OE–258 receives SOLID-STATE ANTENNA CONTROL from the transponder and produces SOLID-STATE ANTENNA STATUS for the monitors. The control lines tell the antenna mod gen what frequency range the transmitted signal is in, define the power operation range, and allow clearing of the hard fail status in the mod gen. The SOLID-STATE ANTENNA STATUS tells the monitors that a solid-state antenna is present, and indicates if a soft fail, hard fail, or clock-fail condition exists.

212. Tactical air navigation signal characteristics

In this lesson, we discuss the principles of TACAN from the standpoint of analyzing the signals processed and developed within the ground station. We first review the TACAN signal characteristics, followed by an analysis of the signals used with the bearing feature. Next, we discuss the DME features of the system, and finally the TACAN antenna, the radiation pattern, and the antenna control group.

Analyzing tactical air navigation signals

The TACAN uses pulse coding to increase the peak-radiated power, to increase the signal-to-noise ratio, and to discriminate against radiated interference. It does this by transmitting characteristic pulse groups with prearranged spacing between component pulses of the group.

The TACAN has two modes of operation: X mode and Y mode. Interrogations in X mode are uniquely identified by the 12 µs spacing between the two pulses of a pair. As we stated earlier, we limit the text to the X mode only, since this is the most common mode for the AF. Remember, the 12 µs spacing (X mode) between pulses allows the aircraft to distinguish between signal pulses from the TACAN and any other pulses that may be present on the received RF. The number of pulse pairs per second and the spacing between pulse pairs—the spacing between the leading edges of the first pulses of successive pairs—depends on the particular signal element and is a characteristic of that particular signal element.

Tactical air navigation signal elements

The following are the elements that compose a TACAN signal:

- NRB.
- ARB.
- ID code.
- DME interrogation replies.
- Squitter (noise) pulses.

Figure 2–4 is a composite illustration of the signal elements; it shows how each signal fits into the overall pulse train. Refer to it frequently as you study the following material.

North reference burst

The NRB consists of 12 pulse pairs with 12 µs spacing between pulses of a pair and 30 µs spacing between pulse pairs. The NRB occurs at a rate of 15 times per second.

Auxiliary reference burst

The ARB consists of 6 pulse pairs with 12 µs spacing between pulses of a pair and 24 µs between pulse pairs. There are 8 ARBs per revolution or 120 per second.

Identification code

The ID code consists of basic and equalizer pulse pair groups with 12 µs spacing between pulses of a pair. The basic and equalizer pulse pair groups are separated by 100 µs. The ID generates once approximately every 30 seconds and is approximately 5,400 PPS for the purpose of this training product. The ID replaces the DME/squitter pulses since it has a higher priority.

Distance measuring equipment interrogations and replies

The DME signal element consists of pulse pairs with 12 µs spacing between pulses of a pair. The spacing between pulse pairs generates randomly, thus making it peculiar to the individual interrogating aircraft.

Squitter (noise) pulses

These pulses consist of random pulse pairs with 12 µs spacing between pulses of a pair. The number of pulse pairs per second depends on the number of interrogations the TACAN receives, with a minimum spacing of 60 µs between pulse pairs and none generated between 720 and 780 µs spacing ID. The squitter is equal to 2,700-DME x 2 or approximately 5,400 PPS (fig. 2–4).

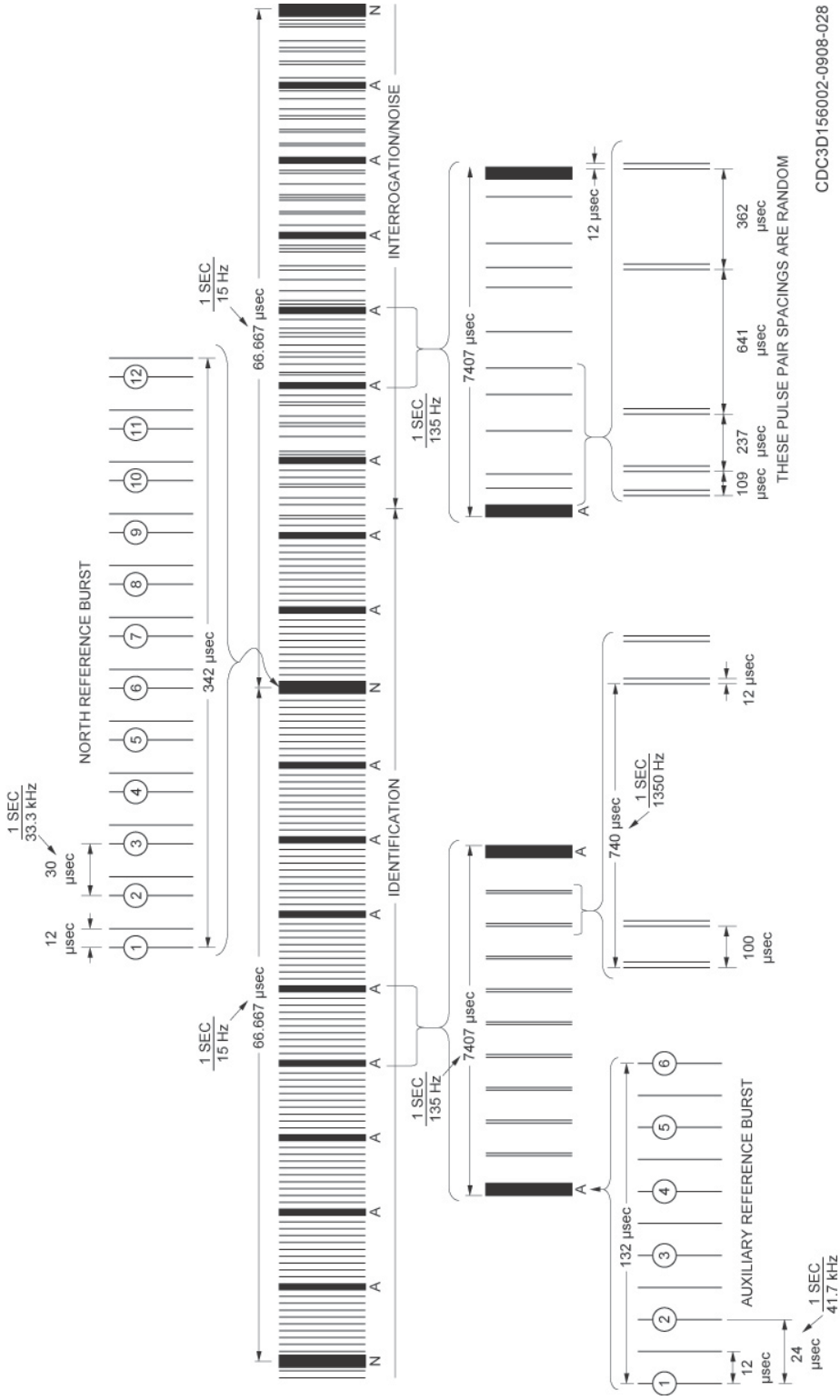

Figure 2–4. Breakdown of TACAN output pulse train.

Tactical air navigation duty cycle

To sustain the sine wave modulation envelope of the transmitted RF energy, the total number of pulse pairs transmitted per second must remain constant. The TACAN system keeps a constant duty cycle output by introducing into the coded pulse train enough noise pulses to keep the total number of pulse pairs transmitted at 3,600 pulse pairs per second or 7,200 PPS. These noise pulses (generated in the 2A2A6 decoder and 2A2A8 encoder) are called squitters. The pulse pair repetition rates for ground station signal elements are computed in the next table.

Pulse Pair Repetition Rates for Ground Station Signal Elements		
Signal Element	**Pulse Pairs**	**PPS**
NRB (12 pulse pairs times 15 Hz times 1 trigger)	180	360
ARB (6 pulse pairs times 15 Hz times 8 triggers)	720	1,440
Squitter/DME or ID	2,700	5,400
Total pulse count	3,600	7,200

All of these repetition rates are constant with the exception of the squitter and DME signal. Squitter pulses are introduced into the system to keep the transponder output at the level that would be generated by the average interrogations of about 100 aircraft. Thus, forcing the transmitter section to operate as if constantly interrogated by 100 aircraft. This constant duty cycle reduces drift in tuned circuits and simplifies the power supply design by assuring constant current drain on all circuits. The most important result is pattern stability. When the duty cycle falls because pulses are missing, “holes” appear in the output pattern. Additionally, the 135-Hz modulation becomes more difficult for the airborne receiver to detect, making azimuth determination less accurate. The loss of squitter pulses is a likely cause of holes in your pattern.

Distance measuring equipment signal characteristics

DME is an outgrowth of radar ranging techniques that measure distance by measuring the round trip travel time of radio pulse signals. With DME, digital readouts in the aircraft, not displays on radar, show the distance information.

In figure 2–5, notice how the DME signal flows among the major units of the TACAN system. The airborne transmitter repeatedly sends out very narrow, widely spaced, interrogation pulses. These pulses are received by the ground station, where the receiver triggers the associated transmitter into sending reply pulses back to the aircraft. Timing circuits in the airborne receiver automatically measure the round trip travel time (the interval between the interrogation and reply pulses), and convert it into electrical signals that operate the distance meter in the aircraft.

In operation, a number of aircraft that are in the vicinity and tuned to the local channel may simultaneously interrogate the same ground station. The ground station replies to all interrogations and each aircraft receives the total replies to all aircraft. Since the interrogation pulse spacing from the aircraft is random, the TACAN transponder processes and transmits the reply with the same spacing as was originally sent by the interrogating aircraft. The aircraft in the vicinity can recognize their own replies by the pulse spacing between pair groups.

The interrogation pulses transmitted by the airborne equipment are in the familiar pulse pair sequence, with pulses of a pair separated by 12 ± 0.5 µs. This twin pulse technique allows a greater average radiated power and also makes the system less susceptible to interference from radar equipment or other sources of RF energy. Coincidence type circuits that respond only to pulse pairs with a prearranged spacing perform pulse pair decoding. Because of this, interference pulses rarely have the correct spacing to pass the coincident decoder circuits.

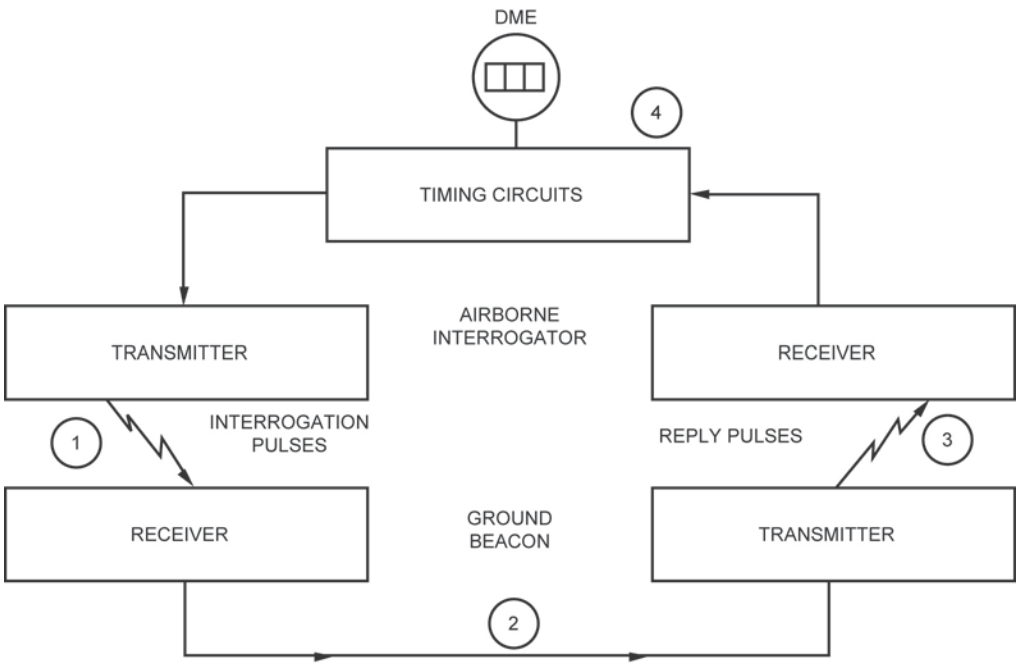

Figure 2–5. DME operating principles.

Co-channel interference between TACAN stations decreases by not assigning identical frequencies to ground stations that are within interference range of each other. For TACAN, this distance is about 400 miles. TACAN has an important advantage over most other navigational systems in its ability to overcome interference. This advantage arises from the fact that it uses low-duty cycle pulse transmissions. The signals from two stations on the same frequency do not cause interference. Only the stronger of the two frequencies has any effect on the airborne receiver. The weaker signal rejects almost totally. Consequently, the airborne equipment displays the accurate distance and bearing from the nearer or stronger of the two stations.

Tactical air navigation antenna group components

The antenna group consists of a solid-state antenna and a mod gen. These units are responsible for the following:

- Receiving interrogations from aircraft.
- Modulating the antenna pattern with 15 Hz and 135 Hz information.
- Providing bearing reference trigger pulses to initiate the generation of the NRBs and ARBs.
- Radiating the transponder output signals that the aircraft receives and processes to get distance and bearing information.

OE–258/URN antenna

The OE–258/URN TACAN antenna is a solid-state electronically rotating antenna. The antenna has no moving parts. It uses 36 circularly arranged stationary feed horn columns and a mod gen. By electronically rotating the minimum/maximum transmitted signal from one column to the next in a clockwise direction at 900 revolutions per minute (15 Hz), the antenna produces a radiation pattern having the appearance of a rotating “scalloped cardioid.” It also contains the 15- and 135-Hz modulation components. By using a non-moving antenna, the AF saves both on replacement parts and system downtime. The antenna assembly consists of four major functional areas—the power divider, the azimuth feeds, the vertical columns, and the multiplexer.

Power divider

The power divider assembly receives the main 3,000 W output from the TACAN equipment rack. It splits the 3,000 W signal into three equal parts and sends it to the azimuth feed assemblies. The power divider also acts as a bi-directional coupler. It passes aircraft interrogations back to the TACAN transponder.

Azimuth feeds

These three assemblies working in conjunction with each other are the combining point of the TACAN radiated signal. The pulse modulated signal RF from the power divider and the controlling signals from the mod gen come together to produce an amplitude modulated pulsed RF signal that is sent to all 36 columns at the same time to produce a “one instant in time” transmission. The mod gen is a computer, which controls the AM in the azimuth feeds. It does so in such a way that the column outputs are constantly changing so it appears that the antenna is rotating at 900 revolutions per minute. Again, as with the power divider, these azimuth feeds are bi-directional couplers for the aircraft interrogations.

Vertical columns

These 36 stationary columns are arranged in a circle. Each column has 12 feed horns or radiators that are stacked on top each other. Each column receives its signal from one of 36 outputs from the azimuth feed section and transmits that portion of the signal into space. Do not forget about the incoming aircraft interrogations that are entering the radiators and going back to the azimuth feeds.

Multiplexer

The multiplexer receives 36 detected outputs (one from each vertical column). The test column addresses and enables input signals from the mod gen CPU and selects which sample returns to the CPU at the ANT COMPH output. This assembly mounts in the power divider assembly.

Rotating the pattern

Pulsed RF from the TACAN transponder applies to the 3-way power divider, which, in turn, supplies the three 12-way azimuth feeds. This provides a 36-way split of the pulsed RF to feed the 36 arrays in the vertical columns. Each of the 36 outputs is amplitude modulated by pin diodes located in the three azimuth feed assemblies. The modulation consists of 15- and 135-Hz frequency components with specific modulation indices and phase relationships. The modulation voltages supply to the pin diodes by the mod gen.

Modulation generator

The mod gen makes the NRB and ARB triggers, which uses them to produce the NRBs and ARBs in the transponder, the 15- and 135-Hz modulation, and causes the radiation pattern to appear to rotate. Let’s take a look at its major assemblies. The MG–100B mod gen consists of the motherboard, front panel, operator interface, microprocessor, column driver, remote monitoring printed circuit board, and the power supply.

Motherboard

This assembly acts as a collection point for all of the other assemblies. No signals generate within, but most flow through the motherboard. Most of the assemblies in the mod gen either plug into it directly or are connected to it. Outputs to the antenna and TACAN equipment rack are located at the back of the assembly and test connectors are located on the front for easy access outside of the main equipment cabinet.

Front panel

This assembly mounts directly to the back of the front plate. It has 19 individual LED for displaying both normal and abnormal conditions. It has a piezo element for an audio alarm and numerous switches for control and testing purposes. Two 7 segment LEDs are used to display system status.

Operator interface

This assembly consists of numerous status buffers and control latches. These devices act as input and output gates for the CPU data bus. Signals leaving the latches destined for the front panel route through LED drivers, which increase the current to an acceptable level and power the display LEDs. Status buffers connect to the manual thumb wheel switches that produce the north and BITE offsets used by the CPU. These switches provide a four-bit binary code that minimizes system peak error and are set during flight check. Incorrectly setting these switches greatly affects the bearing information provided to aircraft.

Microprocessor

The microprocessor assembly consists of the following four main functional areas:

1. System clock and trigger circuits.
2. Microprocessor and associated components.
3. TRIGGER, BITE, and DIGITAL DRIVE generators.
4. Analog circuits (system condition and verification).

The microprocessor is the main card in the mod gen and is central to the control and production of the needed signals that are responsible for the radiated TACAN pattern. It is the only card in the mod gen that requires alignment. There are seven individual adjustments. One is factory set, three are set up using a voltmeter, and three adjust using an oscilloscope. This means that the alignments of the solid-state antenna group are minimal and accomplished in less than 30 minutes. Maintenance, repair, and troubleshooting to the line replaceable unit level can greatly reduce downtime if the replacement assembly is available.

Column driver

The column driver produces the control signals that eventually amplitude modulate the pulsed RF carrier in the antenna. A digital to analog converter under the direction of a clocked programmable read-only memory chip on the CPU card produces one of 36 voltage levels that directs to one of 36 amplifiers via three analog de-multiplexers. The outputs of the amplifiers go directly to the pin diodes in the azimuth feeds. Each voltage produced by the composite sample digital/analog (D/A) converter is compared to an ideal BITE value by selecting one of 36 outputs from the analog multiplexers. Any difference between the azimuth driver signals and the ideal values from the BITE D/A converter causes an individual column error.

Power supply

The power supply is a completely sealed unit that provides +5 volts regulated DC and ±15 volts regulated DC to the mod gen. It normally operates on 115 VAC input power but can operate on 220 VAC input power utilizing the special configuration options built-in to the front panel.

213. AN/FRN–45C Tactical Air Navigation System

The AN/FRN–45C TACAN system is very similar to the legacy AN/FRN–45 in operational characteristics so we will not dig too deep into the theory of operation. The biggest upgrade on this system is the ability to remotely monitor and perform certain aspects of maintenance from a remote data terminal. This lesson starts by providing a system overview.

System overview

The AN/FRN–45C TACAN navigational set is a multi-channel transponder system that provides bearing and distance information to aircraft for up to 200 nm. The TACAN system is comprised of the TACAN beacon, antenna, ATC facility remote status and control equipment, FCPU, UPS, FCR, environmental sensors, and associated communications and interfacing equipment.

Figure 2–6 shows the relationship of assemblies in the system. The TACAN is typically controlled and monitored from the RMC with a PC equipped with MDT software. Technicians in the RMC use

the MDT for routine status monitoring and maintenance. They also use the MDC at the equipment during critical or periodic maintenance. The MDT communicates with the equipment through the FCPU, which manages all remote status, communications, and control. The TACAN shelter contains the modems and Ethernet devices required for FCPU operations and for communicating with the RSI. The RSI is in the ATC facility and provides status monitoring with a system ON/OFF function.

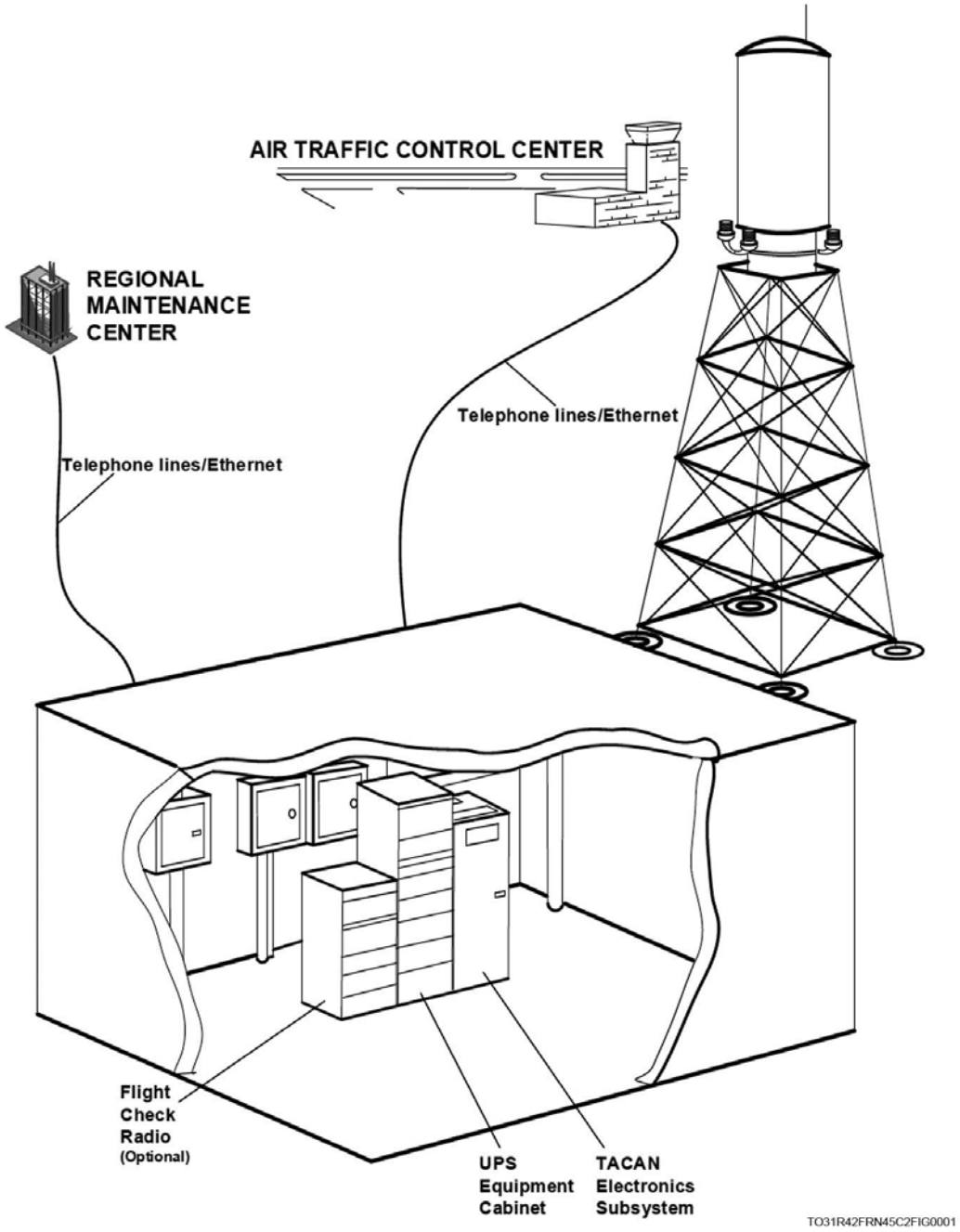

Figure 2–6. Typical AN/FRN–45C facility and equipment location.

Capabilities and limitations

The following table identifies some of the system's most important capabilities and limitations. These specifications are not all inclusive and further information can be found in TO 31R4–2FRN45C–2–WA–1, *Organizational Maintenance Manual with Maintenance Operating and Fault Isolation Instructions – ANFRC45C TACAN Navigational Set*.

AN/FRN–45C Capabilities and Limitations	
Characteristics	**Specifications**
Power output	3.5 kW peak
Frequency	962 to 1213 MHz
Frequency stability	±0.0015%
Channel capacity	126 channels
Bearing and distance	200 nm (line of sight)
Distance	100 aircraft (when in constant duty cycle mode) 200 aircraft (when in variable duty cycle mode)
Range	200 miles, typical (line-of-sight)
Commercial power	230 VAC, 50 Hz
Ambient temperature range	14° F to 131° F; normal operation of entire TACAN facility
Ice and snow	1-inch of ice load (antenna only)
Wind	100 mph
Altitude	Sea level to 9000 feet

Theory of operations

The TACAN group is a multi-channel unit whose purpose is to provide bearing and distance information up to 200 nm (line of site distance) relative to the ground location. A transceiver installed in an aircraft transmits interrogation signals and then waits for a transmitted reply from the transponder. The time between interrogation and reply is used to determine range. Space modulation of the antenna pattern is used to determine aircraft bearing. Approximately 100 aircraft may use the transponder at the same time.

Channel characteristics

There are 126 TACAN channels in each of two modes, "X" and "Y." Adjacent channel frequencies are in 1 MHz steps between 962 MHz and 1,213 MHz. For each received frequency, there is an assigned transmit frequency 63 MHz away.

In X mode, the receive frequency range is between 1,025 MHz and 1,150 MHz with the transmit frequency 63 MHz *lower* (between 962 MHz and 1024 MHz) for low band and 63 MHz *higher* (between 1,151 MHz and 1,213 MHz) for high band. As stated before, our lesson will focus on X mode since it is the most prevalent mode in the AF.

Nominal reply delay

Each beacon is identified by means of its channel frequency, pulse coding, and identity signal. The ground beacon introduces a fixed delay between the reception of interrogating pulses and the transmission of the corresponding reply pulses. This fixed delay, called main delay or fundamental delay, is introduced so an aircraft flying very close to the beacon can complete transmission of the encoded interrogating pulse pair. The aircraft's system then deactivates its own transmitter before its receiver begins receiving the corresponding beacon reply pulses. To minimize the effects of interfering signals, the system transmits pulse pairs instead of single pulses; each pair includes two 3.5 µs pulses 'whose spacing depends on the channel mode selected.

Interrogations

Interrogation signals to the navigational set are in the form of coded pairs of pulses. X mode has a 12 µs spacing between interrogation pulses.

Distance measuring equipment

Replies to interrogations (distance reply) are delayed 50 µsec (X mode) in the radio transponder and are in the form of coded pairs of pulses. These distance reply pulses are inserted into a continuously transmitted pulse train.

Antenna

The electronically scanned antenna provides all-band, all-terrain service. It produces an electrically scanned radiation pattern that is developed by modulating the RF pulsed radiation from the TACAN transponder with 15- and 135-Hz modulating frequencies. The 15-Hz modulating frequency creates a single lobe limacon pattern. The 135-Hz modulating frequency creates nine minor lobes, on the limacon pattern, with each spaced 40 degrees apart.

The radiated pattern is a limacon with nine superimposed minor lobes, which remain fixed relative to the limacon. The pattern is rotated clockwise around the ground station at a 15-Hz rate. The TACAN modulation is achieved by electronically biasing two rings (inner and outer) of parasitic elements within the TACAN antenna. The inner ring consists of 12 elements and produces the 15-Hz modulation. The outer ring consists of 36 elements and produces the 135-Hz signal.

The TACAN antenna electronics sequentially bias diodes in the parasitic elements between on and off states. When the diodes are on, the element reflects the radiated signal. When the diodes are off, the element is invisible to the signal radiated by the center antenna array. The varying of the RF signal strength, produced by electronic rotation from the modulating signals, is calibrated in time with reference bursts produced by the TACAN. The aircraft can detect the varying of the signal strength transmitted within the range of the ground station.

Self-Test Questions

After you complete these questions, you may check your answers at the end of the unit.

210. AN/FRN–45 capabilities and limitations

1. What is the TACAN’s frequency range?

2. The TACAN can provide bearing and distance information for how many aircraft?

3. List the TACAN parameters that are continuously monitored.

4. Describe reply delay.

5. What is the normal monitored parameter for reply delay in X mode?

6. What term describes the time between the first and second pulses of a reply to monitor interrogation?

7. Define the term “efficiency” in TACAN parameter monitoring.

8. Where do all transponder ID functions take place?

9. What code does the mod gen front panel display when the TACAN has a “SOFT FAIL” problem for low power?

10. List the five maintenance parameters of the TACAN.

11. What is the relationship between the maintenance limit displayed for output power and the radiated power monitored parameter?

12. What transponder outputs have the highest priority of transmission?

13. Describe the X mode north reference azimuth group.

14. What four outputs does the power supply provide?

211. AN/FRN–45 block diagram and theory of operation

1. What does the RFA do with the 400 W RF DRIVE?

2. What component generates the station Morse code ID?

3. What component controls the overall reply delay?

4. What is the purpose of the EMI filter in the power supply?

5. What information do the SOLID-STATE ANTENNA STATUS lines provide?

212. Tactical air navigation signal characteristics

1. What is the pulse pair spacing for X mode?

2. What parts make up the pulsed output of the TACAN? How many PPS comprise each signal?

3. What is the result when the duty cycle falls because pulses are missing?

4. How does any interrogating aircraft recognize its reply from the replies to the other aircraft in the area?

5. What is the principal method used to minimize co-channel interference?

6. List the functions of the antenna group.

7. What is the purpose of the mod gen?

8. What is the only card in the mod gen that requires alignment?

213. AN/FRN–45C Tactical Air Navigation System

1. Name the eight elements that make up the AN/FRN–45C TACAN.

2. What system component manages all remote status, communications, and control?

3. What is the peak output power of the AN/FRN–45C TACAN?

4. Approximately how many aircraft may use the transponder at the same time?

5. What is the frequency range for the AN/FRN–45C TACAN?

6. What is the spacing between interrogation pulses in X mode?

7. Describe how the antenna electrically scanned radiation pattern is developed?

2–3. Very High Frequency Omnidirectional and Radio Range Tactical Air Navigation System Equipment Configurations

In this section, we discuss the parts of the AN/FRN–43 VORTAC facility and how the two systems integrate to give navigational information. This section introduces the VORTAC equipment configurations and concludes with a quick description of the newer FoS system.

214. AN/FRN–43 Very High Frequency Omnidirectional and Radio Range Tactical Air Navigation System facility components and layout

As the name suggests, the VORTAC system consists of a collocated VOR and TACAN system as shown in figure 2–7. The VOR and TACAN systems operate independently and may be installed as a VOR, TACAN, or VORTAC facility. The VOR and TACAN cabinets are housed in an environmentally controlled structure, with their respective antennas mounted above the shelter. The shelter houses equipment to generate, radiate, and monitor the TACAN and/or VOR composite waveforms. The local PC, which is located in the equipment shelter, controls VORTAC operations and parameters, and enables the RMWC to communicate with the equipment. The local and remote PC works with the VOR and TACAN to provide control, fault diagnostics, and parameter adjustment capabilities. Both the VOR and TACAN independently communicate through telephone lines to the remote control unit in the ATC facility. After this short introduction, we begin this lesson by discussing the major components of the VOR system.

Major Very High Frequency Omnidirectional and Radio Range system components

Figure 2–8 shows the VOR transmitter group 1. It contains the VOR test generator 1A2, radio frequency monitors 1A3 and 1A4, radio transmitter 1A5, power supplies 1A6 and 1A7, and the ventilating fan 1A8. Now, let’s discuss the purpose of each of these major VOR assemblies.

Test generator (1A2)

The purpose of the VOR test generator, sometimes called the digital computer, is to produce a perfect representation of the modulated signals of the VOR for monitor alignment. It produces a digital version of all of the VOR intelligence then converts them into analog signals. These signals are not used at all during normal operation; they are only routed to the monitors (via digital computer commands) during maintenance.

Radio frequency monitor (1A3 and 1A4)

The RF monitor is a microprocessor-based system that measures and checks VOR signals against established parameters. It also monitors the automatic ground check system that ensures optimum pattern alignment. When they detect a fault, the monitors collect fault isolation data that is further processed. After completion of the diagnostic test, the monitors decide whether or not to shut down the VOR by disabling the transmitter. The monitors serve as the communication and control link between the local and remote PC and the VOR. These monitors are identical and housed in the same

drawer yet operate independently of each other. Both monitors are responsible for automatic transmitter on/off, system fault detection, and VOR fault isolation.

Radio transmitter (1A5)

The radio transmitter generates the carrier RF, sideband 1 RF, and sideband 2 RF that is radiated by the antenna to become the VOR composite RF signal. Audio modulation and station ID embeds in the carrier RF and is necessary for the aircraft to use the VOR. The transmitter is controlled by either one of the monitors and the control indicator.

Power supply (1A6)

This power supply is a switching DC-to-DC converter that provides the working voltages to the transmitter, monitors, RF line switch, and enabling voltages to the ventilating fan. It uses switching regulators to reduce the input DC to lower pre-regulated DC voltages. In addition, the 1A6 power supply supplies the high current pre-regulated voltage modulation (V-Pre Mod) to the transmitter. The radio transmitter-modulation voltage level is controlled by internal power-supply circuitry and feedback signals from the radio transmitter-modulation circuitry.

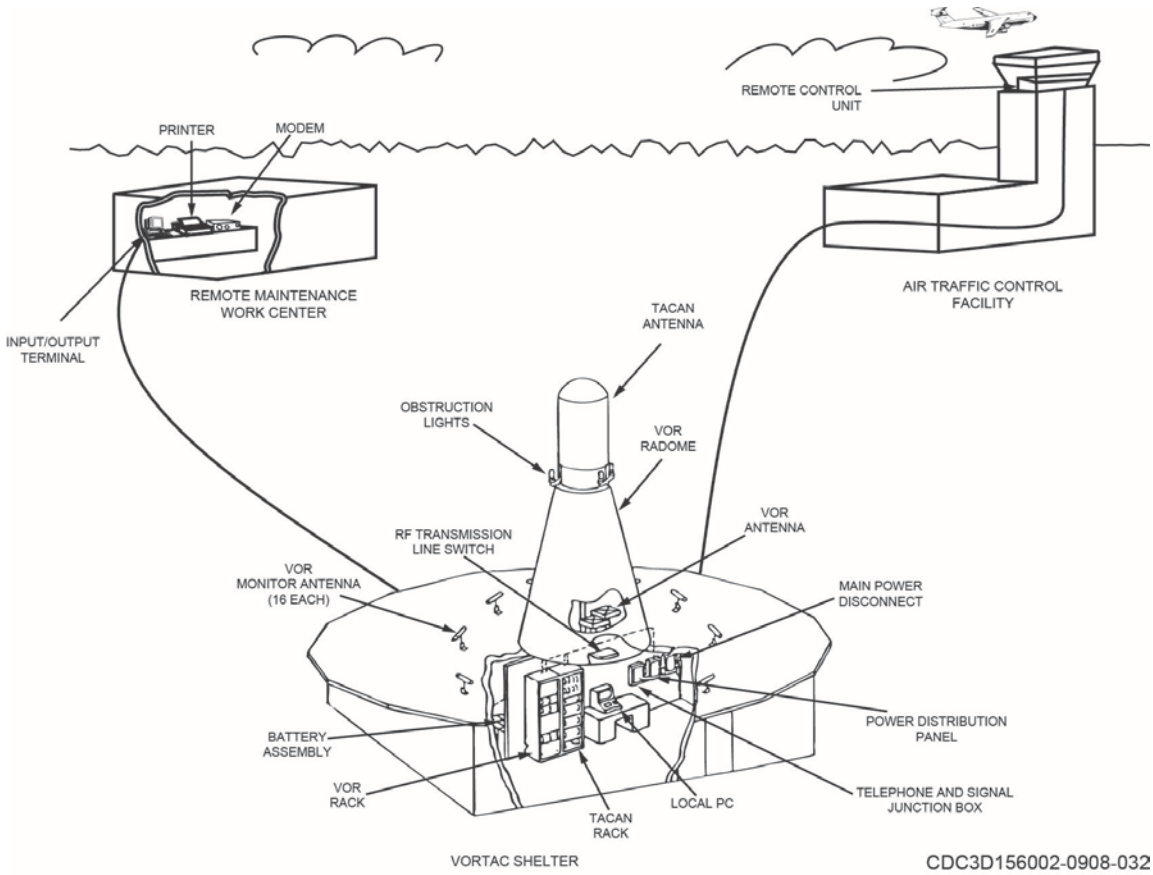

Figure 2–7. VORTAC facility.

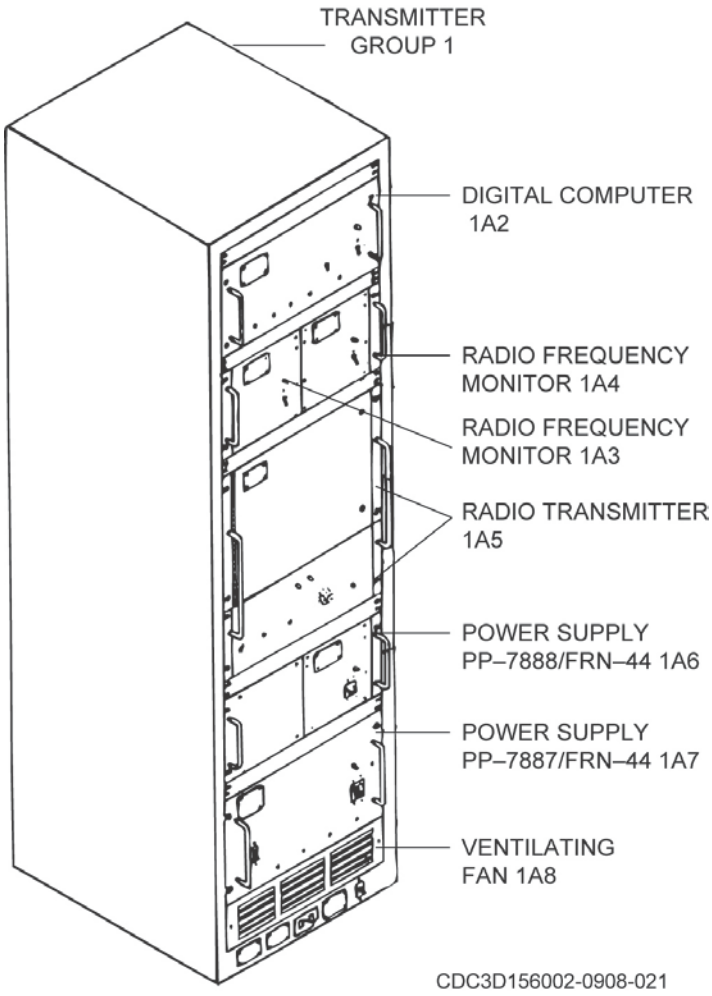

Figure 2–8. VOR transmitter group.

Power supply (1A7)

This is an AC to DC converter that provides an operating voltage of 40.5 VDC to power supply 1A6 and VOR battery assembly. During normal operation, the batteries charge by a constant “trickle charge” from the 1A7 power supply. If the AC main power fails, the VOR battery assembly supplies system power. When the AC main power resumes, the 1A7 power supply recharges the battery assembly to full charge.

Ventilating fan (1A8)

The ventilating fan maintains a constant airflow in the rack to keep the rack temperature within its normal operating range. The AC power for the blower is provided by the integral ventilating fan DC-to-AC inverter.

Major tactical air navigation system components

Figure 2–9 shows the TACAN transponder group, unit 2. It has the RFA 2A1, transponder 2A2, RF monitors 2A3, 2A4, and the power supply 2A6.

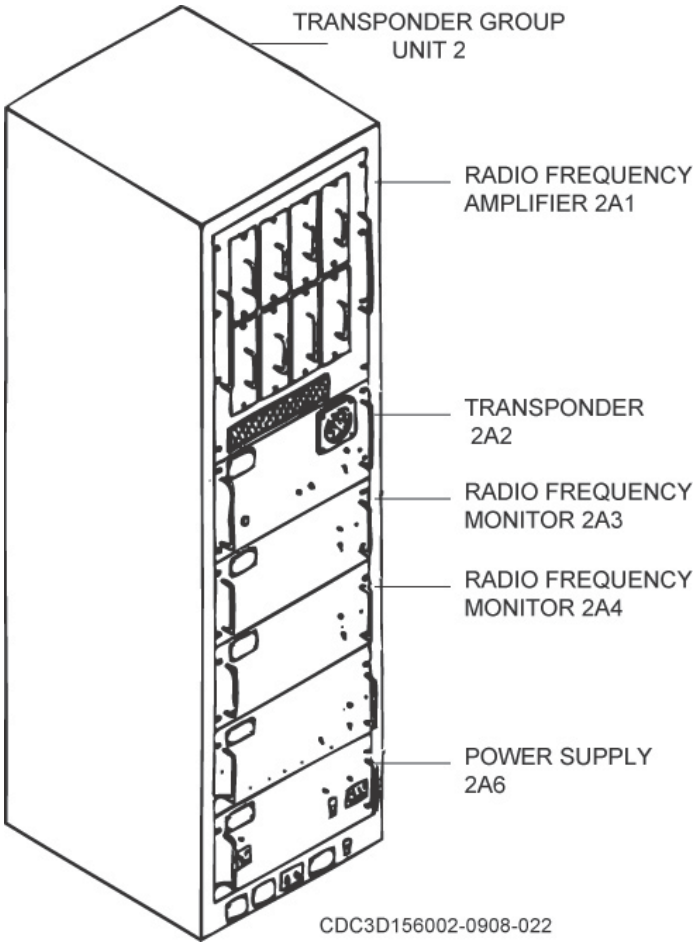

Figure 2–9. TACAN transponder group.

Radio frequency amplifier (2A1) and transponder (2A2)

Incoming interrogation signals are processed through the RFA by way of the equipment cabinet antenna connector. The RFA contains a low-pass filter, directional coupler/detector, and a 4-port circulator. The receiver port of the 4-port circulator routes the interrogation signals into the radio transponder receiver. Upon decoding a valid interrogation, a transponder reply is generated and gated; following priority rules, with reference bursts, IDs, and squitters. Squitters are noise pulses generated in the 2A2A6 decoder and 2A2A8 encoder. These pulses amplify to an RF level of 400 W and routed to the RFA, where they amplify to an RF level in excess of 3,000 W. The 3,000 W is then applied to the transmit port of the 4-port circulator and then to a low-pass filter and directional coupler/detector for transmission by the antenna.

Radio frequency amplifier (2A1)

The RFA supplies the final amplifier power gain, raising the output level to its 3 kW peak at the antenna by combining the output of eight 700 W amplifiers. The transponder 2A2 supplies the RF drive for the 700 W amplifiers. The RFA routes transmit and receive signals using a high-power, 4-port circulator, directing aircraft interrogations to the receiver in transponder 2A2. A high-power, RF-termination load connected to the 4-port circulator absorbs the transmitter output power if the antenna has an open or short circuit. Test interrogations from the RF monitors are injected through directional couplers in the RFA.

Transponder (2A2)

The transponder receives and decodes aircraft interrogations and generates coded reply signals. The aircraft receiver uses the replies in order to calculate the distance to the ground station. The transponder produces north and auxiliary reference pulse groups synchronized to trigger pulses generated by the antenna on the ground. The transponder generates random squitter pulses to keep a constant transmitter-duty cycle and maintain accurate azimuth; an angle used with an elevation angle to define the position of the aircraft in the sky. The transponder generates ID pulses in Morse code.

Radio frequency monitors (2A3 and 2A4)

The principal function of the RF monitors is to continuously check the TACAN navigational set operation by measuring critical system parameters and checking them against predetermined fault limit values. Some fault limits are fixed while others are adjustable using the system local and remote PC. When they detect a fault in the TACAN system, the monitors run diagnostic tests to gather data to determine the nature of the fault and which subassemblies are causing the faults. After completing the diagnostic tests, the monitors may elect to shut down the TACAN system by disabling the transmitter. The time from the first fault detection to transmitter shutdown is 14 seconds. The monitors also serve as a communication and control link between the computer and the TACAN. Test interrogation samples generate in each monitor and supply to the transponder receiver, through the directional coupler. Detected replies feed to each monitor in the form of buffered detected replies for evaluation of all required parameters

Power supply (2A6)

The power supply operates on incoming 120 VAC power and generates DC voltages for the transponder, amplifier, monitors, and antenna. The power supply also provides unregulated low-voltage DC and regulated 65 VDC for the TACAN transponder group. Additionally, the power supply supplies AC- and DC-main power, ON/OFF circuit breakers, and AC power for the fans. It also can run from a 120-VAC (single-phase, three-wire, 47–63 Hz) power source. Lastly, it provides transient high-voltage lightning protection and EMI filtering.

Very High Frequency Omnidirectional and Radio Range tactical air navigation facility

At a VORTAC facility, as shown in figure 2–7, the shelter houses the VOR transmitter, the TACAN transponder, one local PC, and a telephone. The VOR and TACAN antennas are in the radome above the shelter. A battery system is contained in its own cabinet is included to provide backup power for the VOR. The local PC used with the VOR and TACAN enables the operator to communicate with the monitors. The RMWC has a remote PC with a modem and a printer to provide communications with the VORTAC facility. The VOR and TACAN communicate through separate telephone lines to the control indicator at the ATC facility.

The VORTAC cabinets require only minor changes when the VOR and TACAN cabinets are placed side-by-side to operate as one within a VORTAC configuration. Two additional wiring needs must meet for a VORTAC configuration: the VOR monitors must be “wired” into the local PC in the TACAN cabinet, and the VOR keyer input is “wired” into the TACAN transponder. The keyer input is necessary to set up proper timing for the VOR- and TACAN-ID transmissions.

Identifying associated equipment

The following equipment is not contained in the equipment racks with the main transmitter and transponder components. Instead, they are located either in the equipment shelter, the RMWC, or the ATC facility (fig. 2–7).

Local and remote personal computer

The local and remote PC, either in the shelter or in the RMWC, normally includes a standard PC with a modem, some specially engineered interface cards, and a printer.

Control indicator

The control indicator mounts in one of the equipment panels in the ATC tower or it may be in the RAPCON facility (fig. 2–10). All front panel operator controls and indicators flush mount in a standard 19-inch rack.

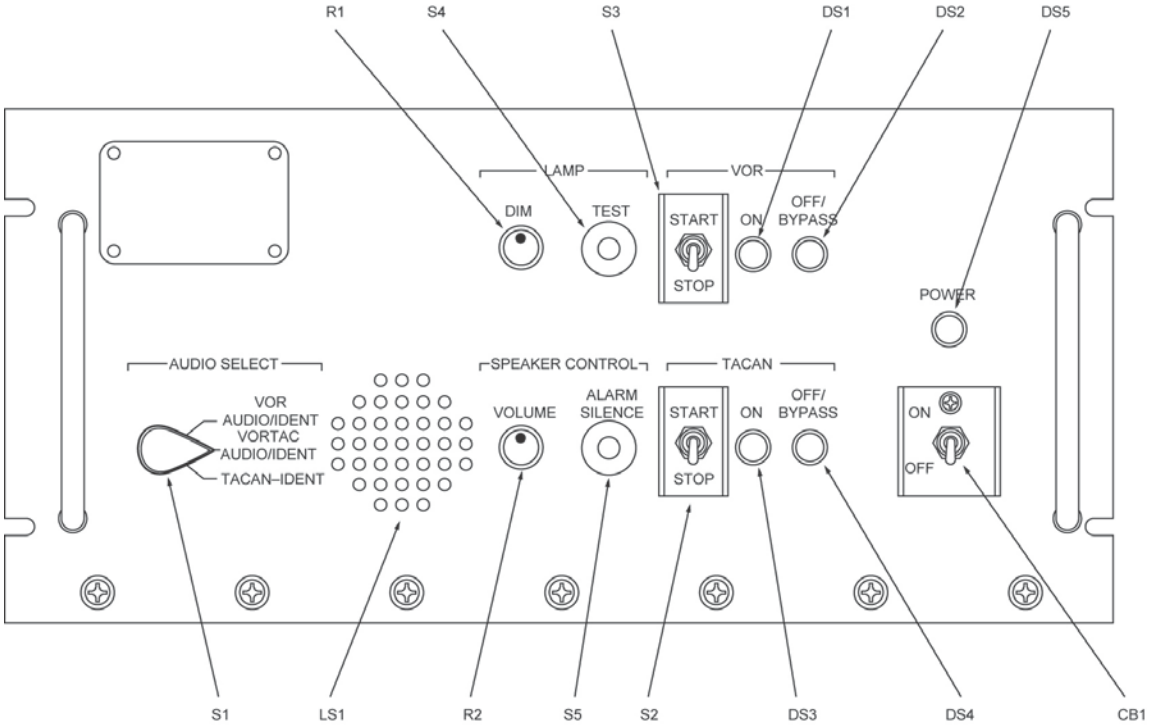

Figure 2–10. VORTAC control indicator panel.

Battery assembly

The battery assembly uses lead and calcium batteries with each cell providing 2.2 VDC. The 18 battery cells are trickle charged by the 40.5 VDC from the battery charger 1A7. The battery assembly can power the VOR cabinet for at least two hours if primary power is lost.

Very High Frequency Omnidirectional and Radio Range antenna assembly

The VOR antenna assembly, pictured in figure 2–7, is an Alford loop system (4-loop array) with four support pedestals inside the radome on top of the counterpoise. The antenna also has a center pedestal supporting a vertical polarizer.

Very High Frequency Omnidirectional and Radio Range monitor antenna group

The VOR monitor antenna group is a ground check kit for this system and consists of 16 monitor-probe antenna assemblies, a transmission-line switch, and interface cabling. This equipment integration allows selection and checking of the radiated signal characteristics at any one of the 16 VOR azimuth positions.

Very High Frequency Omnidirectional and Radio Range radome

The VOR radome provides a weatherproof enclosure for the VOR antenna. When used in a VORTAC configuration. It provides the mounting base for the TACAN antenna.

Transmission line coupler

The transmission line coupler, not shown in figure 2–7, is a bridge assembly made up of coaxial cables and connectors. This bridge assembly mounts on the wall next to the VORTAC equipment racks. Its purpose, like the distribution unit in the localizer, is to distribute the signals to the antennas

at the proper phase and impedance match that the VOR transmitter outputs to the VOR antenna assembly.

Power monitor assembly

The power monitor sensor monitors the flow of current between the VOR transmitter group and the battery assembly. During normal operation, the unit adds a 20-VDC reference voltage to the VOR telephone signal lines connected to the control indicator. Upon AC power loss (battery operation), it removes the reference voltage. The circuitry in the control indicator detects the missing reference, provides control signals that blink the power lamp on the control indicator, and produce an audio alarm indicating VOR battery operation. The power monitor sensor also provides an interface for the VOR voice signal lines between the transmitter group equipment rack, the ATC facility, and the remote maintenance work center.

OE–258 antenna

The OE–258 TACAN antenna is a solid state, electronically rotating antenna. It consists of two major parts: the antenna and the mod gen. The antenna contains the power dividers and azimuth feeds that generate the TACAN radiation pattern. The mod gen supplies the 15- and 135-Hz modulation components to the radiation pattern.

215. Operating the local and remote personal computer

The VORTAC is one of the most sophisticated systems that RAWS maintains. Instead of using analog meters to check system parameters, it uses a digital monitoring system. The digital monitoring system allows you to quickly perform many adjustments and alignments that would otherwise be very time consuming. It also performs fault diagnostics in a fraction of the time required to check the analog meters.

The remote PC at the RMWC, like the local PC, displays monitored and maintenance data, and allows user input to control various functions of the system. The local PC supplies communication using a modem to the remote PC in the RMWC. The printer, located at the RMWC, prints out selected VORTAC data. The lesson begins by discussing the functions and importance of the personal computer.

Personal computer operation

The primary method of operator control and monitoring of the VOR navigational set is through the local and remote PC. Either the local or remote PC provides the interface between the operator and the VOR/VORTAC/TACAN navigational set with a password security system preventing unauthorized use. Using either of the PCs, the operator can perform the following operations:

- Turn on/off the transmitter ID, and bypass monitors.
- Collect, display, and print measured parameter data.
- Collect fault diagnostic data.
- Adjust system parameters.
- Set monitor fault limits.

Personal computer system status window description

The PC display divides into two main windows. The system status window uses the basic system status display and the master menu window is the interactive area for operator inputs, and data and menu display. The system status window shown in figure 2–11 contains information about the status of the computer and the connected equipment.

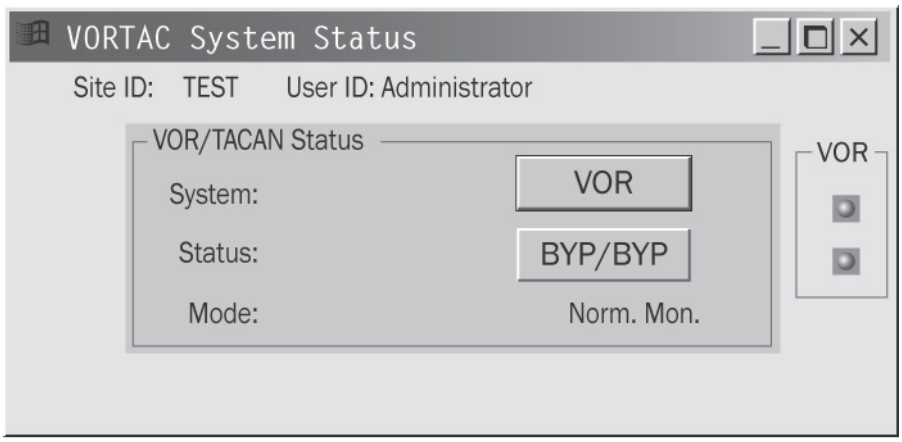

Figure 2–11. System status display.

When the VORTAC system status screen opens, you will see the following displays:

- Site ID—Each VOR site has an assigned ID code, which is three or four letters.
- User ID—The ID code of the current user is displayed up to 20 characters may be used.
- Status—The current status of both monitor A and monitor B is displayed in the next table.

Monitor Status Code	Explanation
BYP	Monitor in BYPASS mode.
MFT	Monitor fault in self-check.
MAL	Malfunction (CPU or monitor is off).
- - -	System not available.
CKS	Checksum error.
NOR	Normal operation.
FLT	Fault.
ALM	Alarm has occurred (an ALARM indication is latched and the display does not change, even if the status code does, until the acknowledged alarm indication entry is selected from the fault diagnostic menu).

Mode—Current monitor mode codes are displayed in the next table.

Operation Mode Code	Explanation
Norm. Mon.	Normal monitoring functions.
In Cal X	X is the calibration/test mode number(s).
Fault diagnostics	Fault diagnostics in progress.
Ground check	Ground check calculation in progress.
—-	System not available.

Personal computer monitoring and control system master menu

The monitoring and control system master menu control window contains operator interface information. The two main areas of the monitoring and control system master menu are the VOR functions and the common functions area. If you were looking at a TACAN only or VORTAC menu, the TACAN functions would also be displayed. These areas contain buttons that allow you to collect, display, and print measured parameter data, turn on/off the transmitter ID and alarm bypass, collect fault diagnostic data, adjust system parameters, and set monitor fault limits.

By clicking the specific buttons on the menus, you activate submenus to access and complete the above mentioned actions. The best method for learning to use the local and remote PC software is to actually use the software during your on-the-job training (OJT).

Using the local and remote personal computer

The local and remote PC is a valuable tool you have available to help you check out your system, whether it is a VOR, VORTAC, or a TACAN. The PC displays the data from both monitors and gives you the lower and upper limits of each parameter. This can be a critical step in troubleshooting and beginning to see the performance of your system. Other access menus allow you to reset the system, ensure critical parameters are within tolerance, and run fault diagnostics. You can look at figure 2–12 to see an example of some of the data that is available for your review. This example only shows data from a VOR, but the display is similar for a VORTAC or TACAN. Now, let's take a look at how system status information supplies to the ATC facility.

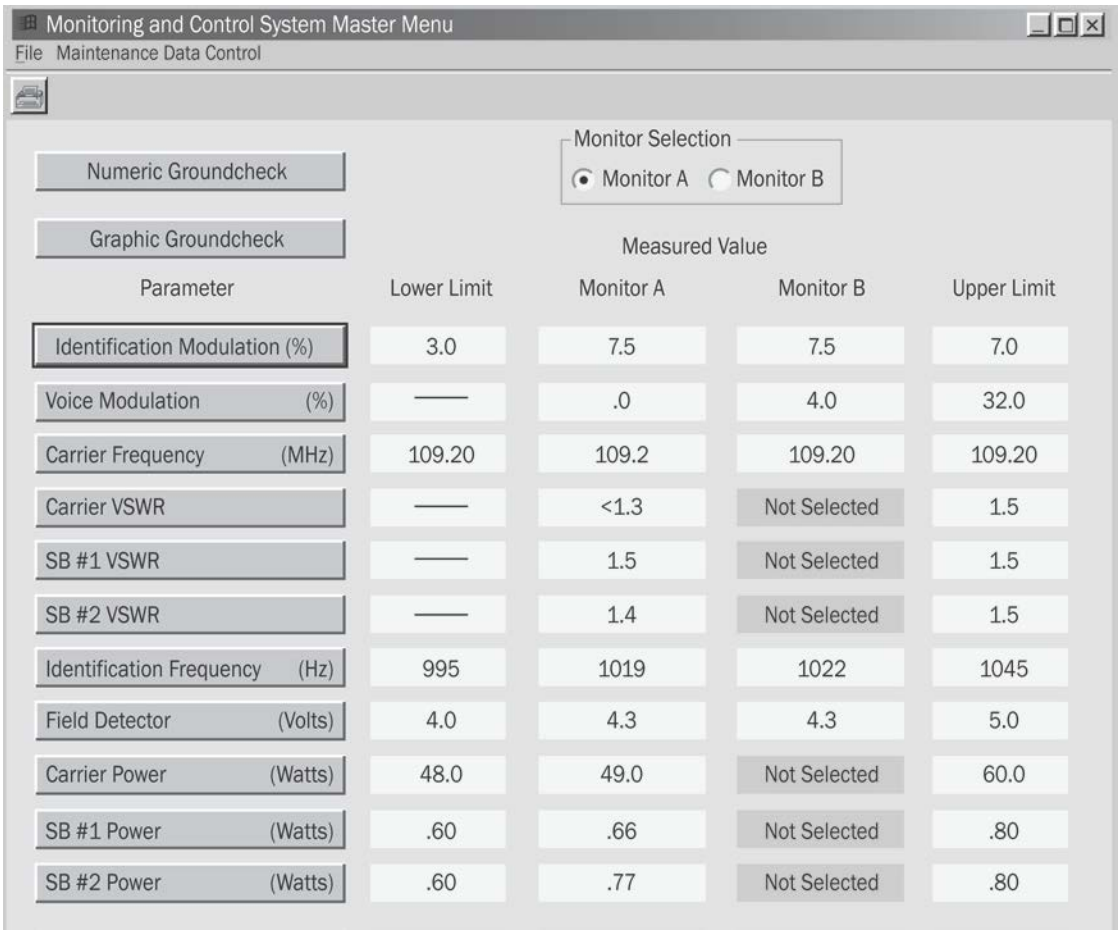

Parameter	Lower Limit	Monitor A	Monitor B	Upper Limit
Identification Modulation (%)	3.0	7.5	7.5	7.0
Voice Modulation (%)	——	.0	4.0	32.0
Carrier Frequency (MHz)	109.20	109.2	109.20	109.20
Carrier VSWR	——	<1.3	Not Selected	1.5
SB #1 VSWR	——	1.5	Not Selected	1.5
SB #2 VSWR	——	1.4	Not Selected	1.5
Identification Frequency (Hz)	995	1019	1022	1045
Field Detector (Volts)	4.0	4.3	4.3	5.0
Carrier Power (Watts)	48.0	49.0	Not Selected	60.0
SB #1 Power (Watts)	.60	.66	Not Selected	.80
SB #2 Power (Watts)	.60	.77	Not Selected	.80

Figure 2–12. VOR maintenance data menu display.

216. Control indicator

Remote control capability and system status supply to the ATC facility via the control indicator sometimes referred to as the remote control unit or RCU. The control indicator provides normal, alarm, bypass status, and transmitter ON/OFF control. We will start this lesson by covering the functions of the control indicator.

Control indicator functions

For the control indicator to give remote start and stop control and status signals for VOR and TACAN installations, the unit must do the following three actions:

1. Convert control panel inputs into control signals that can be transmitted over the communication links to the VOR and TACAN sites.
2. Monitor return signals from these sites.
3. Supply control signals and operating power for status indicators and audible alarms.

The active circuit elements carrying out these functions group together into the coder/decoder (CODEC), the power-supply module, the battery assembly, and the power- monitor display card. Communication between the equipment and the RCU is over standard-voice grade phone lines, two-wire lines, or a fiber-optic link. Operator ATC operator adjustments are limited to audio volume control and indicator brightness.

Power monitor display

The power monitor display card performs two main functions: filter background noise from the audio signals provided at the control indicator speaker and generate signals that indicate the VOR transmitter is operating on battery power. The power monitor display is divided into two basic sections: the audio filter circuit and receive, control, and display circuits section.

Audio filter circuit

The audio filter circuit consists of a three-stage band stop filter, centered around 2,630 Hz, and providing 12 dB rejection of the frequency range of 2,450 to 2,850 Hz.

Receive, control, and display circuits

Referring to figure 2–13, in normal operation, the 300- to 3,000-Hz audio and 20-VDC power monitor sensor status input applies to an isolation transformer. The transformer passes the audio through to the 6A1 CODEC card via the 2-way telephone signal line. The 20 VDC keeps the lamp control oscillator and the alarm tone oscillator disabled. If the power monitor sensor at the VOR site senses that the VOR is operating on battery power, it removes the 20 VDC. If this occurs, the power-monitor display card (6A4) senses the loss and enables the power lamp oscillator causing the POWER lamp on the control indicator to flash at approximately 1 Hz. At the same time, the alarm oscillator is enabled producing a 1,000-Hz tone to the control indicator speaker.

NOTE: The alarm circuits show AC power loss at a VOR facility; therefore, if there is only a TACAN installed a switch on the 6A4 card provides for TACAN ONLY operation and deactivates the alarm circuit.

Coder/decoder card

The CODEC card converts the start and stop (on/off) input signals from the VOR and TACAN START/STOP switches into output signals suitable for transmission to the remote VOR and TACAN transmitters. It also converts return signals from those remote sites into status signals. The CODEC circuitry is divided into the following four groups:

1. The display and alarm-sense circuits.
2. The VOR transmit and receive circuits.
3. The TACAN transmit and receive circuits.
4. The oscillator (alarm) and audio amplifier circuits.

For a block-diagram analysis, the VOR and TACAN transmit and receive circuit groups are alike; so, we only discuss one.

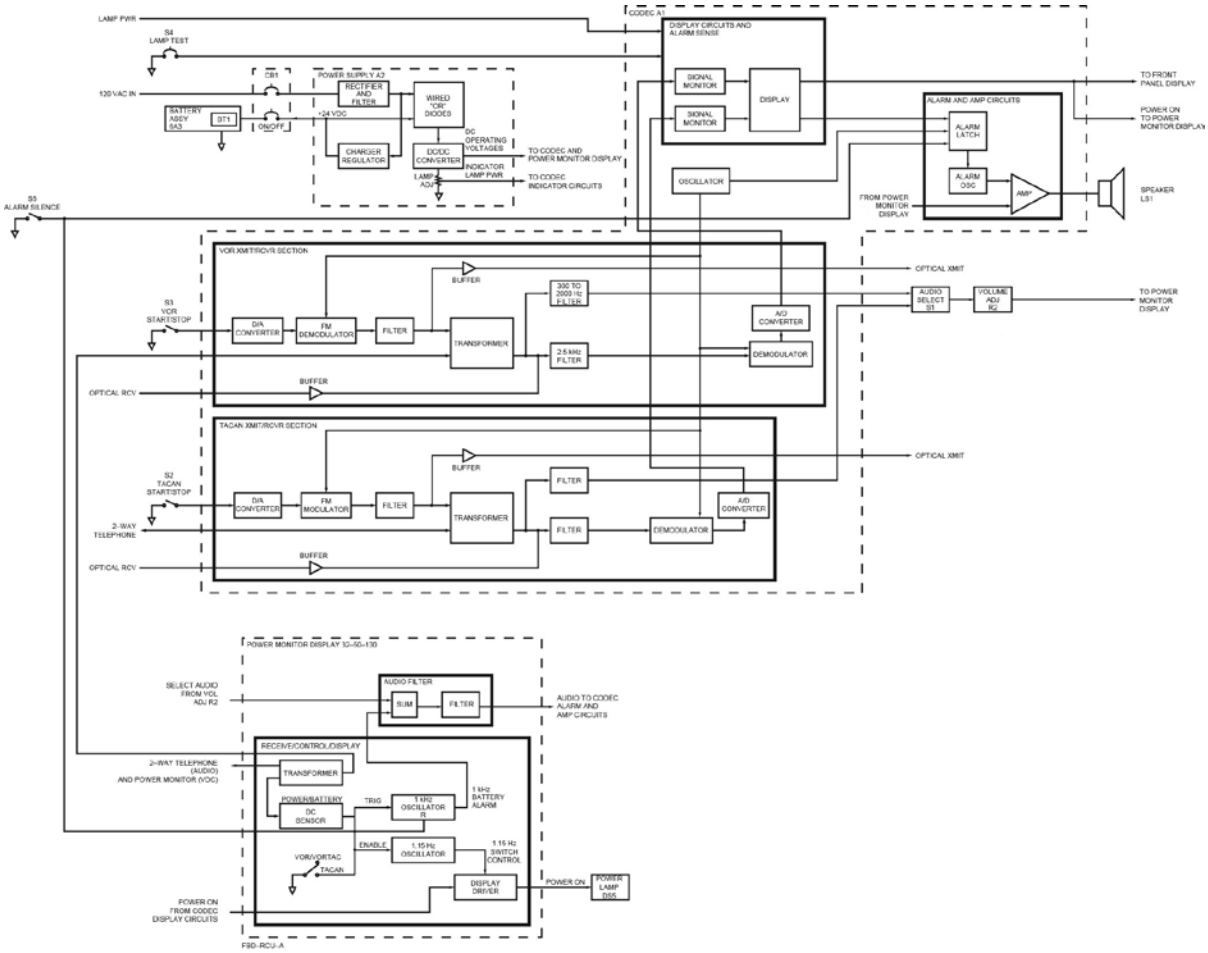

Figure 2–13. Control indicator block diagram.

Display and alarm-sensing circuits

The binary signals, produced by the VOR and TACAN receive circuits on the CODEC card, show the real ON or OFF status of the remote transmitters. The display circuits convert these binary signals into visual status signs. Notice these lamps show the correct status of the remote site and not necessarily the position of the START/STOP switch on the control-indicator. If the VOR START/STOP switch is in the start position, but for some reason the VOR transmitter does not respond, the indicator lamps for the VOR will keep on showing the true OFF status. To test the indicator lamps, depress the LAMP TEST button on the front panel; all lamps should light. With any degradation of a normal ON condition (that is, ON to BYPASS or OFF, or BYPASS to OFF), the alarm-sensing circuit triggers the alarm latch to send an audible alarm.

Very High Frequency Omnidirectional and Radio Range (or tactical air navigation) transmit circuits

The output of the VOR or TACAN transmit circuit is controlled by the START/STOP switch (S2 for TACAN and S3 for VOR). The binary output (START/STOP = low/high) of the switch is converted to a frequency-shifted AC-sine wave signal in the low-frequency modem. START (low) produces a 74-Hz signal; STOP (high) produces a 66-Hz signal. In the FM modulator, these signals frequency-modulate a 2,759-Hz-carrier signal that is filtered and sent over two paths; through a buffer/amplifier to a remote-optical link and through an isolation transformer to the 2-way telephone wire link. The oscillator provides the carrier signal and the 40-kHz clock to the modem, 2,759 Hz to the modulator, and a 1-kHz alarm tone.

Very High Frequency Omnidirectional and Radio Range (or tactical air navigation) receive circuits

In the VOR or TACAN receive circuits, the incoming signals from the telephone link or the optical link split into two paths by bandpass filters. One is a 300- to 2,000-Hz audio signal sent directly to the front panel, three-position, AUDIO SELECT switch (VOR, VORTAC, or TACAN ID); then to the audio amplifier and loudspeaker. The other is a frequency modulated 2.5 kHz carrier signal sent through a demodulator and out to an AC-sine wave at either 47 or 39 Hz. The low frequency modem clamps these to a binary high or low signal (39 Hz = logic high = remote transmitter OFF; 47 Hz = logic low = transmitter ON) sent to the display and alarm-sense circuits.

Oscillator and audio amplifier circuits

The audio/ID signal from the AUDIO SELECT switch routes through the VOLUME ADJUST potentiometer R2 to one of the two AUDIO AMPLIFIER inputs. The 1-kHz alarm oscillator connects to the other input. A latch circuit controls this input, which in turn is controlled by the alarm-sensing circuits. When the alarm latch triggers, the 1-kHz oscillator signal applies to the amplifier and stays until the ALARM SILENCE button is depressed; this resets the latch and turns off the alarm. The audio amplifier drives the loudspeaker. The audio and alarm volumes are adjusted independently.

Power-supply module and battery assembly

The 120-VAC input power goes through circuit breaker CB1 to the rectifier and ripple filter. The rectifier and filter outputs are about 38 VDC and applies to two points. The first point is through the charger/regulator and through another section of CB1 to battery assembly. The second point is through the diodes to the DC/DC converter. Notice if CB1 trips, all power removes from the circuit. Under normal circumstances, the DC output of the rectifier/filter is high enough to reverse bias the path from BT1 and BT2 through the diodes. This keeps BT1 and BT2 charged and prevents them from discharging.

The output of the rectifier/filter goes directly to the DC/DC converter. In a power failure or rectifier/filter shutdown, the reverse bias removes from the battery path through the diodes to the DC/DC converter. BT1 and BT2 assume the operating load by providing DC-power to the DC/DC converter. The DC/DC converter supplies various operating voltages to the CODEC circuitry and the power for the indicator lamps. Adjust the indicator lamp brightness by the LAMP ADJ control on the front panel.

217. AN/FRN–43A Very High Frequency Omnidirectional and Radio Range Tactical Air Navigation System

The AN/FRN–43A VORTAC system is very similar to the legacy AN/FRN–43 in operational characteristics, so we will not dig too deep into the theory of operation. As with all of the FoS systems described, the biggest upgrade on this system is the ability to remotely monitor and perform certain aspects of maintenance from a remote data terminal. To start this lesson, we will give you a system overview.

System overview

The AN/FRN–43A VORTAC system consists of complete VOR and TACAN navigational sets. The VOR and TACAN electronics subsystems cabinets are housed in an environmentally controlled shelter, with their antennas mounted coaxially above the shelter on a counterpoise. The counterpoise is most often the metal roof but can be an independent structure. The VORTAC is controlled and monitored from the RMC with a PC equipped with MDT software. The RSI in the ATC facility provides status monitoring and system ON/OFF operation.

Figure 2–14 shows the locations of the equipment in the VORTAC system. Technicians in the RMC use the MDT for routine status monitoring and maintenance. They also use the MDT at the equipment site during critical or periodic maintenance. The MDT communicates with the equipment through the

FCPU, which connects to the equipment through an Ethernet switch and manages all remote status, communications, and control. The UPS equipment cabinet in the VORTAC shelter contains the FCPU, modems, and Ethernet switches required for FCPU operations and for communicating with the RSI.

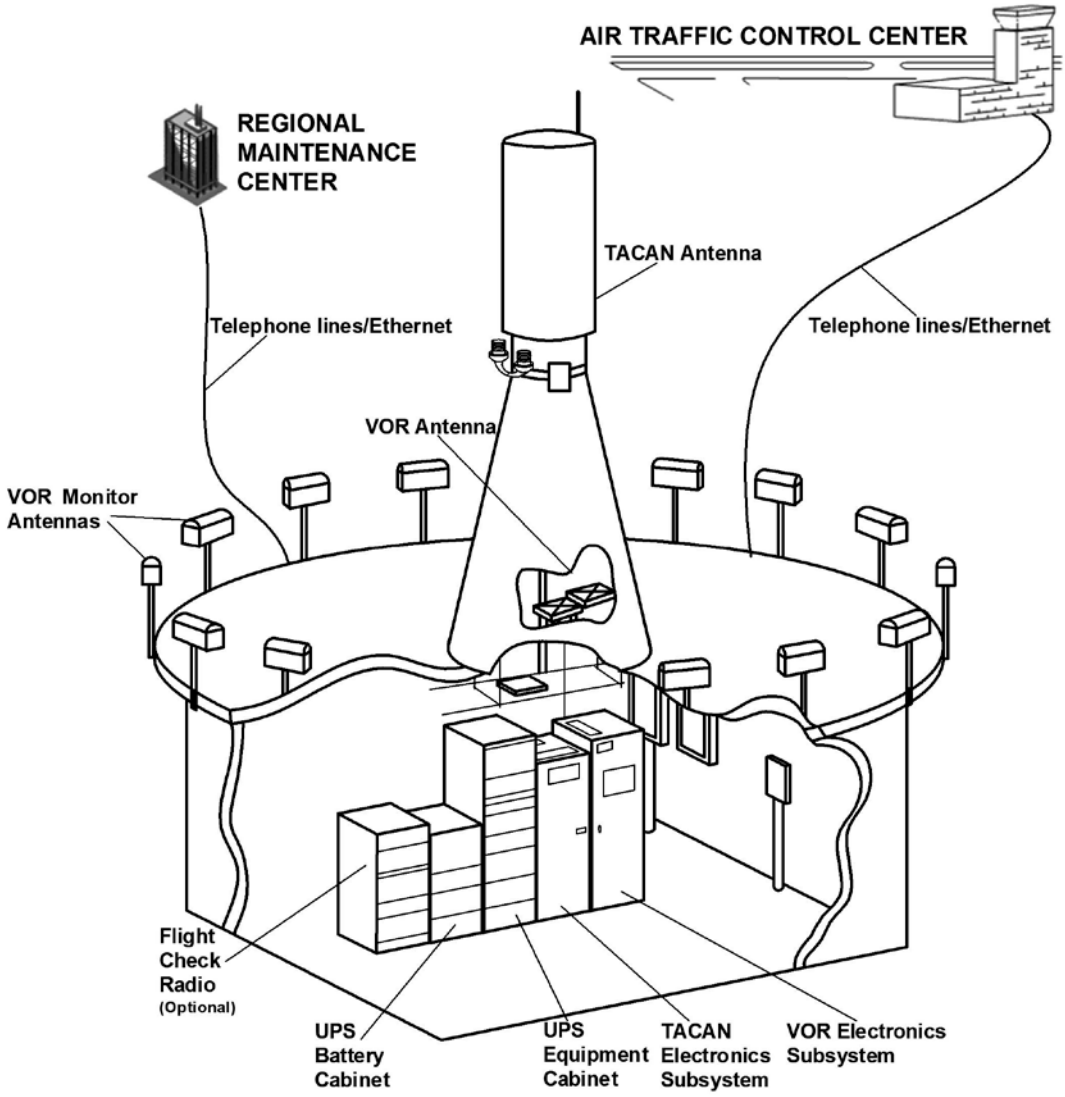

Figure 2–14. AN/FRN–43A VORTAC system equipment locations.

Capabilities, limitations, and theory of operation

Since the system is composed of the AN/FRN–44A VOR and AN/FRN–45C TACAN, the capabilities, limitations, and theory of operation for the systems can be found in the previously discussed sections of this unit. Further information can also be found in each system's respective TO.

Self-Test Questions

After you complete these questions, you may check your answers at the end of the unit.

214. AN/FRN–43 Very High Frequency Omnidirectional and Radio Range Tactical Air Navigation System facility components and layout

1. Match each VOR unit in column B with their function(s) in column A. Some column B items may be used more than once.

Column A	*Column B*
____ (1) Is a DC-to-DC converter.	a. VOR test generator 1A2.
____ (2) Produces the basic RF signals.	b. RF monitors 1A3/1A4.
____ (3) Contains a DC-to-AC inverter.	c. Radio transmitter 1A5.
____ (4) Generates the station ID.	d. VOR power supply 1A6.
____ (5) Provide test signals to align monitors.	e. Power supply 1A7.
____ (6) Collects fault isolation measurements.	f. Ventilating fan 1A8.
____ (7) Is an AC-to-DC converter.	
____ (8) Provides radio transmitter high-power modulation voltage.	
____ (9) Monitors automatic-ground check system.	

2. Match each TACAN unit in column B to their function(s) in column A. Some column B items may be used more than once.

Column A	*Column B*
____ (1) Provides AC power for the fans.	a. RFA 2A1.
____ (2) Receives and decodes aircraft interrogations.	b. Transponder 2A2.
____ (3) Provides regulated 65 VDC.	c. RF monitors 2A3/2A4.
____ (4) Raises output level to 3kW peak at the antenna.	d. Power supply 2A6.
____ (5) Generates test interrogation signals.	
____ (6) Directs aircraft interrogations to the receiver.	
____ (7) Measures critical system parameters.	
____ (8) Generates random squitter pulses.	

3. What changes are required when the VOR and TACAN systems are placed in the VORTAC configuration?

4. How long can the battery assembly power the VOR cabinet if primary power is lost?

5. What VOR unit acts like the distribution unit in the localizer, distributing signals to the antennas at the proper phase and impedance match?

6. What are the two major parts of the OE–258 antenna?

215. Operating the local and remote personal computer

1. What operations can you perform using either the local or remote PCs?

2. What are the two main windows the PC displays are divided into?

3. How would you activate a submenu on the local and remote PC?

4. Explain the data from the monitors being displayed on the PC.

216. Control indicator

1. What is the purpose of the control indicator?

2. What three functions does the control indicator perform?

3. What adjustments are ATC personnel allowed to perform on the control indicator?

4. What are the four basic areas of the CODEC circuitry?

5. What do the binary signals, produced by the VOR and TACAN receive circuits, on the CODEC card reflect?

6. What frequency is produced by placing the start/stop switch in the start position and the stop position?

7. What is the purpose of BT1 and BT2 in the control-indicator power supply?

217. AN/FRN–43A Very High Frequency Omnidirectional and Radio Range Tactical Air Navigation System

1. What are the antennas mounted on the AN/FRN–43A VORTAC?

2. What two navigation systems make up the AN/FRN–43A VORTAC?

Answers to Self-Test Questions

207

1. A minimum of two hours.
2. 108 to 118 MHz, ±0.001%.
3. Any internal monitor malfunction will cause an alarm, but will not cause system shutdown.
4. An alarm will occur within six seconds for continuous ID or 30 seconds for absent ID.

208

1. Sideband 1 and sideband 2.
2. The control indicator located in the ATC facility.
3. Octantal, quadrantal, and duantal.
4. Signals for monitor calibration, integrity checks, and fault isolation.
5. (1) +18 VDC.
   (2) –18 VDC.
   (3) +9 VDC.
6. (1) 9,960 Hz FM subcarrier with a center frequency of 9,960 Hz +/- 480 Hz that varies at a 30 Hz rate.
   (2) 1,024 Hz ID signal normally keyed at a dot/dash rate.
   (3) If used, a voice signal supplied by equipment that is normally located in the ATC facility.
7. 22.5° intervals.

209

1. Shelter and radome.
2. 200 miles.
3. MDT.
4. (1) RF carrier.
   (2) Voice.
   (3) ID.
   (4) 9960-Hz sub-carrier (frequency modulated ±480 Hz at 30 Hz rate).
   (5) 30-Hz variable.
5. 1,020 Hz every 7.5 seconds.

210

1. 962 to 1,213 MHz.
2. Up to 100 aircraft.
3. (1) Reply delay.
   (2) Pulse spacing.
   (3) Efficiency.
   (4) Output pulse rate.
   (5) ID.
   (6) Mod gen status.
   (7) NRB.
   (8) ARB.
   (9) Antenna scan rate.

4. Time from monitor interrogation to transponder reply.
5. 50 µs.
6. Pulse spacing.
7. Ratio of detected replies to monitor interrogations.
8. Burst ID sync generator card.
9. “78.”
10. (1) Receiver sensitivity.
    (2) Dead time gate.
    (3) Output power.
    (4) Pulse characteristics.
    (5) Transmitter frequency.
11. They are the same.
12. NRB and ARB pulse pairs.
13. 12 pulse pairs (12 µs between pulses of a pair) spaced 30 µs apart.
14. (1) +65 VDC.
    (2) +17.5 VDC.
    (3) –17.5 VDC.
    (4) +10 VDC.

211

1. Amplifies the drive signal to 3kW peak.
2. The primary monitor, normally monitor A.
3. The monitor.
4. Prevents electromagnetic noise, generated by the TACAN, from reaching the power supply.
5. Tell the monitor that a solid-state antenna is present, and indicate if a soft fail, hard fail, or clock fail condition exists.

212

1. 12 µs.
2. (1) NRB; 360 PPS.
   (2) ARB; 1440 PPS.
   (3) ID; 5400 PPS.
   (4) DME interrogation; random.
   (5) Squitter; (2700 - DME) X 2, 5400 maximum.
3. Holes occur in the output pattern and 135 Hz instability in the aircraft receiver.
4. The aircraft will be able to recognize their own replies by the pulse spacing between pair groups.
5. TACAN stations within 400 miles of each other are not assigned adjacent frequencies.
6. (1) Power divider.
   (2) Azimuth feeds.
   (3) Vertical columns.
   (4) Multiplexer.
7. Makes NRB and ARB triggers, used to produce NRBs and ARBs in the transponder, the 15 and 135 Hz modulation, and causes the radiation pattern to appear to rotate.
8. Microprocessor card.

213

1. (1) TACAN beacon.
   (2) Antenna.

(3) ATC facility remote status and control equipment.
(4) FCPU.
(5) UPS.
(6) FCR.
(7) Environmental sensors.
(8) Associated communications and interfacing equipment.

2. FCPU.
3. 3.5 kW.
4. 100.
5. 962 MHz to 1,213 MHz.
6. 12 µs.
7. Modulating the RF pulsed radiation from the TACAN transponder with 15- and 135-Hz modulating frequencies.

214

1. (1) d.
   (2) c.
   (3) f.
   (4) c.
   (5) a.
   (6) b.
   (7) e.
   (8) d.
   (9) b.
2. (1) d.
   (2) b.
   (3) d.
   (4) a.
   (5) c.
   (6) a.
   (7) c.
   (8) b.
3. The VOR monitors must be wired into the local PC and the VOR key input is wired into the TACAN transponder.
4. Two hours.
5. Transmission line coupler.
6. Antenna and mod gen.

215

1. Collect, display, and print measured parameter data, turn on/off the transmitter ID, and alarm bypass.
2. System status window and the master menu window.
3. Clicking specific buttons on the menus.
4. Data from both monitors is displayed along with the upper and lower limits of each parameter.

216

1. To provide remote start and stop control and status indications for VOR and TACAN installations.
2. (1) Converts control panel inputs into signals that can be transmitted to the VOR and TACAN sites.
   (2) Monitors return signals from these sites.

(3) Provides both control signals and operating power to status indicators and audible alarm.

3. Audio volume control and indicator brightness.
4. (1) Display/alarm sense circuits.
   (2) VOR transmit/receive circuits.
   (3) TACAN transmit/receive circuits.
   (4) Oscillator (alarm)/audio amplifier circuits.
5. The actual ON or OFF status of the remote transmitters.
6. Start = 74 Hz. Stop = 66 Hz.
7. To assume the operating load of the control indicator in a power failure or rectifier/filter shutdown.

217

1. Usually mounted coaxially above the shelter on a counterpoise but can be mounted on an independent structure.
2. The AN/FRN–44A VOR and AN/FRN–45C TACAN.

Complete the unit review exercises before going to the next unit.

Unit Review Exercises

Note to Student: Consider all choices carefully, select the *best* answer to each question, and *circle* the corresponding letter. When you have completed all unit review exercises, transfer your answers to the Field-Scoring Answer Sheet.

Do not return your answer sheet to the Air Force Career Development Academy (AFCDA).

34. (207) What is the carrier output power range, in watts, of the AN/FRN–44 Very High Frequency Omnidirectional and Radio Range (VOR)?
    a. 5 to 10.
    b. 10 to 25.
    c. 25 to 100.
    d. 50 to 150.

35. (207) What is the operating megahertz (MHz) frequency range of the AN/FRN–44 Very High Frequency Omnidirectional and Radio Range (VOR) antenna?
    a. 100 to 120.
    b. 108 to 118.
    c. 110 to 116.
    d. 112 to 114.

36. (208) The AN/FRN–44 Very High Frequency Omnidirectional and Radio Range (VOR) transmitter receives ON/OFF control signals from the
    a. control indicator.
    b. monitor front panel.
    c. digital computer front panel.
    d. remote maintenance work center.

37. (208) How many antennas sample the AN/FRN–44 Very High Frequency Omnidirectional and Radio Range (VOR) radiated signal and route the signals to the monitor?
    a. 10.
    b. 12.
    c. 14.
    d. 16.

38. (208) The AN/FRN–44 Very High Frequency Omnidirectional and Radio Range (VOR) battery assembly can fully recharge in how many hours?
    a. 12.
    b. 16.
    c. 20.
    d. 24.

39. (208) During normal operation, the AN/FRN–44 Very High Frequency Omnidirectional and Radio Range (VOR) power monitor sensor provides how many reference volts direct current (VDC) to the control indicator?
    a. 5.
    b. 12.
    c. 20.
    d. 24.

40. (208) The AN/FRN–44 Very High Frequency Omnidirectional and Radio Range (VOR) monitor antennas sample the output signal at degree interval
    a. 11.25.
    b. 20.
    c. 22.5.
    d. 25.

41. (209) The typical (line-of-sight) mileage range for the AN/FRN–44A Very High Frequency Omnidirectional and Radio Range (VOR) is
    a. 100.
    b. 200.
    c. 250.
    d. 400.

42. (209) The AN/FRN–44A Very High Frequency Omnidirectional and Radio Range (VOR) is typically controlled and monitored from the
    a. remote maintenance work center (RMWC).
    b. facility central processing unit (FCPU).
    c. Regional Maintenance Center (RMC).
    d. flight check radio (FCR).

43. (209) The AN/FRN–44A Very High Frequency Omnidirectional and Radio Range (VOR) voice component of the composite waveform is provided to
    a. communicate weather and airfield information.
    b. communicate station identification (ID).
    c. modulate the 480 Hertz (Hz) signal.
    d. assist with aircraft guidance.

44. (209) The interval, in seconds, the AN/FRN–44A very high frequency omni-directional and radio range (VOR) identification (ID) code is transmitted is
    a. 7.5.
    b. 12.
    c. 15.
    d. 15.5.

45. (210) The AN/FRN–45 Tactical Air Navigation (TACAN) System can provide bearing and distance information for up to how many aircraft?
    a. 50.
    b. 100.
    c. 150.
    d. 200.

46. (210) The definition of reply delay is the
    a. time from aircraft interrogation to monitor reply.
    b. time from monitor interrogation to transponder reply.
    c. pulse spacing from monitor interrogation to transponder reply.
    d. pulse spacing from transponder interrogation to monitor reply.

47. (210) The normal monitored measurement, in microseconds (μs), for X mode reply delay in the AN/FRN–45 tactical air navigation (TACAN) is
    a. .4.
    b. .5.
    c. 40.
    d. 50.

48. (210) The AN/FRN–45 tactical air navigation (TACAN) pulse spacing measurements are suspended during
    a. auxiliary reference burst (ARB) transmission.
    b. north reference burst (NRB) reception.
    c. identification (ID) transmission.
    d. ID reception.

49. (210) Which indication on the modulation generator (mod gen) display will a low power fault give on the AN/FRN–45 tactical air navigation (TACAN) modulation generator (mod gen)?
    a. 78.
    b. 88.
    c. FLT.
    d. ERR.

50. (210) The AN/FRN–45 tactical air navigation (TACAN) maintenance limit displayed for output power is the same as which parameter?
    a. Monitored radiated power.
    b. Transmitter frequency.
    c. Receiver sensitivity.
    d. Dead time gate.

51. (210) Which AN/FRN–45 Tactical Air Navigation (TACAN) System power supply output, in volts direct current (VDC), is over current and over voltage protected?
    a. +10.
    b. +17.5.
    c. –17.5.
    d. +65.

52. (211) How many monitors *must* fail or detect a fault for the AN/FRN–45 Tactical Air Navigation (TACAN) System to shut down?
    a. 1.
    b. 2.
    c. 3.
    d. 4.

53. (212) The AN/FRN–45 Tactical Air Navigation (TACAN) System uses pulse coding to
    a. discriminate against interference.
    b. prevent intentional receiver jamming.
    c. maintain constant transmitter loading.
    d. increase antenna gain while transmitting.

54. (212) The microsecond (μs) spacing between the AN/FRN–45 Tactical Air Navigation (TACAN) System pair pulses in the X mode is
    a. 12.
    b. 24.
    c. 36.
    d. 48.

55. (212) How many pulse pairs make up an auxiliary reference burst (ARB)?
    a. 3.
    b. 6.
    c. 12.
    d. 24.

56. (212) The total number of pulse pairs transmitted by the AN/FRN–45 Tactical Air Navigation (TACAN) System is
    a. 7,200.
    b. 5,400.
    c. 3,600.
    d. 1,440.

57. (212) The *most* important result of maintaining a constant AN/FRN–45 Tactical Air Navigation (TACAN) System duty cycle is
    a. pattern stability.
    b. minimized drift in tuned circuits.
    c. simplification the power supply design.
    d. assured constant current drain on all circuits.

58. (212) If an aircraft receives signals from two ground beacons operating on the same frequency, the
    a. weaker signal is almost totally rejected.
    b. co-channel interference will block the airborne receiver.
    c. distance and the azimuth to the farther station will be displayed to the pilot.
    d. two signals will saturate the receiver and cause the bearing indicator to hunt.

59. (212) At which rate, in revolutions per minute, and direction does the AN/FRN–45 tactical air navigation (TACAN) antenna pattern appear to rotate?
    a. 900, clockwise.
    b. 900, counter-clockwise.
    c. 1,350, clockwise.
    d. 1,350, counter-clockwise.

60. (213) Which software is the AN/FRN–45C tactical air navigation (TACAN) personal computer (PC) equipped with to communicate with the system equipment?
    a. Facility central processing unit (FCPU).
    b. Distance measuring equipment (DME).
    c. Maintenance data terminal (MDT).
    d. Remote status indicator (RSI).

61. (213) The AN/FRN–45C Tactical Air Navigation (TACAN) System frequency range, in megahertz (MHz), is
    a. 108 to 118.
    b. 962 to 1024.
    c. 962 to 1213.
    d. 1151 to 1213.

62. (213) In the AN/FRN–45C tactical air navigation (TACAN) X mode, the difference in frequency between the received frequency and assigned transmit (Tx) frequency is
    a. 6.3 kilohertz (kHz).
    b. 63 kHz.
    c. 6.3 megahertz (MHz).
    d. 63 MHz.

63. (213) The AN/FRN–45C tactical air navigation (TACAN) antenna produces an electrically scanned radiation pattern by modulating the pulsed radio frequency (RF) from the transponder with what two frequencies?
    a. 15 and 135 hertz (Hz).
    b. 15 and 135 megahertz (MHz).
    c. 30 and 9960 Hz.
    d. 30 and 9960 MHz.

64. (214) The AN/FRN–43 unit that measures and checks the Very High Frequency Omnidirectional and Radio Range (VOR) signals against established parameters is the
    a. radio transmitter.
    b. radio transponder.
    c. radio frequency (RF) monitor.
    d. local and remote personal computer (PC).

65. (214) The Very High Frequency Omnidirectional and Radio Range (VOR) unit that monitors the automatic ground check system is the
    a. radio transmitter.
    b. radio transponder.
    c. radio frequency (RF) monitor
    d. local and remote personal computer (PC).

66. (214) The Very High Frequency Omnidirectional and Radio Range (VOR) power supply 1A7 is an alternating current (AC) to direct current (DC) converter that supplies a volts direct current (VDC) of
    a. 30.
    b. 35.
    c. 40.5.
    d. 45.5.

67. (214) The tactical air navigation (TACAN) coded reply signals are used by aircraft to determine their
    a. direction to the runway.
    b. direction to the ground station.
    c. distance from the runway.
    d. distance from the ground station.

68. (214) One purpose of the squitter pulses transmitted from the tactical air navigation (TACAN) is to
    a. maintain constant transmitter duty cycle.
    b. maintain constant aircraft contact.
    c. generate reference pulse groups.
    d. generate identification pulses.

69. (215) How is the AN/FRN–43 Very High Frequency Omnidirectional and Radio Range Tactical Air Navigation (VORTAC) System local personal computer (PC) connected to interface with the remote PC?
    a. Modem.
    b. Optical interface.
    c. Control indicator.
    d. Radio frequency (RF) monitor.

70. (215) What is the *primary* method of operator control and monitoring of the Very High Frequency Omnidirectional and Radio Range (VOR) navigational set?
    a. Monitors.
    b. Transmitter assembly.
    c. Local and remote personal computer (PC).
    d. Radio frequency (RF) transmission switch.

71. (215) Within the AN/FRN–43 Very High Frequency Omnidirectional and Radio Range Tactical Air Navigation (VORTAC) System, the personal computer (PC) display is divided into how many main windows?
    a. 1.
    b. 2.
    c. 3.
    d. 4.

72. (216) Which adjustment can air traffic control (ATC) personnel make to the AN/FRN–43 Very High Frequency Omnidirectional and Radio Range Tactical Air Navigation (VORTAC) System control indicator?
    a. Operating power.
    b. Transmitter frequency.
    c. Volume control of audio.
    d. Transponder identification (ID) ON/OFF control.

73. (216) The function of the AN/FRN–43 Very High Frequency Omnidirectional and Radio Range Tactical Air Navigation (VORTAC) System coder/decoder (CODEC) section of the control indicator is to
    a. convert return signals from the sites into status indications.
    b. convert transmit (Tx) signals from the monitors into alarm tones.
    c. control the VORTAC identification (ID) signal.
    d. control tactical air navigation (TACAN) Tx signal.

74. (216) The visual status lamps on the AN/FRN–43 Very High Frequency Omnidirectional and Radio Range Tactical Air Navigation (VORTAC) System control indicator display the
    a. actual status of the remote site.
    b. actual status of the control indicator.
    c. position of the START/STOP switch on the digital computer.
    d. position of the START/STOP switch on the control indicator.

75. (216) The output of the transmit (Tx) section of the AN/FRN–43 Very High Frequency Omnidirectional and Radio Range Tactical Air Navigation (VORTAC) System coder/decoder (CODEC) is controlled by the
    a. ON/OFF switch.
    b. START/STOP switch.
    c. analog/digital (A/D) converter.
    d. digital/analog (D/A) converter.

76. (216) Which circuits are responsible for dividing the incoming audio and carrier signals in the receive section of the AN/FRN–43 Very High Frequency Omnidirectional and Radio Range Tactical Air Navigation (VORTAC) System coder/decoder (CODEC)?
    a. Digital/analog (D/A) converters.
    b. Analog/digital (A/D) converters.
    c. Two-way splitters.
    d. Bandpass filters.

77. (216) What is the kilohertz (kHz) frequency of the alarm oscillator circuit in the AN/FRN–43 Very High Frequency Omnidirectional and Radio Range Tactical Air Navigation (VORTAC) System coder/decoder (CODEC)?
    a. 4.
    b. 3.
    c. 2.
    d. 1.

78. (217) Which two systems make up the AN/FRN–43A Very High Frequency Omnidirectional and Radio Range Tactical Air Navigation (VORTAC) System?
    a. AN/FRN–42A Very High Frequency Omnidirectional and Radio Range (VOR) and AN/FRN–43C tactical air navigation (TACAN).
    b. AN/FRN–42 VOR and AN/FRN–43 TACAN.
    c. AN/FRN–44A VOR and AN/FRN–45C TACAN.
    d. AN/FRN–44 VOR and AN/FRN–45 TACAN.

Please read the unit menu for unit 3 and continue ➔

Student Notes

Unit 3. Navigational Flight Checks

3–1. Navigational Flight Inspections 3–1
218. Instrument landing system standards 3–1
219. General flight inspection information 3–3
220. Localizer flight inspection procedures and tolerance principles 3–8
221. Glide slope flight inspection procedures and tolerance principles 3–10
222. Instrument landing system flight inspection report form entries 3–12
223. Tactical air navigation flight inspection procedures and tolerance principles 3–14
224. Very High Frequency Omnidirectional and Radio Range aircraft indications, flight inspection and tolerance principles 3–18
3–2. Historical and Facility Records 3–28
225. Maintaining historical and facility records 3–28

FLIGHT INSPECTIONS ARE conducted by the Federal Aviation Administration (FAA). These checks ensure the navigational ground equipment is operational, reliable, and safe to use during inclement weather. In this unit, you will learn the importance of flight inspections, the different types of flight inspections, general information about flight inspections (that is, terminology used with flight inspections, form documentation, and so forth), and maintaining historical and facility records.

3–1. Navigational Flight Inspections

The ILS is one of the navigational aids (NAVAID) that enables a pilot to land an aircraft during periods of reduced visibility. This allows safe landings because the ILS compensates for the pilot's decreased vision. Different categories of ILSs permit landing under different categories of visibility.

218. Instrument landing system standards

Here, we review the categories of ILS. Tied in with the categories are the ILS points, zones, and sectors that identify the areas in front of, and surrounding, the ILS. This lesson reviews some basic information about the ILS and explains how it relates to flight check standards.

Categories

A *category* (CAT) I ILS provides acceptable guidance information from the point where the pilot intercepts the ILS to the point where the localizer course line intersects the glide path. This is done at a height of 100 feet above the horizontal plane containing the runway threshold. CAT II ILS requires more demanding accuracy than CAT I. The pilot must be able to follow the ILS from point of interception to a point where the localizer course line intersects the glide path at a point above the runway threshold. The most demanding ILS is CAT III, which allows for a safe landing from the point of interception to touchdown. Generally, most military ILSs are setup as CAT I, while large commercial airports are setup as CAT II.

Points

The ILS approach divides into approach zones 1, 2, and 3. The limits of these approach zones are set by points labeled A, B, C, D, and E. The following table explains the various ILS points.

ILS Point	Explanation
A	An imaginary point on the glide path/localizer course measured along the extended runway centerline, four nm from the runway threshold.
B	An imaginary point on the glide path/localizer course measured along the extended runway centerline, 3,500 feet from the runway threshold.

ILS Point	Explanation
C	A point through which the downward extended straight portion of the glide path (at the commissioned angle) passes at a height 100 feet above the horizontal plane containing the runway threshold.
D	A point 12 feet above the runway centerline and 3,000 feet from the threshold in the direction of the localizer.
E	A point 12 feet above the runway centerline and 2,000 feet from the stop end of the runway in the direction of the runway threshold.

Zones

Now that the ILS points have been covered, let's look at the ILS approach zones. There are five approach zones discussed in the table below.

Approach Zone	Explanation
1	The distance from the coverage limit of the localizer/glide path to point A (four miles from the runway threshold).
2	The distance from point A to point B.
3	Depends on the CAT of ILS involved. CAT I – The distance from point B to point C. CAT II – The distance from point B to the runway threshold. CAT III – The distance from point B to the runway threshold.
4	The distance from runway threshold to point D.
5	The distance from point D to point E.

Sectors

When either ground checking or flight checking your localizer, you need to be aware of the limits of the localizer clearance sectors. There are three clearance sectors, and they are called localizer clearance sectors 1, 2, and 3. Each localizer has a minimum requirement to detect audio levels. The levels are express in microamperes (µA) or DDM. Our *primary* concern is the radiated signal in sectors 1 and 2.

Localizer clearance sector 1

This sector runs from the center of the designed course to 10° either side of center. The detected audio level must increase at a linear rate from 0 DDM (at center) to .180 DDM using the PIR (0 to 175 µA in the aircraft). Maintain that value or higher to the end of sector 1. Most AF localizers exceed this minimum by a very large margin with values of .350 to .375 DDM.

Localizer clearance sector 2

This sector begins at 10° from center and goes to a point 35° from center. In sector 2, the minimum detected audio level should not drop below .155 (150 µA in the aircraft). Most AF localizers exceed .350 DDM.

Localizer clearance sector 3

Sector 3 runs from the end of sector 2 (35° off-center) to a point 90° off-center. As stated before, most AF localizers exceed .350 DDM.

Exceptions to clearance sector requirements

The µA-value tolerances are decreased by 15 µA while in an alarm configuration for flight inspection purposes. Deviations to less than 100 µA in any sector are not acceptable. In sectors 2 and 3, momentary deflections of the flight inspection cross pointer to less than the required tolerances are acceptable provided that the aggregate area does not exceed 3° of arc in sectors 2 and 3 combined on one side of the course. The same is true for the other side of the course.

219. General flight inspection information

The term "flight inspection" is commonly referred to as "flight check" in the career field. You may see these terms used interchangeably in this text and throughout your career. The standards for flight inspections and NAVAIDs system performance come from the ICAO. These are an internationally agreed upon set of standards. The FAA instituted a tighter set of rules and tolerances and published the *United States Standard Flight Inspection Manual* (FAA Order 8200.1D). Each one of the branches of the United States armed services adopted this order and put their own cover page on it. Any changes to this basic order by organizations other than the FAA can only make tolerances and parameters more stringent. The United States Air Force (USAF) identifies this order and its changes as Air Force Manual (AFMAN) 11–225, *United States Standard Flight Inspection Manual*. All AF-owned and operated facilities adhere to the standards in AFMAN 11–225 and its supplements.

A flight inspection provides the official check of our navigational facilities for proper operation. You must understand the various aspects of a flight inspection before the flight check aircraft arrives. Your background knowledge of flight inspections, as well as your knowledge of the equipment, provide for an efficient, effective flight inspection of your facility. Since you have already studied the equipment operation and applicable ground checks, listed below is a review of some general information on flight checks starting with the types of flight inspections.

Types of flight inspections

There are five basic types of flight inspections: (1) site evaluation, (2) commissioning, (3) periodic, (4) special, and (5) surveillance.

Site evaluation

This flight inspection determines the suitability of a proposed site for the permanent installation of an air navigation facility. The evaluation includes all checks pertinent to establishing that the site functions as a normal facility. The check is conducted with transportable NAVAIDs located at the proposed site.

Commissioning

This is a comprehensive flight inspection designed to obtain complete information on facility performance and establish that the facility supports its operational requirements. Checks are critical before we place any NAVAID facility in use. Correct any abnormal situations or indications identified during the inspection. Commissioned facilities, in usable, but not perfect condition, can still be operated as long as the problem areas are listed as restrictions.

Periodic

Periodic flight inspections scheduled at regular intervals ensure the facility continues to perform as commissioned. This inspection is generally less extensive than the commissioning check. The schedule for periodic flight inspections will be in accordance with AFMAN 11–225 or FAA Order 8200.1D, *United States Standard Flight Inspection Manual*, table 4–1. A partial example of the table is shown below.

Facility	Interval (Days)
ILS/ localizer directional aid (LDA)/ simplified directional facility (SDF) w/ GS	540
Localizer clearances at lower standard altitude (LSA)	1,080
Microwave landing system (MLS)	270
Precision approach radar (PAR)	270
Air surveillance radar (ASR) or wide area multilateration (WAM) system	540
VOR, VORTAC, TACAN	540 (1)

Facility	Interval (Days)
VOR, VORTAC, TACAN	1,080 (2)
DME, nondirectional beacon (NDB) facilities associated with an instrument approach procedure, marker beacons, communications, visual glide slope indicator (VGSI) and approach lighting systems	Inspect these facilities at the same interval as the system or procedure they support.

NOTES:

(1) 540 days for facilities (VOR or TACAN of a VORTAC) which support a standard instrument approach procedure (SIAP) or receiver checkpoint. An alignment orbit is required every 1,080 days for all facilities.

(2) 1,080 days for facilities that do not support a SIAP or receiver checkpoint.

Special

This is a flight inspection to determine facility performance or characteristics for special purposes or due to special circumstances. These special circumstances include certain types of equipment malfunctions, changes in terrain that could affect the radiation pattern, aircraft accidents involving NAVAIDs, and any major maintenance or modification of a NAVAID facility. Special inspections might also result from suspected malfunctions reported by maintenance technicians or customers.

Ordinarily, inspection is required only of those parameters or in those areas known or reported to have a malfunction. Special inspections can encompass any or all parts of a commissioning inspection and utilized for other special circumstances. After an aircraft accident, special flight inspections performance determines if facility performance or flight procedures could have been a contributing factor in or a cause of the accident. This inspection includes all periodic checks, monitor checks, and any other specific requirements established by maintenance, air traffic control personnel, accident coordinator, or in the case of a military facility, the base commander. It is essential that the equipment configuration and operating parameters be those that existed at the time of the accident.

Surveillance

This is an unscheduled flight inspection to determine if the NAVAID continues to meet applicable standards. If an out-of-tolerance condition exists, the surveillance inspection becomes a special inspection. Of the five types of flight inspections mentioned, only the periodic inspection occurs on a recurring basis. The frequency of periodic flight inspections is generally determined by the facility system performance analysis rating (SPAR). The SPAR classification is an analysis of the facilities past performance on an annual basis.

For an ILS, a new facility check occurs every 90 days. When no discrepancies are found on three consecutive periodic inspections (two of which are with monitors, if applicable), the interval increases to the normal level, which is 270 days. Since you will probably go to an established facility, you will most likely encounter intervals of 270 days.

The periodic interval decreases to the next lower interval if the same discrepancy stays on the same transmitter on two consecutive inspections in which the parameter evaluates or if three or more discrepancies exist during one flight check.

Check monitors on the first inspection after the commissioning inspection, reconfiguration inspection, or change in the SPAR rating. Otherwise, monitor check intervals are twice the computed periodic interval.

Facility classifications

NAVAID facilities are expected to be fully usable within specific limits of distance and altitude. Facility classifications and notices to Airmen (NOTAM) serve as tools to indicate facility restrictions and status of the NAVAID. The facility status classification indicates the general extent of facility performance as determined from each flight inspection, regardless of type. The tolerances for each NAVAID facility are listed in the respective TO, AFMAN 11–225, or FAA Order 8200.1D. The

flight inspector assigns one of the following three classifications to every facility: unrestricted, restricted, or unusable.

Unrestricted

An unrestricted facility is fully usable within its service area; it meets all tolerances.

Restricted

This status shows a facility that does not meet 100 percent of the established tolerances. In other words, the facility does not meet established tolerances within some specific locations of the service area. Some reasons for this may be the proximity of buildings or terrain that affects the transmitted signal.

Restrictions are printed in facility information (like the NOTAM we mentioned earlier) and are available to all pilots. You need to know which restrictions apply to your site to avoid the possibility of troubleshooting a problem reported by a pilot who failed to read about your particular facility. Such an oversight by a pilot can result in a call on a trouble that was never really a problem.

Unusable

A facility that is not safe, is unreliable, or poses a hazard to navigation is classified as unusable until the discrepancy is cleared. The site is not allowed to operate until the problem is corrected.

Technician responsibilities

In the interest of making an efficient and expeditious flight inspection, certain preparations and actions are required of personnel responsible for the ground phase of a flight inspection.

Always refer to AFMAN 11–225 for tolerances and definitions used by flight check personnel. For information about flight inspection reporting (form numbers and completion instructions), refer to FAA Order 8240.36N, *Flight Inspection Report Processing System (FIRPS)*.

Flight inspection crew responsibilities

To make the flight inspection go smoothly, all personnel must understand expectations of them. To this end, the flight inspector has the responsibility to make sure of the following:

1. All airborne equipment is calibrated.
2. The flight inspection crew is briefed.
3. Pertinent flight information is obtained.
4. Ground personnel are briefed of intended actions.

Workcenter supervisor responsibilities

You and your supervisor are the key elements to making your flight inspection efficient and trouble free. To assure this, the supervisor must do the following:

1. Provide two-way communication from the NAVAID site to the aircraft.
2. Ensure all possible ground calibration and checking is completed before flight check arrival.
3. Have qualified maintenance personnel at the site to adjust and correct as required.
4. Provide ground transportation to move flight check personnel and equipment to the NAVAID site(s) and/or base facilities, such as base operations, the chief of air traffic control operations (CATCO) office, and so forth.
5. Upon request, provide siting information for the facility, such as the facility data sheets, exact geographical coordinates, latest flight inspection reports, and so forth.
6. Forewarn the flight crew of possible problem areas or changes that have occurred since the last flight inspection.

7. Be aware and proficient with the terminology used and the adjustments to make during the flight inspection.

Flight inspection personnel and their equipment

Besides you, there are a number of people who make a flight inspection possible. The following table provides a list of some of those people who are directly involved.

Person	Description
Pilot	Sits in the left seat and actually flies the aircraft.
Flight inspection pilot (FIP)	Also known as, the flight inspector, this pilot sits in the right seat and coordinates the flight inspection with ATC personnel. The FIP is also ultimately responsible for deciding the suitability of the facility being checked. The FIP's main interest is the operational status and safety of the facility.
Flight inspection technician (FIT)	Referred to as the panel operator. This individual gather and analyze the data being transmitted by your facility and determines its usability. The FIT is also the person you talk to over the radio. In most cases, the FIT is a former airfield systems technician.

Equipment

Aside from the test equipment and special items associated with a flight check used by ground maintainers, the flight inspection personnel use an automatic flight inspection system (AFIS) and global positioning system (GPS). Primarily used by the FAA, AFIS is a method of inspecting a facility by using an onboard inertial navigation system (INS) as a reference. The INS tells the flight inspection computer the aircraft location. The computer analyzes the difference between this information and the information it receives from your facility to determine the results.

Flight inspection terminology

As we mentioned earlier, a clear understanding of the terms used during a flight inspection makes the inspection go smoother and more efficiently. The terms and definitions in this lesson are designed to help you with some of the more common terms. It would be a rather exhausting list to identify all terms used, so we stick to the common ones listed in the following table.

Flight Inspection Terms	
Term	**Definition**
Alignment error	The angular or linear displacement of a positional or directional element from its normal reference.
Mean sea level (MSL)	The true altitude above the sea level. The altitudes reported are MSL and may differ greatly from the above ground level (AGL) altitude.
Bends	Slow excursions of the course.
Checkpoint	A geographical point on the surface of the earth whose location can be determined by reference to a map or chart is a checkpoint. A fixed ground reference can be on the ground or in the air for VOR but must be on the ground for TACAN.
Clearance	Clearance is the preponderance of the modulation signal appropriate to the area on one side of the reference line or a point to which the receiver is positioned over the modulation signal appropriate to the area on the other side of the reference line. In other words, the ability to provide safe maximum indications to the pilot.
Crosspointer	An output current that is proportional to the ILS DDM measured in µA's. For VOR and TACAN, it is the difference between the course selected and the received course information measured in degrees.
Course error	The difference between the course as determined by the navigational equipment and the actual measured course to the facility. This error is computed as a plus or minus value, using the actual measured course to the facility as a reference.
Course scalloping	These are rhythmic excursions of the electromagnetic course or path that happen at a faster rate than bends.

Flight Inspection Terms	
Term	**Definition**
Course width (course sensitivity)	The angular deviation from a radiated course required to produce a full-scale deflection of the indicator on the airborne navigational instrument.
Coverage	The designated volume of airspace within which a signal-in-space of specific characteristics is to be radiated within facility tolerances.
Designed procedural azimuth	The azimuth, determined by the procedure specialist, that defines the desired position of a course or bearing for an approach.
Flag (flag alarm)	A warning device in flight instruments indicating: (1) the instruments are inoperative or otherwise not operating satisfactorily, or (2) the signal strength or quality of the received signal falls below acceptable values.
Flight Inspector	A flight crewmember certified by FAA's Aviation System Standards to perform flight inspections.
Glide slope intercept (GSI) altitude	The GSI altitude is the true altitude MSL proposed or published in approved let-down procedures at which the aircraft should intercept the glide path and begin a descent.
Instrument landing system commissioned angle and width	The glide angle and width that was engineered for that facility?
Missed approach point (MAP)	The MAP is a point prescribed in each instrument approach procedure at which a missed approach procedure shall be executed if the required visual reference does not exist.
NOTAM publication	A publication designed primarily as a pilot's operational manual containing current NOTAM information. It is considered essential to the safety of fight, as well as supplement data to other aeronautical publications. The work center will inform air traffic controllers to make sure pilots receive the most up-to-date information.
NOTAM	A notice containing information (not known sufficiently in advance to publicize by other means) concerning the establishment, condition, or change in any component (facility, service, procedure, or hazard in the National Airspace System) in which the timely knowledge is essential to personnel concerned with flight operations. The work center will inform air traffic controllers to make sure pilots receive the most up-to-date information.
Null	That area of an electromagnetic pattern where the signal has been intentionally canceled or unintentionally reduced to an unacceptable level.
Orbit flight	A flight around a station at a predetermined altitude and constant radius.
Polarization error	The error arising from the transmission or reception of a radiation having a polarization other than that intended for the system.
Receiver checkpoint	A specific point designated and published, over which a pilot may check the accuracy of his aircraft equipment, using signals from a specified station.
Reference radial	A radial, essentially free from terrain and side effects, designated as a reference for measuring certain parameters of facility performance.
Roughness	The rapid irregular excursions of the electromagnetic course or path.
Sensing (correct sensing)	A condition wherein the ambiguity indication gives the correct to/from, left/right, up/down indication.
Slant range	The line-of-site distance between two points not at the same elevation.
Structure	The excursion characteristics of a navigation on-course or on-path signal which includes bends, scalloping, roughness, and other deviations from a point to point correspondence with the aircraft and the facility.
Structure below path (SBP)	An angular measurement of clearance below path. The SBP is the angle at which 190 µA of fly-up signal is received.
Symmetry ILS-ICAO	A ratio between the 90- and 150-Hz sectors expressed in percent. It could also be defined as the difference in linear deviation from course/path centerline to the width point on either side of centerline. In the aircraft, it is measured by using the 90Hz tone as a reference.
Usable distance	The maximum distance at a specified altitude at which the facility provides readable identification and reliable bearing or glide path information under average atmospheric condition.

220. Localizer flight inspection procedures and tolerance principles

The general sequence of flight inspections may vary; however, you need at least a basic understanding of the different checks, parameters, and reference readings so you can record them. When making changes to satisfy the requirements of a flight inspection, always observe monitor indications for the particular parameter you are changing. This way you can see, to some extent, the effect in the field. Additionally, remember that records of measured DDM, powers, control settings, and waveforms are an integral part of maintaining any system. These reference readings can be used by the technician to verify normal operation and as an aid to troubleshoot the equipment later when problems occur.

The procedures presented here emphasize the standard checks performed during a periodic flight inspection. Other checks, we mention only briefly and do not go into detail. The main items evaluated during a flight check are alignment/structure, course alignment, modulation level, identification, course width, clearances, symmetry, course/clearance wide alarms, and normal width/symmetry.

Low approach run

This run is done in normal configuration. The flight check aircraft would land in the same manner as any other aircraft flying in the system. During the flight alignment/structure check, monitor alarm check, modulation level, and ID are measured.

Alignment/structure check

There is no preparation for this check since it immediately follows the width/symmetry run. The aircraft flies inbound and records any deviations on the centerline. The flight inspector reports the maximum structure deviation per zone and overall alignment of the centerline. During this run, the crew usually banks the aircraft and measures the amount of vertical polarization. The polarization run can be a separate run, but it is often combined with this one to speed up the process. It is also during this run when the MOD% is usually measured. Record these readings on the applicable forms.

Monitor alarm check (course alignment)

The effectiveness of course alignment monitoring can be checked either in the same area as alignment was determined, or with the aircraft sitting on the runway course centerline no closer than 3,000 feet from the antenna. When advised by the flight check aircraft, shift the course to one side until an alarm is indicated on the COURSE DDM alarm. This is accomplished by adjusting the MOD BAL control on the front panel. When advised, shift to the other side for an alarm. When again instructed, return the MOD BAL control to its original position for normal operations (this should be the setting the control was on before the course alarms check was started).

The FAA specified tolerance states that the alignment monitor must alarm before the course shifts to a level of ±15 µA for CAT I, and ±11 µA for CAT II. These shift tolerances are from the designed course, not from the measured alignment of the inspection.

The monitor alarm points are normally adjusted to a tighter value and expressed in DDM. They are calibrated to show a COURSE DDM alarm at 0.011 DDM for either CAT.

When the flight inspection aircraft reports an alignment of so many µA’s left, the aircraft is receiving predominantly 150 Hz when flying the actual designed course. This is an indication that the radiated centerline moved left. When the aircraft reports an alignment to the right, the inverse is true.

For the alignment monitor alarm check, the reported µA shift, when in alarm, is from the designed course.

EXAMPLE: If the localizer alignment for transmitter one is 2 µA right and when put into alarm an additional 9 µA was indicated, the reported alarm shift for that one side (90 or 150) is 11 µA from designed course. Any out of tolerance condition during flight check should be adjusted by the BAL CAL in the transmitter.

Modulation level

Normally, there is no separate run to check the MOD%. This requirement is usually fulfilled during the alignment/structure run. The exception is that this parameter is checked separately only during commissioning and site evaluation inspections.

The flight check aircraft checks the modulation levels to ensure 0.200 DDM per tone. During this check, both transmitters are in NORMAL and the aircraft is flying inbound on course and on glide path between 3 and 10 miles from the localizer antenna. Any error can be corrected by the MOD PERCENT control on the appropriate course or clearance transmitter. The modulation level tolerance is ±4 percent (for CAT I-ILS) of the commissioned measurement, as read on the localizer monitors. As for the aircraft, measurement of the modulation level tolerance is 2 percent at commissioning of the system. Any out of tolerance condition during the flight inspection should be adjusted by the COURSE transmitter modulation percentage control.

Identification

The station ID is monitored and recorded during all checks. This ensures that the station ID is received throughout the coverage area. The inspector looks for correct characters, clarity, coverage, spacing, and the affect it has on the course.

The major ID adjustment is the IDENT MOD percent control on the modulator card. If modulation is excessive, it interferes with course alignment; if it is too low, it will not meet minimum requirements. If code clarity is bad, adjust for maximum amplitude of the 1,020-Hz tone viewed on the oscilloscope. For normal ID, the monitors should read 005.0 ±001.0 percent on ID PERCENT MOD positions.

If the ID is not properly strapped during initial transmitter tune-up, the facility will not be commissioned until corrected. This ensures that the station identification is received throughout the coverage area.

Normal width run

This run is done in normal configuration. The flight inspection aircraft will fly an arc and measure levels in a manner equivalent to an airborne ground check. The following areas will be measured:

- Course width—The total course width (combination of 90 and 150 sides). Any out of tolerance condition during flight check should be adjusted by the Course SBO power or an immediate adjustment of the RDU Course Width DDM to return the course monitors to a .155 indication in normal.
- Clearances—The lowest reading on each side (90 and 150) of the main course sector. Stated will be the lowest µA reading and the degree point at which it was located. All readings outside of the course width out to 10° on each side must be above 175 µA. From 10–35° on each side must be above 150 µA. Although they are affected by clearance power and phasing, these readings are primarily a function of the antenna and facility siting and are not normally adjusted.
- Symmetry—The percentage of 90 and 150 comprising the total course width will be measured. This will always be given by percent of 90 Hz, for example. If symmetry is stated to be 55 percent, then your width is 55 percent 90 Hz predominant and 45 percent 150 Hz dominant. This means that of a 3.00° width, 1.65° is 90 and only 1.35° is 150. This example is also the tolerance. The reading must fall within 45–55 percent. At the localizer, this is a function of the distribution board and antenna system and cannot be adjusted.

Course wide clearance/wide alarm run

This run is done at the point that the system shuts down, should the SBO power drop. The flight inspection aircraft will fly an arc and measure levels in a manner equivalent to an airborne ground check exactly as they do in the normal width run. The tolerance for the course width is ±17 percent of the commissioning width and the clearance tolerances are the same as in the norm width run. This

check is performed to make sure the monitors detect an alarm condition (resulting in shutdown) before the radiated signal goes out of tolerance. It is checked during commissioning and periodic (with monitors) flight inspections.

During this check, you adjust the course transmitter sideband amplitude control until both course monitors just show a course width alarm, approximately 0.141 DDM. Then, you adjust the clearance transmitter sideband amplitude control until both clearance monitors just show a course width alarm, approximately 0.129 DDM.

The check is performed the same as normal width (35 to 35° arc). A linear increase to160 μA in sector 1 and greater than 135 μA in sector 2. When returning the facility back to normal after successful completion of this check, always return the clearance transmitter back to NORMAL (.155 DDM) first and then return the course transmitter back to NORMAL (.155 DDM).

Normal width and symmetry run

This run is required after all of the alarm runs have been completed to make sure the facility has been returned to proper operation.

NOTE: In case of discrepancies, local directives and technical publications always take precedence over information in this text. By no means does this lesson contain all the checks associated with a localizer. Refer to AFMAN 11–225 for a list of all required checks, and to TO 31R4–2GRN30–2–WA–1 for equipment setup during flight check.

221. Glide slope flight inspection procedures and tolerance principles

As with the localizer flight inspection, the GS is checked to be certain it meets the standards of performance as set forth in AFMAN 11–225, *United States Standard Fight Inspection Manual*. The procedures presented here emphasize the standard checks performed during a periodic flight inspection, all other checks we mention only briefly. The main items generally evaluated during a GS flight inspection are symmetrical dephase, normal width/reference (flight inspection only), wide alarm, advance/retard phase alarm, and normal width/angle/symmetry/structure below path. Refer to AFMAN 11–225 for a list of all required checks, and to the appropriate glide slope TOs (e.g., NR, sideband only, or capture-effect) for equipment setup during flight check.

Modulation level

There is normally no separate run to check the MOD%. This requirement is usually fulfilled during the structure run, while the aircraft is flying inbound on course and on glide path.

This check is performed during all inspections. The aircraft receiver must receive at least a minimum of 150 μV of signal strength, and the facility configuration must be radiating normally.

To adjust MOD%, use the modulation percentage control on the front panel; a normal reading is approximately 80.0. This is read on the percent MOD position. Because there is no adjustment of the monitors for MOD%, this reading is primarily for reference only.

Symmetrical dephase and normal width/reference (flight inspection only)

This is to check the dephase of the system and to make sure that the width in the air is between 0.65 and 0.75°.

Wide alarm run

Width alarms are checked as frequently as the localizer, and for the same reason. To check the width alarm points, you decrease the SBO until the monitors indicate a WIDTH DDM alarm. The monitors should indicate a reading of 0.155 DDM for a wide alarm. Your monitors must see an alarm (in either direction) before the width goes outside its 0.5 to 0.9° tolerance. As an extra precaution, record the SBO power levels at each alarm point for future reference.

Advance and retard phase to alarm run

Phasing of the SBO signal in relationship to the CSB signal is advanced, and then retarded while the aircraft makes a width, angle, and SBP check (level run). The monitors must see an alarm before the width exceeds the wide tolerance point.

For this check, you use a barrel/bullet connector and the sideband phaser to change the phasing at the request of the flight inspector. Note that when the monitor alarms, the reading is the same as for width alarm (wide) check. If the monitor does not catch the width change when dephasing occurs, then there is probably a cabling problem associated with the integral monitoring system or with the combining unit.

Remember that flight inspections are tailored for each facility and may be somewhat different at your site. The checks we discuss in this lesson are for a NR system but should also apply if you have a CE or sideband-reference GS. There are some exceptions for CE and sideband-reference GSs; therefore, refer to the appropriate TO.

Normal width/angle/symmetry/structure below path run

There are two methods commonly used by flight inspections to measure these parameters.
The first method is the level run method. This is accomplished by the aircraft flying inbound from about 8 nm from the antenna at the GSI altitude. If the theodolite is used, the theodolite operator sends a 1,020-Hz tone at 0.2° increments until the panel operator has enough information. If “position fix” is used, the computer determines the location of the aircraft. For this method, the panel operator analyzes where the SBP point (190 µA of fly-up signal) occurs, path width, path angle, symmetry between the 90- and 150-Hz lobes, and if the first false path occurs after 150 µA of fly-down signal. The width is determined by observing at what angles the 75 µA points above path and below path occur. The angular difference is the width.

The second method is called a barrel run. For this check, there is not much you can do about the angle unless you reposition the GS antennas; this is not likely anyway. If the antennas were repositioned, the facility would be required to be re-commissioned.

The tolerance for the glide angle is 7.5 percent below and 10 percent above the commissioned angle. For a 2.5° angle, this would equate to a tolerance of ±0.18° (7.5 percent of 2.5° is 0.1875°; 0.19° would be out of tolerance, so 0.18° is the tolerance level). Monitors should be calibrated to indicate an alarm when tolerances exceed the range of ±0.05 DDM.

Find the GS width by locating the angles at which the recorder shows 1/2 the width value or 75 µA. Then, multiply by two to give the full width values. To correct the width, adjust the sideband amplitude control. The width tolerance is from 0.5 to 0.9° with optimum being 0.7°. The monitors should show a reading of approximately 0.175 DDM for width. If the monitors read outside this range and the width is correct, check the alignment of the combining unit. This applies only if your monitors are offset correctly.

Width symmetry is checked during the level-run method. Symmetry, as you may recall, is the ratio of unbalance between the 90- and 150-Hz sectors. It is computed as a percentage and reported on the 90-Hz sector only.

As an example, say that the flight inspector measured the width between the 75 µA points and came up with 0.3° below, 0.4° above, and 0.7° total width. Although the total width is correct, the pattern is nonsymmetrical above and below the path. To find out by how much, you must first setup a relationship such as:

$$\frac{0.4}{0.7} = 0.57$$

which is:

$$\frac{\text{width of the 90 - Hz sector}}{\text{over total width}}$$

This is then expressed as 57 percent/90, which would be well within the required tolerance for either CAT I or CAT II.

Structure

Path structure is the roughness, bends, or scalloping found on the actual path angle. The aircraft fly a barrel run (as we described earlier) to threshold. For a CAT I, we report only to Point C. In CAT II we analyze to threshold.

Clearances can be regarded as the maximum amount of fly-up signal available within the service area. Associated with clearances is SBP. The SBP is the point at which 190 µA of fly-up signal occurs. To be within tolerance, SBP must occur at an angle that is at least 30 percent of the commissioned angle or higher. For example, a glide path angle of 2.5°, SBP must occur at an angle of 0.75° or higher. If 190 µA cannot be obtained, or if the angle is lower than 30 percent, a clearance below path check is required.

This check is performed by flying the aircraft inbound on course from the extent of the service area to threshold. A minimum of 180 µA must be observed (150 µA when in alarm), and the aircraft must clear all obstacles.

222. Instrument landing system flight inspection report form entries

As with all flight inspections, the returned report is a listing of the findings found during that inspection. The intent of this lesson is to give you some general guidance to understand the report form and its information. The report form that will be filed with your facility is the FAA Form 8240–8, Flight Inspection Report – Instrument Landing System (ILS), out of the FAA Order 8240.36N.

NOTE: FAA Form 8240 series flight inspection report forms (e.g., localizer and GS, and blank forms) referenced in this lesson are not available for public access (that is, online, and so forth). These forms can be reviewed as either a completed form in your facility records or a blank form in the FAA Order 8240.36N.

We start this lesson discussing the localizer report.

Localizer report

The following is an explanation of the fields you will see in the localizer report.

Field 1. Flight Inspection Report Header—Field 1 is self-explanatory; the boxes listed in this area are the following:

- Ident of the localizer.
- Owner of the equipment (that is, unit or major command [MAJCOM] information, and so forth).
- State.
- Country.
- Region.
- Inspection date(s); it may take more than one day to flight check.
- Location (base).
- Runway (e.g., 19).
- CAT (e.g., I, II, or III).
- Inspection type (e.g., commission, periodic, etc.).

Field 2. Crew Information—Field 2 is self-explanatory and is all about the flight check crew that checked the localizer.

Field 3. Facility Information—The localizer, for example, could have the following blocks annotated with FAA codes.

"Localizer," "Offset," "Other," "SIAP," "Publications," "Comd width" (commissioned width), "facility status," "F/C" (front course), "B/C" (back course), "ILS Class Sys" (ILS classification system), "Insp Criteria" (inspection criteria), and "Rollout."

NOTE: Information and/or codes annotated by the FAA in either blocks 3, 6, 9, and 11 are "inspected," "required/not inspected," left blank, "sat" (satisfactory), "unsat" (unsatisfactory), "X" (for out-of-tolerance condition found and not corrected during flight inspection), "C" (for out-of-tolerance condition found and corrected during flight check inspection), "SS" (for satisfactory structure), "CS" (for satisfactory clearance), numerical data, or text data.

Field 4. NOTAMs—These are the NOTAMs identified by the flight inspection crew.

Field 5. Remarks—These are the remarks noted by the flight inspection crew.

Field 6. Instrument Landing System Data-Azimuth (Part 1)—This is the pertinent data obtained during the flight inspection.

Information gathered for front course on both transmitters are altitude (one time only), course width, symmetry, modulation, clearance 150 and 90, structures Z1 through Z5, vertical polarization, alignment, identification, power ratio, and localizer only structure.

Information gathered, if checked, for back course on both transmitters are altitude (one time only), course width, symmetry, modulation, clearance 150 and 90, structures Z1 through Z3, vertical polarization, alignment, and identification.

Field 7. Instrument Landing System Data-Glide Slope (Part I)—May have information if flight checked at the same time as the localizer.

Field 8. Instrument Landing System Data-Marker Width(s)—For commissioning, reconfiguration, antenna change, or transmission line replacement/adjustment inspections, enter the outer marker (OM), middle marker (MM) and/or inner marker (IM) minor axis (on course) width in feet.

Field 9. Instrument Landing System Data-Azimuth (Part II)—In this field, more information about your localizer is listed. This field is used to report the monitor results of the front and back course azimuth. The information in this section are usable distance, power setting, course width (wide [clearances 150 and 90]), course width (narrow [clearances 150 and 90]), and alignments right/left of centerline.

Glide slope report

Because fields 1, 2, 4, and 5 require the same information as described above in the localizer report, we are only going to discuss fields 3, 7, 10, and 11 on the GS report. The ILS is composed of two systems (glide slope and localizer) and fields 6 and 9 pertain only to the localizer.

Field 3. Facility Information—The GS, for example, could have the following blocks annotated with FAA codes.

"GS," "Offset," "Other," "SIAP," "Publications," "Comd Angle" (commissioned angle), "facility status," "GS," "ILS Class Sys," "Insp Criteria," and "Rollout" annotated with FAA codes.

NOTE: Information and/or codes annotated by FAA in either blocks 3, 7, 10, and 11 are "inspected," "required/not inspected," left blank, "sat," "unsat," "X" (for out-of-tolerance condition found and not corrected during flight check inspection), "C" (for out-of-tolerance condition found and corrected during flight check inspection), "SS," "CS," numerical data, or text data.

Field 7. Instrument Landing System Data-Glide Slope (Part I)—Information gathered for both transmitters are altitude (one time only), angle, modulation, width, structure below path, symmetry, structure Z1 through Z3, and angle alignments (“B-C”, “C-T”, and “T”).

Field 8. Instrument Landing System Data-Marker Width(s)—For commissioning, reconfiguration, antenna change, or transmission line replacement/adjustment inspections, enter the OM, MM and/or IM minor axis (on course) width in feet.

Field 10. Instrument Landing System Data-Glide Slope (Part II)—This field is used to report the monitor results of the glide slope. The information included in this section is antenna and main sideband dephase, path angle lowered and raised to limit, path width narrowed and widened to limit, attenuate middle and upper antenna to limit, usable distance, power settings, clearance below path, modulation equality, phasing, front course area where phasing was conducted, mean width and symmetry, tilt, best fit straight line, GS aiming point, transverse structure, and radio altimeter.

Field 11. Instrument Landing System Data-Transverse Structure Plot—The information covered in this section is antenna type, site elevation, transmitter number used, configuration of the course and clearance transmitters, altitude used, radius in nm, flight direction (clockwise or counterclockwise), GS width, and GS angle. This check is accomplished for GSs but not normally AF GS systems. Once all this information is filled out by the flight inspection crew, the data will eventually be auto-plotted on the graph.

223. Tactical air navigation flight inspection procedures and tolerance principles

A flight inspection is the final proof of your facilities’ reliability. Special instruments and indicators aboard the flight check aircraft determine how well your facility is meeting standards. Based on the interpretation of those readings, the flight check crew determines if your system is unrestricted, restricted, or unusable. In this lesson, we examine what the flight check measures and what you need to do before, during, and after the inspection. To start, we will discuss TACAN flight inspection procedures.

Tactical air navigation flight inspection procedures

By now, you have probably been through, or heard of, at least one TACAN flight inspection. What you probably heard, or experienced, was an uneventful flight check. While uneventful on the ground, lots of action is occurring aboard the flight inspection aircraft. Except for a couple of instances, the maintenance technician doesn’t get involved unless a problem is found. In this lesson, we discuss what parameters the flight inspection aircraft checks, what the tolerances are, and what the maintenance technicians can do to correct some of the more common discrepancies. We also discuss the FAA TACAN flight inspection report, describe the information it contains and how it can help you maintain your TACAN.

Normally, a TACAN flight inspection occurs annually (periodic). Other occasions that warrant a flight inspection are antenna changes, frequency changes, or if a discrepancy is noted during a semiautomatic flight inspection (SAFI) system check. Your work center should know about when the next flight inspection is due and should coordinate through the base CATCO to determine exactly when the FAA is to perform the inspection.

Prior to the flight inspection, there are a few things for your work center to accomplish. First, make sure your radio for communicating with the flight check aircraft is working properly and set up at the site. Secondly, make printouts of the TACAN’s monitored parameters and make certain everything is well within normal parameters (finding a just in-tolerance parameter with the flight check aircraft inbound is not a good experience). If there are any alignments or adjustments that should be made, complete them prior to the flight check team’s arrival.

As we stated before, there is not much for the maintenance technician to do during a TACAN flight inspection. However, the flight inspection aircraft checks for a TACAN with a brief description of

how they perform each check, the tolerances, and what (if anything) can be done to correct an out of tolerance condition. Several aircraft runs accomplished by FAA flight inspection crew allow adjustments by airfield system technicians during the flight check such as: azimuth accuracy, azimuth error fault limit, distance accuracy, and range coverage. Refer to AFMAN 11–225 for a list of all required checks, and to TO 31R4–2FRN45–2–33GE–1–WA–1 for equipment setup during flight check.

Azimuth accuracy adjustment run

The azimuth accuracy will be checked during the flight check. The following items affect the accuracy of the azimuth:

- Constant azimuth error adjustment—If the azimuth error is out of tolerance but is constant at all radials and orbits, then the TACAN antenna may require adjustment. The antenna is adjusted by moving the magnetic North align thumbwheel switches.
- Cyclical azimuth error adjustment—An error curve that is cyclically sinusoidal with nine cycles around a complete orbit of the aircraft is caused by transmitter burst droop. An excessive burst droop may cause several tenths of a degree of azimuth error. Always check the transmitter burst amplitude variation.

Azimuth error fault limit run

The purpose of this check is to assure the monitors detect and cause an alarm at a specified shift in azimuth (1°). This run is not required for periodic flight checks, but you as the maintenance technician can request FAA flight check aircraft personnel to perform this run. This check is only accomplished during a commissioning inspection, during a periodic if the azimuth at the reference point shifts more than 1° and the monitors do not alarm, or at the request of maintenance. The check is performed while the aircraft is flying over the reference checkpoint. The azimuth deviations are noted as the maintenance personnel swing the course into alarm in both directions, and then back to normal alignment. This is accomplished by simply adjusting the azimuth thumbwheels in the modulation generator drawer.

Distance accuracy run

The inspection aircraft checks the accuracy of the TACAN's distance information in conjunction with inspection of radials, orbits, and approach procedures. The exact mileage displayed on the aircraft instruments is compared to ground checkpoints as the pilot "marks" over their position. The flight inspection may request changes in reply delay to optimize the distance accuracy and/or check the reply delay fault limits. However, DME unlocks due to high echo conditions in the radiated RF signals (usually encountered in areas where large buildings or mountains are within several miles of the TACAN site) can cause erroneous distance measurements. DME unlocks may be resolved by adjusting the echo trigger level, adjusting the echo gate width, or aligning the receiver.

Range coverage adjustment run

Maximum range is achieved with transmitter power and receiver sensitivity at maximum. To limit operational range, the sensitivity and output power may be reduced using the PC (from [System Adjustment] menu, select [Set Sensitivity] and [Set Output Power]).

Alignment orbit run

The inspection aircraft flies orbits (circles around the facility) to determine course error distribution and coverage through 360° of azimuth. It does this by using ground reference checkpoints. The circle is normally flown with a 20-mile radius. This check determines if coverage signal levels are adequate and if there are any unusable sectors. The recorded information is compared to past inspections to determine any facility changes. It can also be the basis for facility restrictions if excessive azimuth error, scalloping, roughness, or signal nulls are encountered in any sector.

Coverage orbit run

Coverage is verified in conjunction with the radial and orbit checks of the TACAN; normally performed at the commissioning flight check. It is considered satisfactory when a facility maintains continuous tracking, and course and distance information is in tolerance for a distance of 40 miles. The aircraft flies at minimum altitudes and up to five miles further on published radials. During these runs, the aircraft should maintain minimum signal strength levels with the TACAN. If unlocks occur, or excessive scalloping, roughness, or bends are encountered in any sector, restrictions are placed on the facility. Normally, any restrictions placed on a facility from the orbit inspection are caused by abnormalities in the terrain and facility siting, and there isn't much the maintenance technician can do to eliminate or improve them. Any abnormalities identified as the terrain and facility siting are difficult to eliminate.

Identification

The ID is continuously monitored during all checks. The inspectors look for the ID to have the correct code, sound clear and distinct without background noises, and not affect the facility course characteristics. The TACAN will be restricted if the ID cannot be received everywhere in the coverage area. In addition, if the TACAN is part of a VORTAC, the inspectors will check to make sure that TACAN ID is transmitted in the proper sequence with the VOR ID. TACAN ID should be transmitted once, and then VOR ID three times, and so forth. If the FAA aircraft has any problems receiving the ID, it is probably due to nulls within the radiated pattern. These nulls are usually due to reflections from the surrounding terrain or structures. There is nothing the maintenance technician can do in this case, except ensure that the ID is being transmitted. If the ID is incorrect, just change it using the maintenance computer at the site.

Reference radial

During facility commissioning, preferably 10 to 20 miles from the site, this reference is established for the basis of checking azimuth alignment error. On periodic inspections, the aircraft flies the monitored radial and checks for course error with respect to the checkpoint. The tolerance for this check is 2.5°. If the aircrew determines that the course has shifted past the tolerance, an alignment orbit will be conducted on the system. Anytime the antenna is changed, it is aligned to match the previous azimuth readings with respect to the reference reading.

Ground receiver checkpoints

A ground receiver checkpoint provides a means for aircraft to verify the accuracy of their TACAN receivers. Ground receiver checkpoints are established during the commissioning flight inspection. The points are selected on the airfield ramp or taxiways for easy access but so as not to obstruct airfield traffic. The selected points must be at least 1/2 mile from the TACAN facility. The inspection aircraft aligns itself over the selected points, facing the TACAN. It, then, records the azimuth and DME readings for publication. On subsequent inspections, the ground checkpoints are checked against their published values to ensure their accuracy. The azimuth must be within 1.5° and the DME must be within 0.2 miles of published values. The inability of a facility to provide either of the above checkpoints must not cause a restriction to be placed on the facility.

Standby power

Normally, the TACAN is checked on standby power only during a "commissioning flight inspection" to verify that no performance degradation occurs. With the transponder operating on standby power, the aircraft flies one radial checking course alignment, course structure, ID, and distance accuracy. If normal tolerances are not met, the facility cannot be certified for use on standby power.

Tactical air navigation signal parameters

In addition to checking the radiated pattern, the flight inspection aircraft also dissects the TACAN's signal, looking for any abnormalities. Abnormalities that the flight inspection aircraft looks for are detailed below.

Antenna scan rate

Any variation in the normal 900-RPM antenna scan rate causes azimuth errors. If a problem is found, it is usually corrected before the flight inspector leaves the area. The problem mostly likely leads you to the mod gen.

Squitter rate

Variations in the squitter rate beyond monitored values may cause DME unlocks and inaccurate azimuth information in the airborne receiver. Reported deviations of greater than 5.6 percent of the nominal 2,700 PPS are sent to the maintenance work center for corrective action. Such problems are usually corrected before the flight inspector leaves the area.

North reference burst

The inspection aircraft verifies the correct number of pulse pairs within this group ±1 pulse pair. Any deviations greater than this causes airborne receiver unlocks. Maintenance normally corrects this problem before the flight inspector leaves the area.

Auxiliary reference burst

Again, the inspection aircraft verifies the correct number of pulse pairs within this group ±1 pulse pair. Any greater deviations will cause airborne receiver unlocks.

Auxiliary reference burst count

Loss of any of the 8 ARBs between the north bursts causes massive course errors. If this condition is noted, maintenance is advised to take corrective action.

Modulation

Variations in the modulation level of either the 15 Hz or the 135 Hz may cause course roughness and unlocks. The modulation level is set by the mod gen.

Percent range replies

This is a check to determine the efficiency of the ground receiver. Due to the TACAN's signal priority system, under optimum conditions, only 80 percent of replies could be expected returned. Normally though, this figure is 50-70 percent. The flight check aircraft should report abnormally low readings (20-40 percent) to maintenance for possible corrective action. If a problem exists, it would most likely be with the preselector or receiver.

Tactical air navigation flight inspection report form entries

As with all flight inspections, the returned report is a listing of the findings found during that inspection. The intent of this lesson is to give you some general guidance to understand the report form and information on it. The form that will be filed with your facility is the FAA Form 8240–2, Flight Inspection Report – Rho Theta Systems, out of the FAA Order 8240.36N. **NOTE:** FAA Form 8240 series flight inspection report forms (for example, TACAN and blank forms) referenced for the remainder of this lesson are not available for public access (that is, online, and so forth). These forms can be reviewed as either a completed form in your facility records or a blank form in the FAA Order 8240.36N.

Fields 1, 2, 4, and 5 contain the same information required as described previously in the localizer report.

Field 3. Facility Information—The TACAN, for example, could have blocks "TACAN," "DME Cov" (DME coverage), "DME Acc" (DME accuracy), "voice," "standby power," "Ident" (identification), "Facility Type," "Facility Status," and "SIAP(s) verified" annotated with various FAA codes.

NOTE: Information and/or codes annotated by the FAA in either blocks 3, 6, and 7 are "sat," "unsat," "CW" (clockwise), "CCW" (counterclockwise), "S" (satisfactory), "U" (unsatisfactory), numerical data, or text data.

Field 6. Flight Inspection Data—The information gathered by the FAA are orbital data, reference radial and monitor (e.g., reference radial, checkpoint, transmitter, alignment, alarm positive and negative), date established.

Field 7. Radial Data—The service designation, radial use, azimuth, transmitter(s), MSL altitude, distance from/to, roughness and scalloping, bends, polarization, alignment error, modulations, signal strength, and interference is annotated in this section.

Field 8. Orbital Data—The transmitter number is used (normally only one), DME distance unlock, TACAN azimuth unlocks, area of interference, TACAN azimuth exceeds 2.5°, and TACAN coverage-signal strength, at which azimuth or distance unlock occurs is annotated in this section.

224. Very High Frequency Omnidirectional and Radio Range aircraft indications, flight inspection and tolerance principles

Despite the two built-in monitors and the VOR ground check kit, problems can still develop in the radiation pattern that cannot be detected from the ground. That is why at periodic intervals a flight inspection aircraft verifies the quality of the VOR's radiated pattern. Successful completion of a VOR flight inspection means everything is okay. A failed flight inspection results in an unusable facility and will probably be a significant event in your career as an airfield systems technician. It will certainly result in some in-depth maintenance and probably some long tedious hours.

Assuming you have performed the necessary maintenance, inspections, and ground checks, you're all set for the arrival of the flight inspection aircraft. While you are waiting, review the adjustments you might be asked to make during the check and be prepared to respond promptly and professionally. Nothing is more embarrassing than to be asked to make an adjustment or check and not knowing what to do. Look upon the flight inspection crew not as the enemy but as fellow technicians striving for the same results you are, which are providing accurate and safe NAVAIDs.

In this lesson, we discuss the instruments and indicators used in the aircraft during the flight inspection, some of the checks/adjustments, and some of the tolerances for the checks. To start, we will discuss VOR instruments and indicators.

Flight inspection aircraft Very High Frequency Omnidirectional and Radio Range instruments and indicators

As you know, the flight inspection is the final proof of the reliability of your facility. Instruments and indicators aboard the aircraft determine the results of the flight inspection. Familiarity with those devices can make the flight check more efficient and can help you understand how the results are determined. A list of instruments and indicators you should be familiar with is shown in the following table.

Instrument or Indicator	Function
Recorder	The FIT monitors meters in the console and graphs recorded meter readings.
To-from meter	Indicates reverse sensing from the VOR—that is, whether the pilot's course indicator needle points toward the station or 180° from where it should point. This meter is used for both the TACAN and VOR inspections.
Flag alarm meter	The flag alarm meter is a micro ammeter. A value of 240 µA or less corresponds to a partial or full showing of the red flag on the pilot's instruments. The flag reading is a direct function of both the reference and variable signals. This meter is used for both the TACAN and VOR inspections.
9,960-Hz meter	Sometimes called the 10-kHz meter. The tolerance is the same as the 30-Hz AM and FM meters.

Instrument or Indicator	Function
Crosspointer meter	A multi-range, zero-centered micro ammeter. This meter indicates how far the aircraft is off a selected course. Generally, the range is ±5.0° from the selected course and adjustable by the panel tech in the aircraft.
Automatic gain control meter (AGC)	A milli-ammeter that tells the FIT whether a sufficient RF signal is being received from the VOR facility to make the readings on the aircraft indicators reliable.
30-Hz AM meter	Also known as the variable signal indicator, this meter is connected to the variable channel of the VOR receiver. The voltage is compared against a standard level and indicates the percentage of space modulation of the VOR facility. The required space modulation is 30.0 percent ±5.0 percent.
30-Hz FM meter	Also known as the reference signal indicator, this meter is connected to the reference channel of the VOR receiver. The principals and tolerance are the same as the 30 Hz AM.

Very High Frequency Omnidirectional and Radio Range flight inspections

The periodic inspection of approach radials, such as the VOR, as well as checklist items inspected concurrently must be done on a progressive basis within a period of 12 months. Although it should be avoided, where practical, this system may allow as much as 24 months between two consecutive inspections of an en route radial. All other checklist items (terminal radials, receiver checkpoints, reference checkpoints, and so forth) are inspected periodically, not to exceed 540 days.

Except where noted, the following checks in the table below are performed during each periodic, commissioning, and site flight inspection. Special or operational flight inspection may require all or part of these checks, depending upon the information desired.

Periodic and Commissioning Checks			
Identification	Sensing and rotation	Polarization	Modulation
Approach	Missed approach	Monitors (commissioned flight inspection only).	Standby equipment (commissioned flight inspection only)
Coverage (commissioned flight inspection only)	Flyability	Voice	

Identification

Identification must be correct, clear, distinct, without background noise, and readable to the coverage limits of the station. The course indication must not be affected by identification. This check is performed while flying on course and carefully observing the course recording to determine whether the code identification affects the course indication and if there is sufficient information to identify the facility. The ID must not render any parameter unusable.

Sensing and rotation

This check is made at the beginning of the flight inspection and need not be repeated. The position of the aircraft in azimuth from the station must be known. When the aircraft is flying away from the VOR and the omnibearing selector is rotated to the azimuth of the radial being flown, the “to-from” indicator should read “from.” After you determine that sensing is correct, a counterclockwise orbit is flown to check course rotation. If the course deviation indicator can be kept centered by rotating the omnibearing selector, the radial bearing will decrease if course rotation is correct.

Polarization

This check determines if any unwanted vertical polarized electromagnetic waves are being radiated from the VOR antenna assembly. The presence of undesired vertical polarization is checked by the “attitude effect” method, and may be further investigated by the “heading effect.” We only discuss the attitude effect. Attitude effect is checked when flying directly to or from the VOR, at 5 to 20 miles

from the VOR. The flight inspection aircraft is rolled on its longitudinal axis to a 30º bank, first to one side, then to the other, and returned to straight and level flight. Crosspointer deviation as measured on the course recording indicates the amount of polarization effect. The course deviation, due to the vertically polarized signal component, should not exceed 2º.

If the polarization effect is consistent at all azimuths around the VOR, this is an indication that excessive vertically polarized signals are being radiated from the VOR antennas or associated structural elements. Ground personnel must adjust the polarizer rods to decrease the vertically polarized signal component.

The horizontally polarized VOR signal may become vertically polarized if it reflects from rough terrain or other obstructions. This condition obviously cannot be corrected, but its effect can determine the usefulness of the facility.

Modulation

During this check, the panel technician will check modulated signals on the VOR carrier signal. Prior to flight check, you will use the PIR to verify the modulated signal readings in the below table.

Modulated Signal Readings	
30 Hz AM	25–35 percent (optimum 30 percent).
9,960 Hz	20–35 percent on transmitters with voice modulation.
30 Hz FM (deviation ratio)	14.8–17.2 percent (optimum 16 percent).
9,960 Hz	20–55 percent without voice modulation.

Approach

On this check, the pilot flies the normal approach procedures for the VOR being inspected. Course, flag alarm current, and AGC are recorded and each significant point of the procedure is marked on the recording. On commissioning and site survey inspections, two additional radials (5º on each side of the approach radial) are flown and evaluated. The radial from the facility to the airport or runway is designated as the approach radial. Approach radials and procedure turn areas must meet all requirements for course characteristics as specified in tolerances for course sensitivity, polarization effect, course alignment, cone radials, and coverage. Alignment should be within +2.50°. Structure must not exceed +6.00°. The FIT then inspects from final approach fix (FAF) to MAP on every periodic inspection.

Missed approach

Meets flyability constraints until clear of obstructions and course is established.

En route

Alignment must be within +2.5°; structure must not exceed +6.0°.

Monitors

The monitors are set and checked by maintenance personnel. Flight inspection verifies monitors when practical.

Standby power

Checked by monitor for any parameter changes on approach and en route radials.

Coverage and minimum reception altitude

Measure distance coverage of the VOR and minimum reception altitude at a given point or intersection in the following manner. The minimum signal strength acceptable is 5 microvolts (µV), measured with the airborne antenna broadside to the station. This assures coverage for intersections. Coverage exists if the signal strength is above 5 µV, flag current is above 240 µA, and course structure measured radially is within tolerance at the point in question. Coverage information up to 40 miles is obtained from orbit checks. If coverage beyond 40 miles is required, the aircraft is flown radially outbound and at the point in question, the pilot flies across the course (90° to the outbound radial) for at least 5 miles on each side of the radial. Coverage must be 40 miles at the minimum instrument altitude as determined by existing criteria for terrain and obstruction clearance, except for the terminal Very High Frequency Omnidirectional and Radio Range (TVOR), which must have coverage to 25 miles.

Flyability

Any condition that may induce confusion renders the procedure or facility unusable.

Voice

Voice broadcast must be clear, distinct, and without background noise. Course characteristics must not be affected by voice. Voice must not render any parameter unusable.

Course sensitivity

Check course sensitivity on a reference radial when the aircraft is flying on course directly to or from the VOR, at a point 10 to 20 miles from the VOR, and measure the percentage of 30-Hz variable, space modulation.

Preliminary alignment

The preliminary course alignment check is usually performed during site and commissioning inspections but may be used whenever required. The reference radial is used as the reference from which a preliminary course alignment is determined. This check helps to detect gross or obvious errors in station alignment prior to proceeding with the flight inspection.

Frequency interference

Frequency interference may occasionally be encountered from sources such as industrial equipment, large hospitals, or other navigational facilities operating on the same frequency. The upper limit of tolerable audio interference—noise—is the point, at which it becomes loud enough to seriously interfere with the average pilot’s ability to understand the ID of the desired station. Any course variance or unpredictability definitely due to frequency interference is considered to be out of tolerance.

NOTE: Report any interference, no matter how small, to appropriate officials.

Orbits

Two common types of orbit checks are flown on the VOR. The *first* is the alignment orbit check, which determines the course error distribution throughout 360° of azimuth. The alignment check makes sure that the radials are symmetrical around the station. Coverage orbits are primarily done to get coverage data.

The *second* are coverage orbit checks, except high-angle orbits, which are made to determine course alignment throughout 360º of azimuth at the distance involved. The orbital flight around the VOR is the most expeditious means of checking overall course alignment. Any indication of an out-of-tolerance condition, such as areas of weak signal, scalloping, roughness, or interference, encountered during an orbit check must be further investigated by radial flight.

Orbits are normally flown CCW around the VOR and at a constant altitude. Course error cannot exceed ±2.5º. If the facility is a “T” class VOR, use a 25-mile orbit instead of the standard VOR orbit of 40 miles. This applies to an alignment orbit or a coverage orbit. For further distinction between the “L,” “H,” and “T” class checks, refer to AFMAN 11–225.

Monitor alarm check

We check the VOR monitor to determine maximum course drift required in either direction to cause a monitor alarm. A checkpoint approximately 20 miles out, and on or near the monitored radial, is selected with the course recorder running. The aircraft is flown directly over the checkpoint. The pilot has ground personnel shift the courses until the monitor alarms. Then, the pilot again goes over the checkpoint. The difference in course alignment over the checkpoint can then be read from the recordings. The monitor must alarm when course alignment shifts more than 1º from the established alignment. The procedure is repeated with the courses shifted in the opposite direction. The courses are then correctly aligned according to the ground monitor and rechecked for correct alignment. In a periodic inspection, the alignment of the monitored radial is checked, and if it has changed more than 1º since the last periodic inspection, the monitor is checked to rectify the ground-check procedures.

Terminal radials

These are the approach procedures inspected from the FAF to the MAP. The alignment tolerance is ±2.5° for the VOR. The roughness and scalloping tolerance is ±3.0° from the average course. The bend tolerance is that deviations may not exceed 3.5°. In simple terms, the bend differs from roughness or scalloping in that the deviation can be flown; the roughness and scalloping cannot.

Very High Frequency Omnidirectional and Radio Range flight inspection adjustments

Almost every inspection requires at least one adjustment to the ground NAVAID equipment. To work efficiently, you must be able to make the adjustments to the system during the flight inspection. To avoid confusion over the terms we use, you must understand the terminology used by the FIT. The adjustments you make normally during a flight inspection we can divide into two categories: signal level adjustments and azimuth adjustments. The accuracy of the omni-range courses is determined by the modulation of the reference and variable signals. Therefore, the adjustments that control these signals are very important during actual flight check runs. Refer to AFMAN 11–225 for a list of all required checks, and to TO 31R4–2FRN44–2–32GE–1–WA–1 for equipment setup during flight check.

Variable signal level adjustment (30 Hz space modulation)

During the flight inspection, the FIT may tell you to increase or decrease the variable signal level. The variable signal is a result of the space modulation of the carrier by separate sideband signals. The separate sidebands amplitude-modulate the carrier to a depth of 30 percent. Because the sideband card supplies the power for the separate sideband signals, any adjustment to the sideband card controls the amount of variable signal measured at the panel operator’s console. Course sensitivity is also adjusted by varying the power output of the sideband card.

Subcarrier signal level adjustment (9,960 Hz AM modulation and FM deviation)

Another signal level that must be accurately checked is the 9,960-subcarrier signal level. The level of the signal from the subcarrier generator determines the percentage of AM of the carrier signal. Remember, the carrier is amplitude modulated to a depth of 30 percent. Frequently, you hear the subcarrier level adjustment referred to as the 9,960 adjustment, or 10-kHz adjustment. Regardless of the term used, the panel operator wants you to adjust the factor of the 10-kHz modulated waveform.

Azimuth adjustment (monitor alarm verification)

During the flight inspection, the FIT may find that the VOR courses should be shifted in either a positive or negative direction. A system adjustment—the transmitter station azimuth adjusts—permits you to do that, thereby correcting for any misalignment. Then, input the new reference radial for the

monitor. This check is similar to the thumbwheel switches of the mod gen for the TACAN, but this azimuth check is done with the computer.

Very High Frequency Omnidirectional and Radio Range flight inspection tolerances

All VORs must meet operating tolerances to be classified as UNRESTRICTED. If a specific area of a facility does not meet these tolerances, the flight inspection agency may, after proper coordination, prescribe the use of the facility on a restricted basis. Classification of the facility based on flight inspection results is the responsibility of the flight inspector. The tolerances listed in this lesson are not all inclusive. To get a more detailed listing, refer to AFMAN 11–225. The checks performed on the VOR must meet the following ten tolerances.

Identification

The ID code must be correct, clear, distinct, and without background noise to the coverage limits of the facility. Course structure must not be affected when ID is transmitted.

Voice

Voice transmissions on the VOR, where this function is installed, must be clear, distinct, and without background noise. Simultaneous voice transmissions and code identification must be at approximately the same amplitude. Voice modulation must not cause disturbance of the course structure in excess of ± 5 µA. Voice transmission must be clear and readable to at least 40 miles at minimum en route altitude (MEA) for L and H facilities and at least 25 miles for T CAT facilities.

Airborne receiver checkpoint

During the commissioning flight inspection, the flight inspection aircraft identifies a prominent ground checkpoint, near an airfield, so aircraft can access it easily. This checkpoint is normally in an area and at an altitude that will not interfere with normal air traffic patterns. The flight inspection aircraft records the azimuth and DME at a particular altitude for this point. This information is then published in the facility listings. On subsequent inspections, the airborne receiver checkpoint is checked against its published values to ensure its accuracy. The azimuth must be within 1.5° of published value, and the DME must be within .2 nm of published value.

Course sensitivity

Course sensitivity must be 20° ±2°. The individual modulation levels for the 30-Hz AM, 30-Hz FM and 9,960-Hz signal must be 25 to 35 percent, with 30 percent being optimum.

Polarization effect

The maximum course deviation caused by the effects of vertical polarization is 2.0°.

Radials

Course structure and alignment of radials must be within the limitations listed in the next table.

Radial	Limitation
Alignment	Electronic radials must be within 2.5° of the correct magnetic azimuth.
Roughness and scalloping	Momentary deviations of the course due to roughness, scalloping, or combinations thereof must not exceed 3.0° from the average course.
Bends	Deviations of the course due to bends must not exceed 3.5° from the computed average course alignment and must remain within 3.5° of the correct magnetic azimuth.
Flyability	The effects of any one, or combination of these conditions, even though in tolerance, must not render the radial unusable or unsafe.

Orbits

Any indication of an out-of-tolerance condition (that is, alignment, roughness, scalloping, bends) noted during orbital flight must be probed by radial flight for final confirmation.

Coverage

Coverage must be 40 miles at the minimum altitude as determined by existing criteria for terrain and obstruction clearance; for “T” CAT facilities, coverage must be 25 miles. Minimum signal strength is 5 µV AGC and in-tolerance crosspointer action (flag alarm current above 240 µA for older generation receivers).

Frequency interference

Frequency interference must not reduce the pilot’s ability to audibly identify the facility or cause any apparent affect to the VOR course within the operational service volume of the facility.

Monitor

The monitor must alarm when the course shifts more than 1.0° from the alignment established for the reference checkpoint.

Very High Frequency Omnidirectional and Radio Range flight inspection report form entries

As with all flight inspections, the returned report is a listing of the findings found during that inspection. The intent of this section is to give you some general guidance to understand the report form and the information on it. The form that will be filed with your facility is the same as for the TACAN, FAA Form 8240–2 out of the FAA Order 8240.36N.

NOTE: FAA Form 8240 series flight inspection report forms (e.g., VOR and blank forms) referenced in this lesson are not available for public access (that is, online, and so forth). These forms can be reviewed as either a completed form in your facility records or a blank form in the FAA Order 8240.36N.

Fields 1, 2, 4, and 5 contain the same required information as described previously in the localizer report.

Field 3. Facility Information—The VOR, for example, could have blocks “VOR”, “DME Cov” (DME coverage), “DME Acc” (DME accuracy), “voice”, “standby power”, “Ident” (identification), “Facility Type”, “Facility Status”, and “SIAP(s) verified” annotated with various FAA codes.

NOTE: Information and/or codes annotated by FAA in either blocks 3, 6, and 7 are “sat,” “unsat,” “CW,” “CCW,” “S,” “U,” numerical data, or text data.

Field 6. Flight Inspection Data—The information gathered by the FAA are orbital data, reference radial and monitor (for example, reference radial, checkpoint, transmitter, alignment, alarm positive and negative), and date established.

Field 7. Radial Data—In this section, the service designation, radial use, azimuth, transmitter(s), MSL altitude, distance from/to, roughness and scalloping, bends, polarization, alignment error, modulations, signal strength, and interference is annotated.

Field 8. Orbital Data—In this section, the transmitter number used, DME distance unlock, area of interference, VOR azimuth exceeds 2.5°, and VOR coverage-signal strength (documented levels below –93dbm) is annotated.

Self-Test Questions

After you complete these questions, you may check your answers at the end of the unit.

218. Instrument landing system standards

1. What does a CAT I ILS provide?

2. How far from the runway threshold is ILS point A located?

3. Which ILS point is located 2,000 feet from the stop end of the runway?

4. Which ILS approach zone changes, depending on the CAT of ILS involved?

5. Once the detected audio level in sector 1 reaches a level of 0.175 DDM, what level should it maintain or exceed to the end of sector 1?

6. What is the minimum detected audio level in sector 2?

7. Which localizer clearance sector includes the area located between 35° off-center to a point 90° off centerline?

219. General flight inspection information

1. What are the five basic types of flight inspections?

2. When is a commissioning flight inspection performed?

3. Under what circumstances is a special flight inspection performed?

4. When does a surveillance inspection become a special inspection?

5. What does the classification unrestricted mean?

6. How is a facility classified that does not meet its established tolerances in specific areas?

7. If a flight inspector finds a facility to be unsafe, how would that individual classify the facility?

8. What are the basic responsibilities of a flight inspector in performing a flight inspection?

9. At what time does the workcenter supervisor make sure that all ground calibrations are performed?

10. Describe the responsibilities of the flight inspection technician.

11. Explain the purpose of AFIS.

12. Which altitude or altitudes are reported for flight inspections?

13. What are bends?

14. Describe course width (course sensitivity).

15. Explain roughness.

16. Explain structure.

220. Localizer flight inspection procedures and tolerance principles

1. Name the four flight check runs accomplished by the FAA.

2. Why is the CRS wide/CLR wide run done?

221. Glide slope flight inspection procedures and tolerance principles

1. Name the three flight check runs accomplished by the FAA.

2. What should the monitors read during a wide alarm run?

3. What elements make up structure?

222. Instrument landing system flight inspection report form entries

1. What blocks are in “Field 1”?

2. What fields have the same information required for both the localizer and the glide slope?

223. Tactical air navigation flight inspection procedures and tolerance principles

1. What are the two items accomplished before flight check?

2. When an orbit is flown, at what distance is it and what is being checked?

3. During a ground receiver check, what are the azimuth and DME tolerances?

4. Name the TACAN signal parameters.

224. Very High Frequency Omnidirectional and Radio Range aircraft indications, flight inspection and tolerance principles

1. In what two ways does a flight inspection technician monitor received data?

2. What does the crosspointer meter indicate?

3. How is the presence of undesired vertical polarization checked?

4. What is the upper limit of tolerable frequency interference?

5. What two common types of orbits are flown when flight checking a VOR?

6. What is the coverage for L, H, and T class facilities?

7. What determines the accuracy of the omni-range courses?

8. How is the VOR's course sensitivity adjusted?

9. During an airborne receiver check, what are the azimuth and DME tolerances?

10. What is the optimum modulation level for the 30-Hz AM, 30-Hz FM, and 9960 Hz?

11. What is the maximum deviation of the course caused by the effects of vertical polarization?

12. When must the monitors alarm?

3–2. Historical and Facility Records

Career Development Course (CDC) 1C853A gave you a brief overview of records created or maintained by a work center. In this section, our focus is limited to and expanded upon to cover only those records maintained to aid in equipment and system maintenance.

225. Maintaining historical and facility records

Records maintenance is an important responsibility for any maintenance technician. Just as you would keep maintenance and repair records on a car or other high value item to prove its integrity, the same is true for AF systems and equipment. Besides proving integrity, keeping good maintenance records can save time and money by minimizing troubleshooting time and identifying trends in equipment repairs. For example, three replacements of the same circuit card in a radio over a 6-month period may be an indication of an underlying cause. With multiple technicians and pieces of like equipment, the recurring connection may not be made for some time; however, a quick look at the maintenance record would immediately solve any speculations. In the following lessons, we briefly touch on some of your responsibilities for preserving this valuable information, starting with discussing historical records.

Historical records

Detailed historical record guidance is located in TO 00–20–1, *Aerospace Equipment Maintenance Inspection, Documentation, Policies, and Procedures*. This is the source document for all AF maintenance activities. TO 00–33A–1001, *General Communications Activities Management Procedures and Practice Requirements*, clarifies and expands on those areas most applicable to communications work centers.

Records are required for all mission capable (MICAP) reportable, command supported, and other equipment designated by the item, system, or program managers. These records are located in three locations in a typical airfield systems work center: (1) the workcenter centralized records, (2) each equipment facility or equipment shelter, and (3) the integrated maintenance data system (IMDS). The centralized records location will have a separate file for each system or end item maintained and will

cross-reference any additional items kept at equipment facilities or shelters. Each historical file must be reviewed for accuracy annually. The reviews must also be documented in either IMDS or in the centralized record folders. The following, though not all-inclusive, is a list of mandatory items to file in the historical records:

- Time compliance TO compliance, if not recorded in IMDS.
- Removal and replacement of critical subsystems or work unit coded items, to include reason for removal and brief narrative as to the maintenance performed on the component.
- Information in regards to corrosion; its location, extent, and treatment accomplished or required.
- Circumstances regarding mishaps; the extent of damage, repair authority, repairing activity, and date of repair and repairs accomplished.
- Weather damage.
- Variances records, approved or not, that change the standard configuration according to technical/commercial manual or original installation paperwork.
- For facilities requiring flight check prior to commissioning, enter the initial flight check data, along with any significant actions required to pass the initial flight check.
- Removal or decommissioning of end items or equipment, including the date it was packed for shipment or placed in storage.
- Significant maintenance actions and circumstances requiring emergency maintenance by depot, engineering installation squadrons, special communications teams (SCT), or contractors.
- Chronic problems and any condition or maintenance action that could affect future maintenance of the equipment.

Now that you have a basic understanding of the information you must preserve as historical records and where they are kept, let's look at the requirements for those records not kept in the centralized facility records, also referred to as "facility records."

Facility records

TO 00–33A–1001 requires creation and maintenance of a facility record for each air traffic control and landing systems (ATCALS) facility. The facility record is a transitory portion of the equipment historical record and is kept in the facility where the equipment is installed. When data is superseded, the old data will be retained in the workcenter equipment historical file. The equipment historical file is maintained for the entire life cycle of the equipment. Each facility record will contain the following information:

Tab 1, Reference Data—This section contains the reference flight inspection report and all data recorded following the reference flight inspection. Each page must be clearly marked at the top, "REFERENCE DATA." When references change because of maintenance, parts replacement, and so forth, make a single line in red pen through the changed item on the original reference data worksheet; annotate the new reference and the date the change was made.

Tab 2, Preventive Maintenance Inspection Data Collection—This section contains data recorded during PMIs as required by applicable maintenance TOs. All required blocks on the appropriate forms must be completed. An explanation is required in the remarks section of the form if required data is not recorded. The remarks section of the form may be used to document trends or adjustments made during PMIs. If adjustments are made during the PMI, the final reading will be recorded

Tab 3, Periodic Flight Inspection Reports—This section contains the latest two periodic flight inspection reports and any applicable facility data (validate accuracy and currency with terminal instrument procedures).

Tab 4, Preventive Maintenance Inspection Ground Check—This section contains data recorded during PMIs to determine radiation characteristics as required by TOs.

Tab 5, Other Data—In this section, include any site information not filed elsewhere, (such as, Mobile Depot Maintenance, SCT, ATCALS evaluations, Air Force Engineering Technical Service trip reports, unique facility information, and so forth).

Self-Test Questions

After you complete these questions, you may check your answers at the end of the unit.

225. Maintaining historical and facility records

1. What TO(s) contains the requirements for maintaining historical records?

2. What items require creation and maintenance of a historical record?

3. Where are historical records kept?

4. How often must historical records be reviewed?

5. Where are reviews documented?

6. Emergency maintenance, which must be documented is historical records, is performed by which personnel?

7. Which publication contains detailed information on facility record maintenance requirements?

8. Where are facility records kept?

9. How long are historical records maintained?

10. What information is contained in “Tab 1” of a facility record?

11. What information is contained in “Tab 5” of the facility record?

Answers to Self-Test Questions

218

1. Acceptable guidance information from the point where the pilot intercepts the ILS to the point where the localizer course line intersects the glide path at a height of 100 feet above the horizontal plane containing the runway threshold.
2. 4 nm.
3. Point E.
4. Zone 3.
5. 0.180 DDM.
6. 0.155 DDM.
7. Sector 3.

219

1. (1) Site evaluation.
   (2) Commissioning.
   (3) Periodic.
   (4) Special.
   (5) Surveillance.
2. Before commissioning all newly installed NAVAID equipment.
3. Equipment malfunctions, changes in terrain, aircraft accident involving NAVAIDs, and any major maintenance or modification to the equipment.
4. If an out-of-tolerance condition is found.
5. The facility is fully usable within its service area and meets all tolerances.
6. Restricted.
7. Unusable.
8. To make sure that all airborne equipment is calibrated, ground personnel is briefed of intended actions, the flight inspection crew is briefed, and pertinent flight information is obtained.
9. Before the flight inspection aircraft arrives.
10. This individual gather and analyze the data being transmitted by your facility and determines its usability.
11. AFIS is a method of inspecting a facility by using an on-board INS as a reference and GPS. The INS tells the flight inspection computer where it is. The computer analyzes the difference between this information and what is received from your facility to determine the results.
12. MSL.
13. Slow excursions of the course.
14. The angular deviation required in order to produce a full-scale course deviation indication of the airborne navigational instrument.
15. Rapid irregular excursions of the electromagnetic course or path.
16. Structure describes the excursion characteristics of a navigation on-course or on-path signal which includes bends, scalloping, roughness and other aberrations.

220

1. (1) Low approach.
   (2) Normal width.
   (3) Course wide/clearance wide.
   (4) Normal width and symmetry run.
2. Performed to make sure the monitors detect an alarm condition (resulting in shutdown) before the radiated signal goes out of tolerance.

221

1. Wide alarm, advance and retard phase, and normal width/angle/symmetry/structure below path run.
2. 0.155 DDM.
3. Roughness, bends, or scalloping.

222

1. Ident, owner, state, country, region, inspection date(s), location, inspection type, CAT, and runway.
2. 1, 2, 4, and 5.

223

1. First, make sure your radio for communicating with the flight inspection aircraft is working properly and set-up at the site. Secondly, make printouts of the TACAN's monitored parameters, and make certain everything is well within normal parameters.
2. 20 mile radius from station; if coverage signal levels are adequate, and if there are any unusable sectors.
3. 1.5 degrees; 0.2 miles.
4. (1) Antenna rotation speed.
   (2) Squitter rate.
   (3) North reference burst.
   (4) ARB.
   (5) ARB count.
   (6) Modulation.
   (7) Percent range replies.

224

1. Checks meters and hard copy recording of the meter indications.
2. How far the aircraft is off a selected course.
3. L = 40 miles, H = 40 miles, T = 25 miles.
4. By the attitude effect.
5. The point at which it becomes loud enough to seriously interfere with the average pilot's ability to understand the identification of the desired station.
6. Alignment or coverage orbits.
7. The modulation of the reference and variable signals.
8. By varying the power output of the sideband card.
9. 30 percent.
10. 1.5 degrees; .2 nm.
11. 2.0°.
12. When the course shifts more than 1.0° from the alignment established for the reference checkpoint.

225

1. TO 00–20–1, *Aerospace Equipment Maintenance Inspection, Documentation, Policies, and Procedures,* and TO 00–33A–1001, *General Communications Activities Management Procedures and Practice Requirements.*
2. All MICAP reportable, command supported, and other equipment designated by the item, system, or program managers.
3. (1) The workcenter centralized records.
   (2) Each equipment facility or equipment shelter.
   (3) The IMDS.
4. Annually.
5. In IMDS or in the centralized record folders.
6. Depot, engineering installation squadrons, special communications teams, or contractors.

7. TO 00–33A–1001, *General Communications Activities Management Procedures and Practice Requirements.*
8. In the facility where the equipment is installed.
9. The entire life cycle of the equipment.
10. The reference flight inspection report and all data recorded following the reference flight inspection.
11. Any site information not filed elsewhere, (such as, mobile depot maintenance, SCT, ATCALS evaluations, Air Force Engineering Technical Service trip reports, unique facility information, and so forth).

Unit Review Exercises

Note to Student: Consider all choices carefully, select the *best* answer to each question, and *circle* the corresponding letter. When you have completed all unit review exercises, transfer your answers to the Field-Scoring Answer Sheet.

Do not return your answer sheet to the Air Force Career Development Academy (AFCDA).

79. (218) When operating an Instrument Landing System (ILS) as category II, the pilot *must* be able to fly inbound to a point of interception where the localizer course line intersects the glide path at a point above the
    a. inner marker.
    b. middle marker.
    c. runway threshold.
    d. east end of the runway.

80. (218) Instrument Landing System (ILS) points A, B, C, D, and E are used to define the limits of
    a. coverage.
    b. approach zones.
    c. touchdown areas.
    d. category I, II, and III systems.

81. (219) If a facility does *not* meet established tolerances within some specific locations of the service area, the inspector classifies it as
    a. unusable.
    b. restricted.
    c. unreliable.
    d. unrestricted.

82. (219) In flight inspection terminology, slow excursions of the electromagnetic course or path are called
    a. course scalloping.
    b. alignment error.
    c. roughness.
    d. bends.

83. (219) In flight inspection terminology, rhythmic excursions of the electromagnetic course or path defines
    a. course scalloping.
    b. alignment error.
    c. roughness.
    d. bends.

84. (220) During a localizer low approach run flight check, what is the plus/minus percent of the modulation level tolerance for a CAT I Instrument Landing System (ILS)?
    a. 0.2.
    b. 0.4.
    c. 2.0.
    d. 4.0.

85. (220) Which level is *not* measured during a localizer normal width run flight check?
    a. Course width.
    b. Identification.
    c. Clearances.
    d. Symmetry.

86. (220) What is the flight check plus/minus percentage tolerance for the localizer width check?
    a. 17 of the engineered width.
    b. 7.5 of the engineered width.
    c. 17 of the commissioned width.
    d. 7.5 of the commissioned width.

87. (221) The glide slope (GS) flight inspection procedure that checks phasing of the sideband-only (SBO) signal in relationship to the carrier-plus sideband (CSB) signal is
    a. structure.
    b. modulation level.
    c. advance and retard.
    d. normal width/angle/symmetry.

88. (221) Which percent of the commissioned angle is the tolerance for the glide angle?
    a. 7.5 below and 10 above.
    b. 9.0 below and 10 above.
    c. 9.5 below and 11 above.
    d. 17.0 below and 40 above.

89. (222) Which Federal Aviation Administration (FAA) flight check inspection report form is used for the localizer?
    a. 8240–2.
    b. 8240–3.
    c. 8240–6.
    d. 8240–8.

90. (223) Which Federal Aviation Administration (FAA) flight check inspection report form is used for the tactical air navigation (TACAN)?
    a. 8240–1.
    b. 8240–2.
    c. 8240–11.
    d. 8241–22.

91. (224) Which meter indicates reverse sensing from the Very High Frequency Omnidirectional and Radio Range (VOR)?
    a. To-from.
    b. Flag alarm.
    c. Crosspointer.
    d. Automatic gain control (AGC).

92. (224) The flight check meter that indicates a sufficient radio frequency (RF) signal is being received from the Very High Frequency Omnidirectional and Radio Range (VOR) facility to make readings on the aircraft indicators reliable is the
    a. to-from.
    b. flag alarm.
    c. crosspointer.
    d. automatic gain control (AGC).

93. (224) Which Very High Frequency Omnidirectional and Radio Range (VOR) flight check determines if any unwanted vertical or horizontally polarized electromagnetic waves are being radiated from the VOR antenna assembly?
    a. Rotation.
    b. Polarization.
    c. Course sensitivity.
    d. Frequency interference.

94. (224) How many miles *must* the Terminal Very High Frequency Omnidirectional and Radio Range (TVOR) cover?
    a. 15.
    b. 20.
    c. 25.
    d. 30.

95. (224) The two categories that flight check adjustments normally encounter during a flight inspection are signal level and
    a. waveform.
    b. azimuth.
    c. voltage.
    d. power.

96. (224) At which depth percentage is the Very High Frequency Omnidirectional and Radio Range (VOR) carrier amplitude modulated by the sideband signals?
    a. 15.
    b. 20.
    c. 30.
    d. 40.

97. (224) A Very High Frequency Omnidirectional and Radio Range (VOR) that meets *all* operating tolerances is classified as
    a. unusable.
    b. restricted.
    c. satisfactory.
    d. unrestricted.

98. (224) The *maximum* degree deviation of the Very High Frequency Omnidirectional and Radio Range (VOR) course caused by polarization shall *not* exceed
    a. 1.
    b. 2.
    c. 3.
    d. 3.5.

99. (225) The publication containing detailed historical record guidance is
    a. Air Force Manual (AFMAN) 21–2116.
    b. Technical Order (TO) 00–33A–1001.
    c. TO 00–20–1.
    d. TO 00–5–1.

100. (225) How many previous flight inspections *must* be kept in the facility records?
    a. All flight inspections.
    b. Only the most recent.
    c. The latest three.
    d. The latest two.

Glossary of Abbreviations and Acronyms

µs	microsecond
°	degree
µA	microampere
µV	microvolt
Ω	ohm
A	amperes
ABNML	abnormal
AC	alternating current
AF	Air Force
AFIS	automatic flight inspection system
AFMAN	Air Force manual
AGC	automatic gain control
AGL	above ground level
AIDS	auxiliary (azimuth), identification, distance, and squitter
AM	amplitude modulation
APCU	amplitude phase control unit
ARB	auxiliary reference burst
ASR	air surveillance radar
ATC	air traffic control
ATCALS	air traffic control and landing systems
B/C	back course
BITE	built-in test equipment
CAT	category
CATCO	chief of air traffic control operations
CCW	counterclockwise
CDC	Career Development Course
CE	capture-effect
CL	centerline
CLR	clearance
CODEC	coder/decoder
Comd Angle	commissioned angle

Comd width	commissioned width
COURSE DDM	course difference in depth of modulation
CPU	central processing unit
CRS	course
CS	satisfactory clearance
CSB	carrier-plus sideband
CW	clockwise
D/A	digital/analog
dB	decibel
dBM	decibels referenced to a 1-milliwatt standard
DC	direct current
DDM	difference in depth of modulation
DIP	dual in-line processor
DME	distance measuring equipment
EMI	electromagnetic interference
EXEC BYP	executive bypass
F	Fahrenheit
F/C	front course
FAA	Federal Aviation Administration
FAF	final approach fix
FCPU	facility central processing unit
FCR	flight check radio
FIP	flight inspection pilot
FIT	flight inspection technician
FM	frequency modulated
FoS	Family of Systems
FREQ SEP	frequency separation
GPS	Global Positioning System
GS	glide slope
GSI	glide slope intercept
Hz	hertz
ICAO	International Civil Aviation Organization
ID	identification

ID % OF MOD	identification percent of modulation
IF	intermediate frequency
ILS	instrument landing system
ILS Class Sys	instrument landing system classification system
IM	inner marker
IMDS	integrated maintenance data system
INS	Inertial Navigation System
Insp Criteria	inspection criteria
kHz	kilohertz
kW	kilowatt
LDA	localizer directional aid
LED	light emitting diode
LO	local oscillator
LPD	log-periodic dipole
LSA	lower standard altitude
MAJCOM	major command
MAP	missed approach point
MDT	maintenance data terminal
MEA	minimum en route altitude
MHz	megahertz
MICAP	mission capable
MLS	microwave landing system
MM	middle marker
MOD %	percent of modulation
mod gen	modulation generator
Mon	monitored
mph	miles per hour
ms	millisecond
MSL	mean sea level
mW	milliwatt
NAVAID	navigational aid
NDB	nondirectional beacon
nm	nautical mile

NOTAM	notice to Airmen
NR	null-reference
NRB	north reference burst
OJT	on-the-job training
OM	outer marker
PAR	precision approach radar
PC	personal computer
PIR	portable instrument landing system receiver
PMI	preventive maintenance inspection
PPS	pulses per second
RAM	random access memory
RAPCON	radar approach control
RAWS	Radar, Airfield & Weather Systems
RCDU	remote control/display unit
RDU	radio frequency detector unit
REF	reference
RF	radio frequency
RFA	radio frequency amplifier
RMC	regional maintenance center
RMS	root mean square
RMWC	remote maintenance work center
RSI	remote status indicator
S	satisfactory
SAF	station assigned frequency
SAFI	semiautomatic flight inspection
sat	satisfactory
SB1	sideband 1
SB2	sideband 2
SBO	sideband-only
SBP	structure below path
SCT	special communications team
SDF	simplified directional facility
SDM	sum of depth of modulation

SFS	synthesized frequency source
SIAP	standard instrument approach procedure
SPAR	system performance analysis rating
SS	satisfactory structure
STDBY	standby
TACAN	tactical air navigation
TO	technical order
TVOR	terminal Very High Frequency Omnidirectional and Radio Range
Tx	transmit
U	unsatisfactory
unsat	unsatisfactory
UPS	uninterruptable power supply
USAF	United States Air Force
V	volt
VAC	volts alternating current
VDC	volts direct current
VGSI	visual glide slope indicator
VHF	very high frequency
VOR	Very High Frequency Omnidirectional and Radio Range
VORTAC	Very High Frequency Omnidirectional and Radio Range Tactical Air Navigation
V-Pre Mod	pre-regulated voltage modulation
VSWR	voltage standing-wave ratio
W	watt
WAM	wide area multilateration
WIDTH DDM	half-width point difference in depth of modulation

Student Notes

Student Notes

AFSC 1C853
1C853B 01 1908
Edit Code 01