1C853B 01 S01 1909

CDC 1C853B

Radar, Airfield & Weather Systems Journeyman

Supplementary Material for Volume 1

Foldouts 1-12

Air Force Career Development Academy
The Air University
Air Education and Training Command

Table of Foldouts

Foldout 1. Transmitter block diagram.

Foldout 2. Transmitter filter/amplifier A4 module.

Foldout 3. Transmitter driver power amplifier A10A1.

Foldout 4. Transmitter control, thermal/detector modulation percentage/coaxial relay/control keyer inhibit A7 module.

Foldout 5. Transmitter control radio frequency/modulator A6 module.

Foldout 6. Receiver wiring block diagram.

Foldout 7. UHF receiver mixer/multiplier A2 module.

Foldout 8. Receiver intermediate frequency amplifier and detector A6 module.

Foldout 9. Receiver preamplifier, audio frequency/AGC-squelch A3 module.

Foldout 10. AN/GRC-171 Wiring diagram.

Foldout 11. AN/GRC-171 Front, top, back diagrams.

Foldout 12. AN/GRC-171/211 Block diagrams.

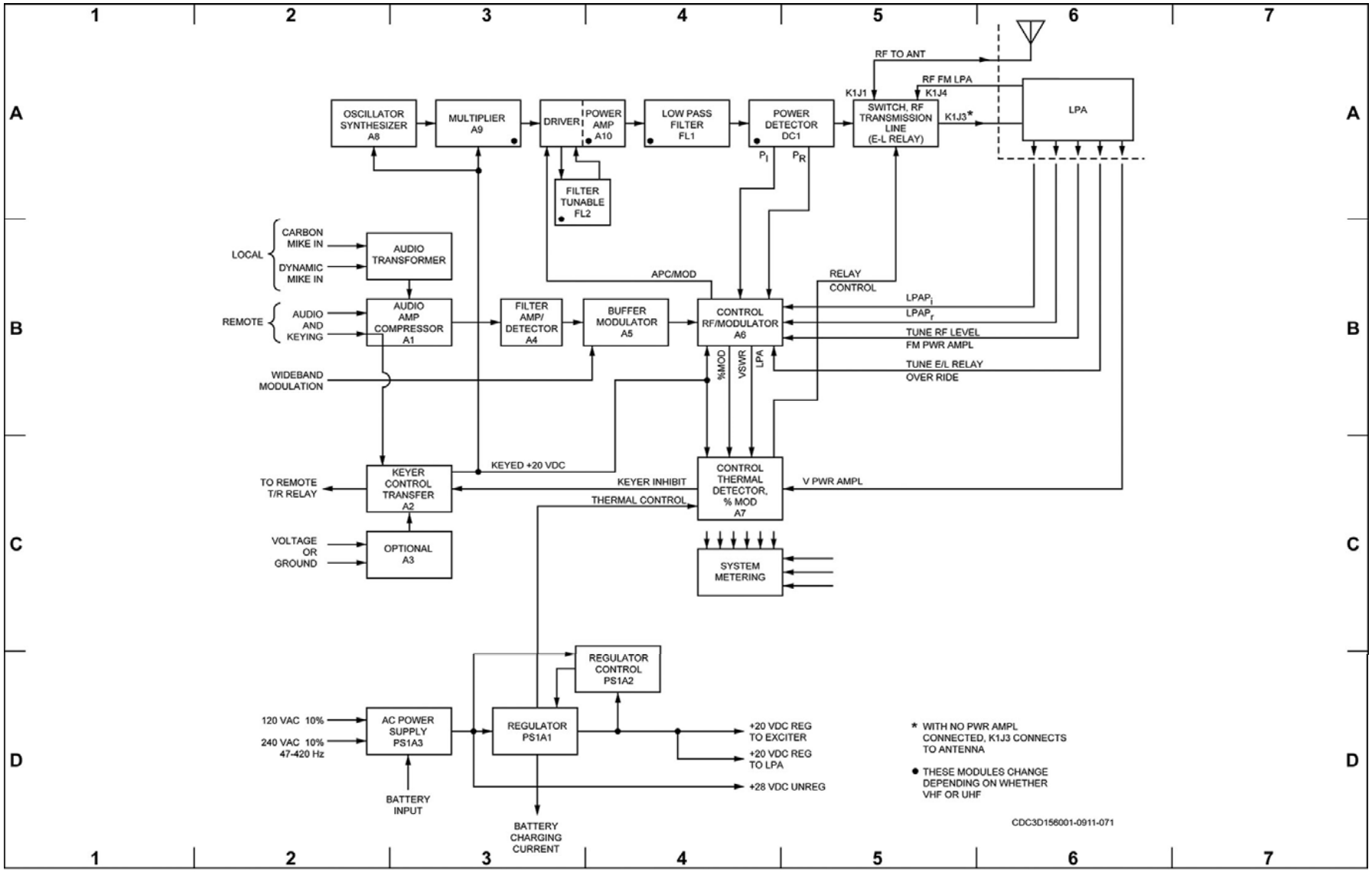

Foldout 1. Transmitter block diagram.

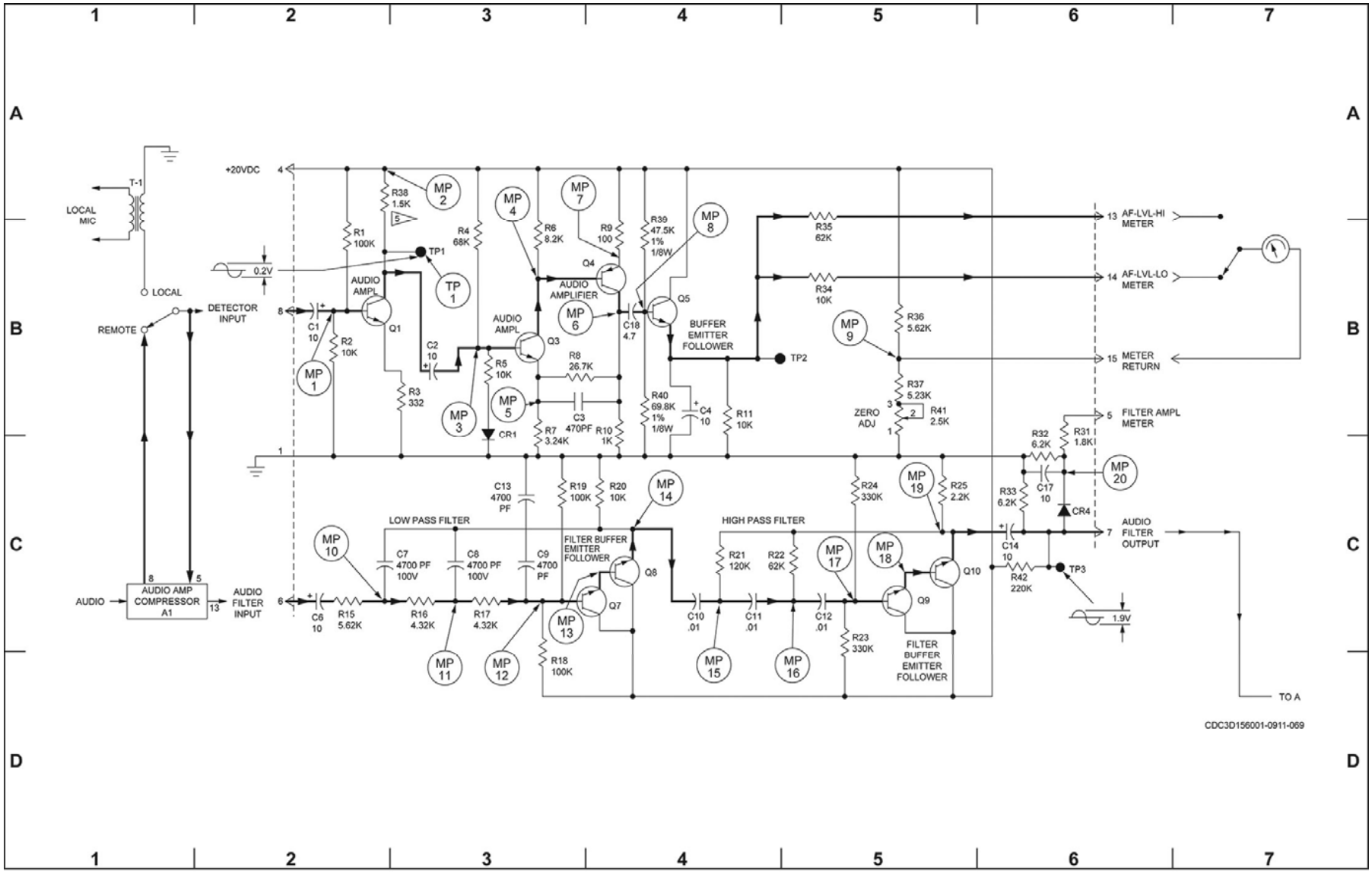

Foldout 2. Transmitter filter/amplifier A4 module.

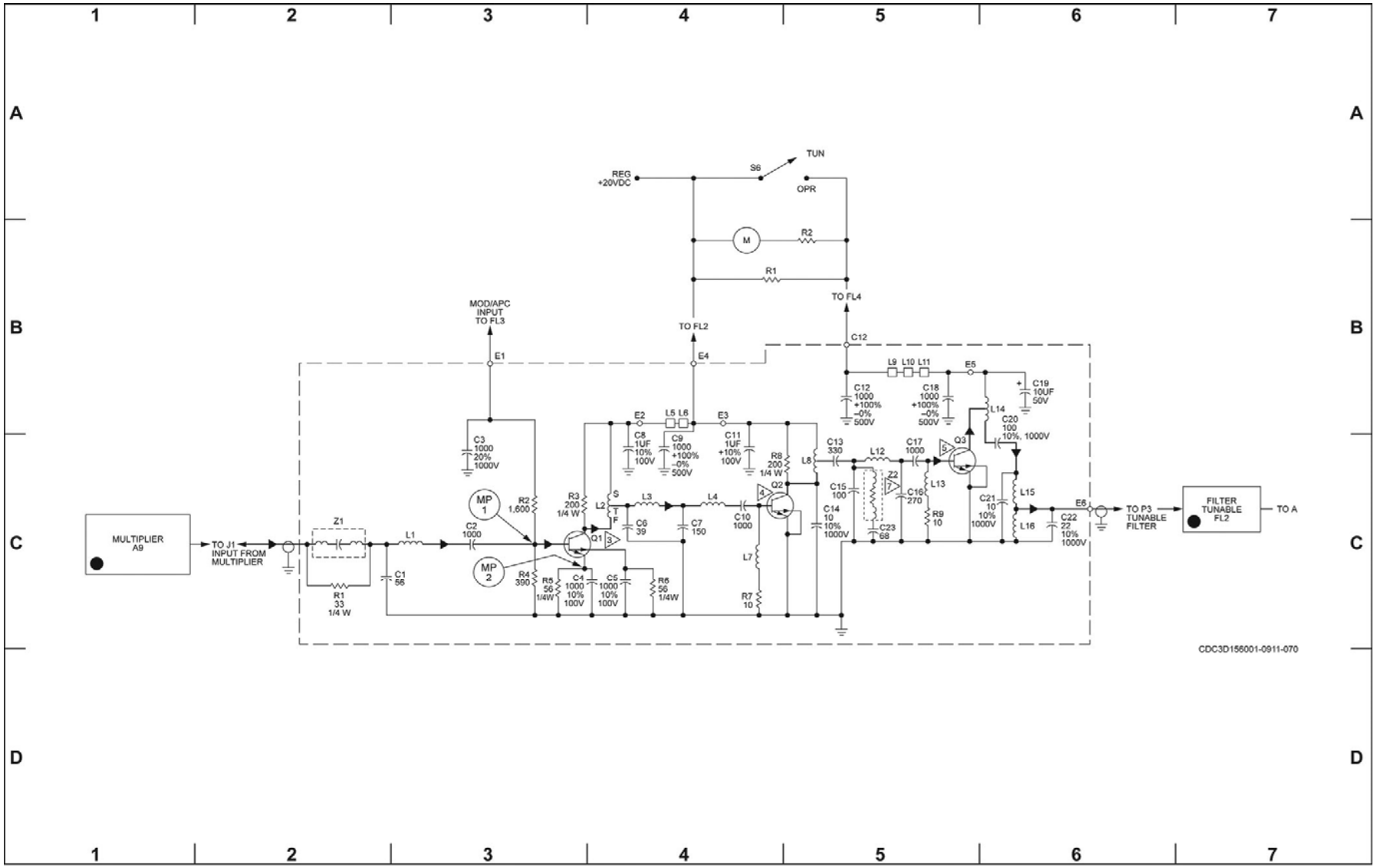

Foldout 3. Transmitter driver power amplifier A10A1.

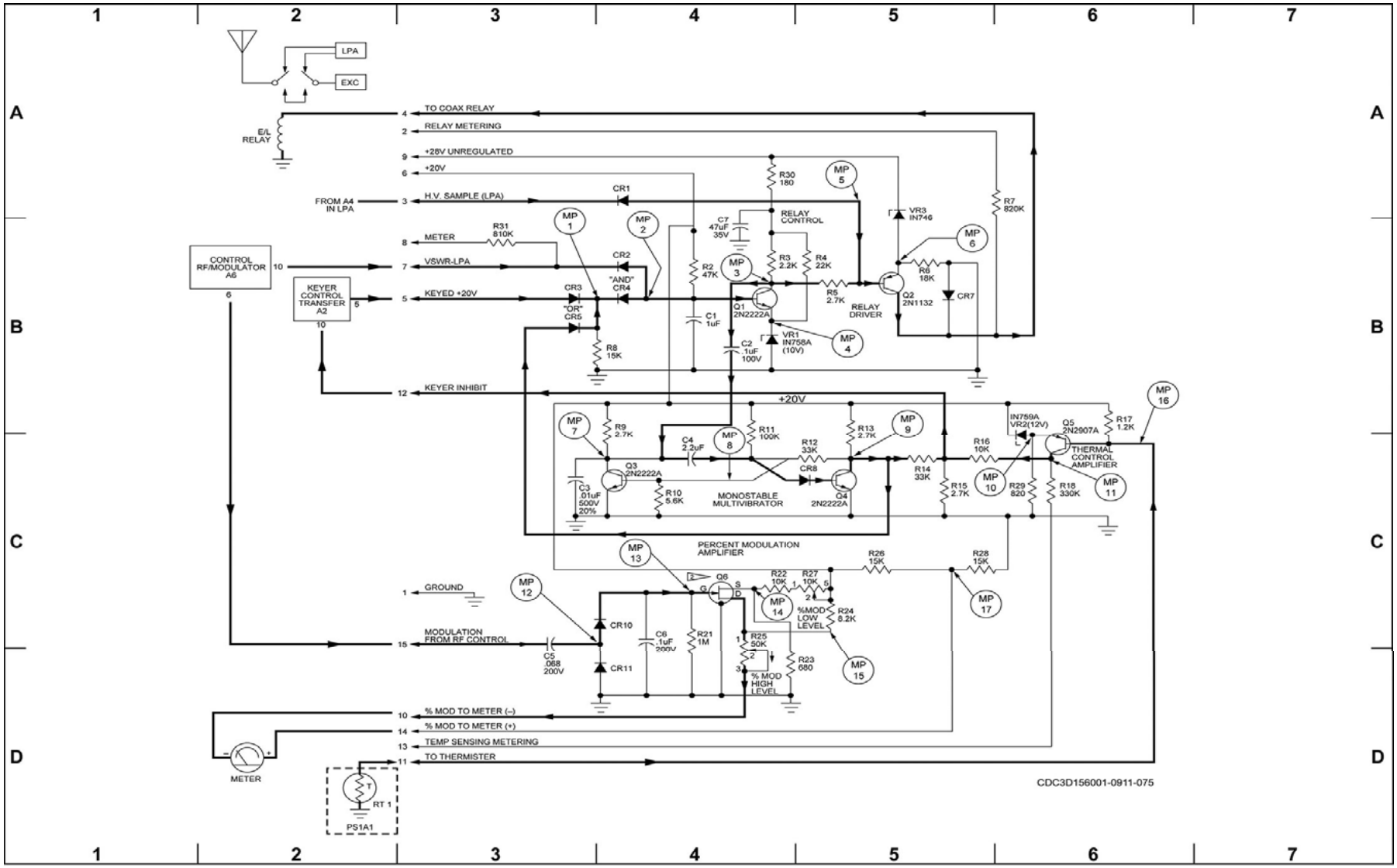

Foldout 4. Transmitter control, thermal/detector modulation percentage/coaxial relay/control keyer inhibit A7 module.

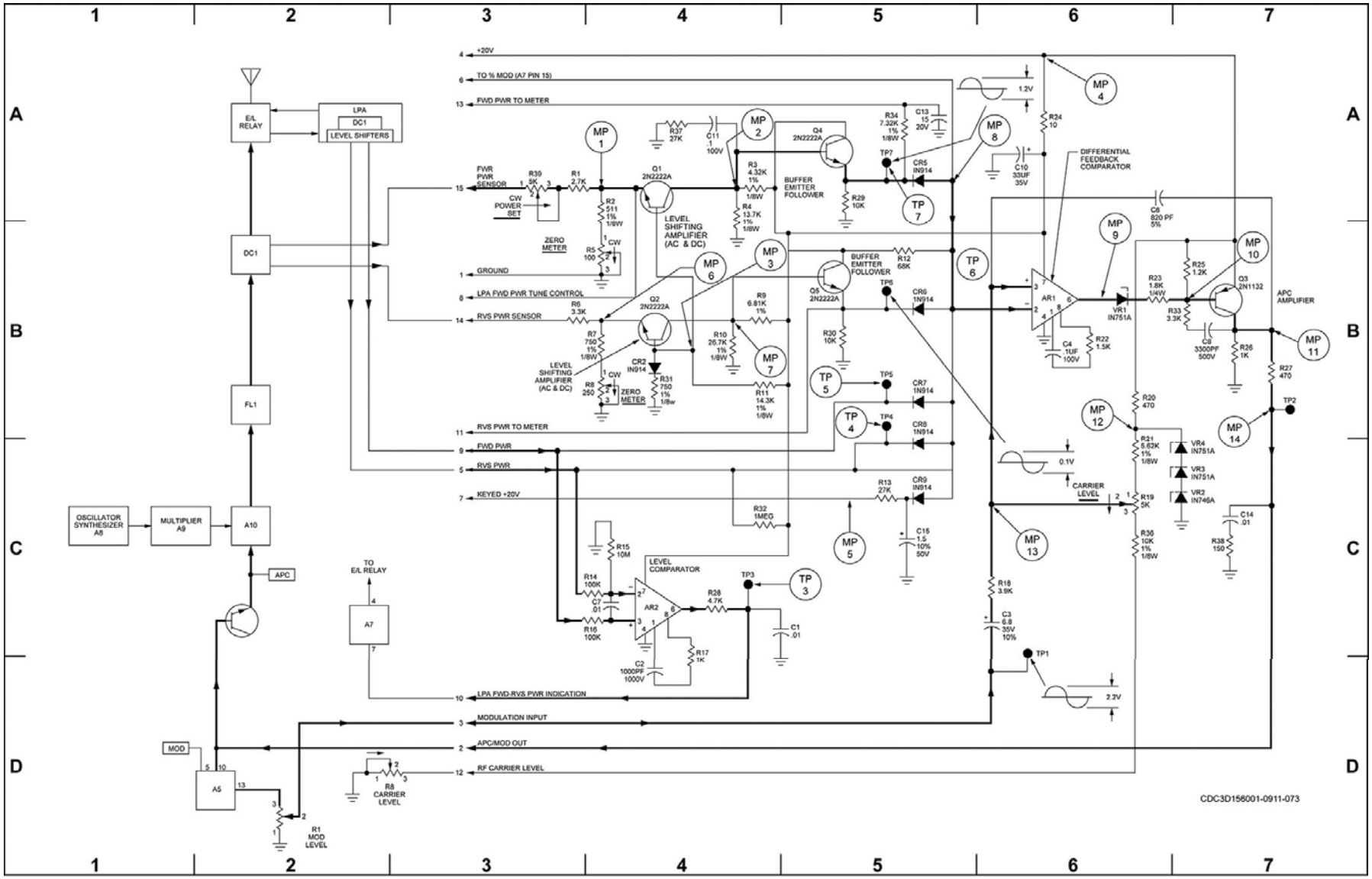

Foldout 5. Transmitter control radio frequency/modulator A6 module.

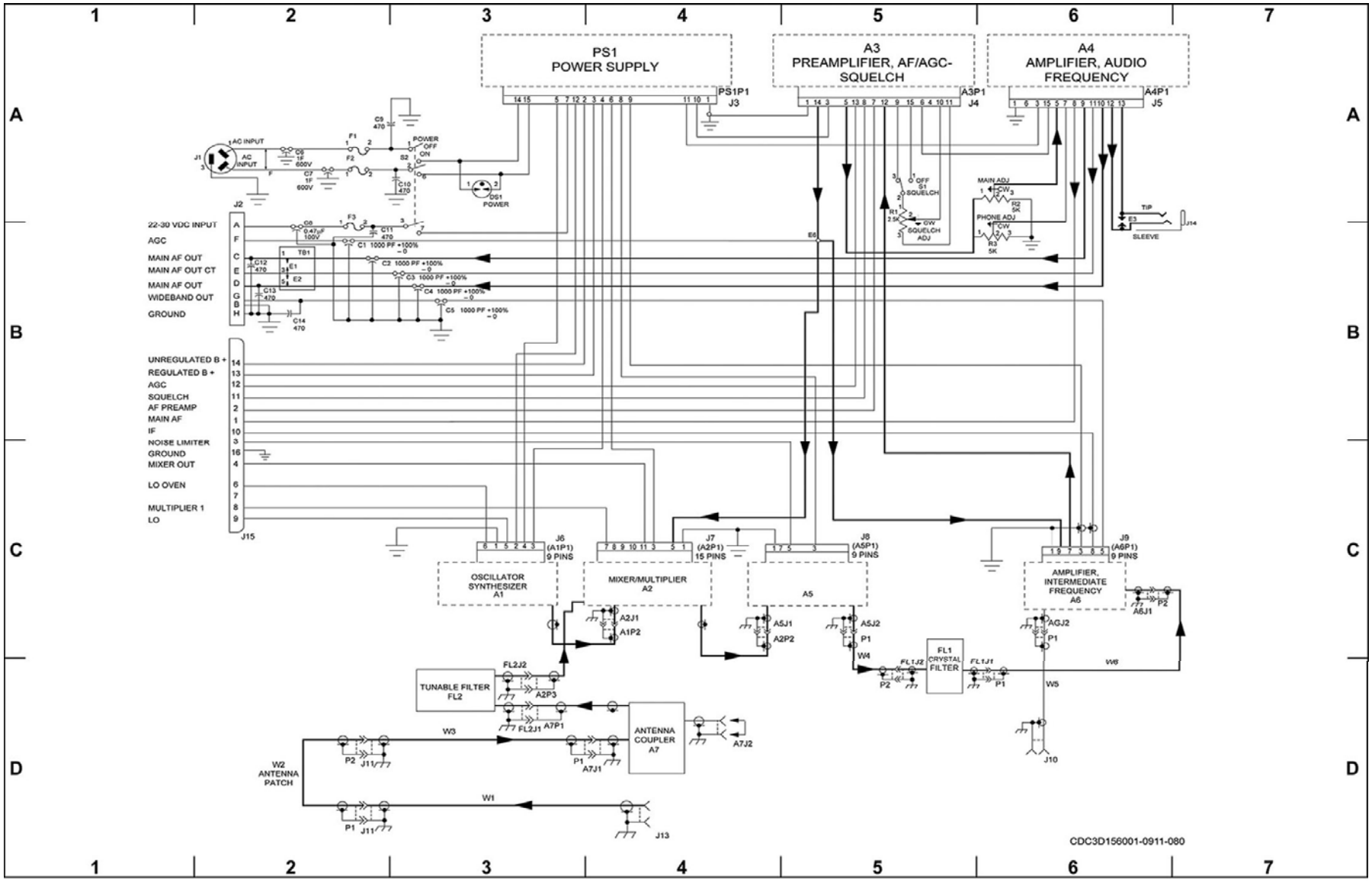

Foldout 6. Receiver wiring block diagram.

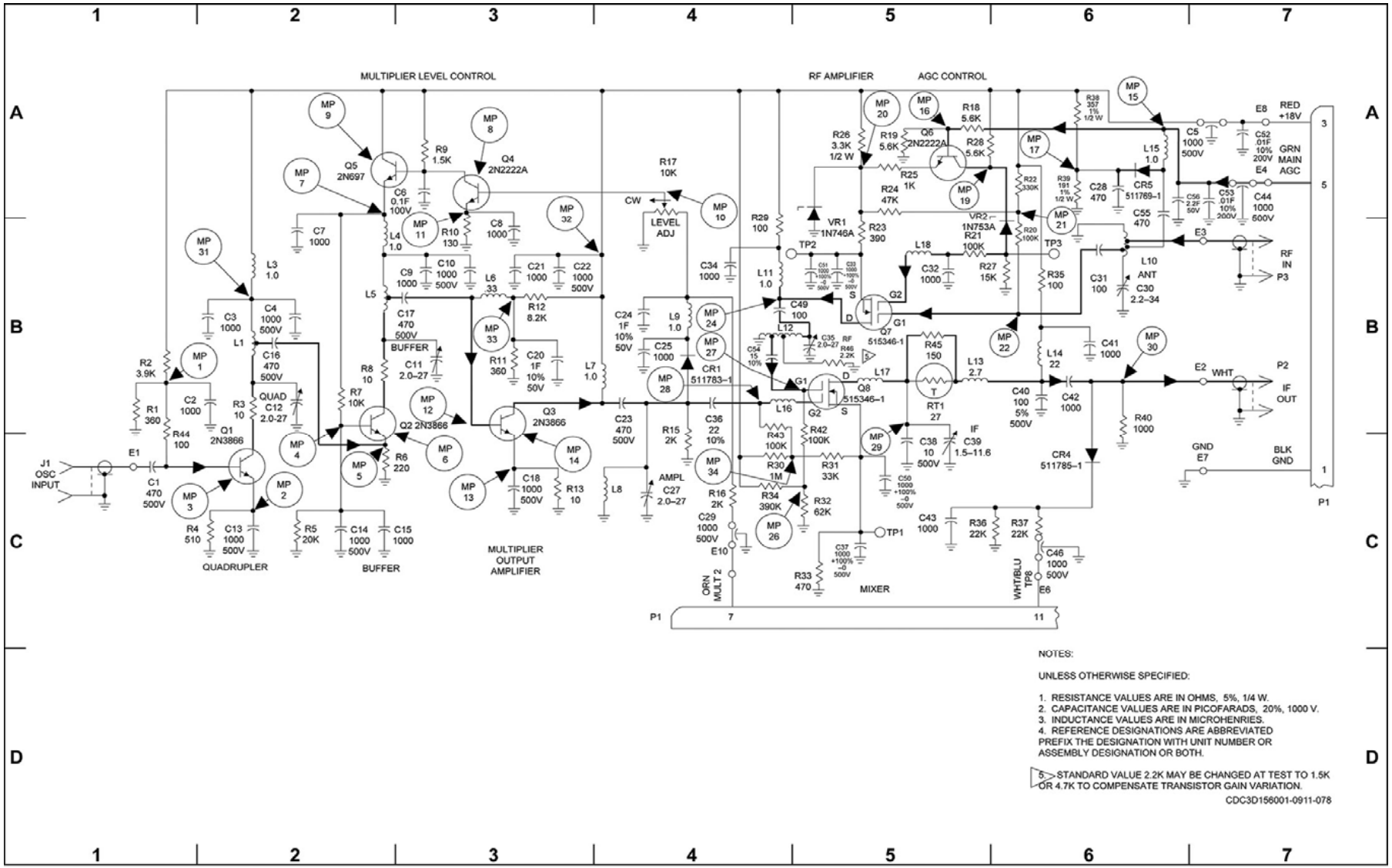

Foldout 7. UHF receiver mixer/multiplier A2 module.

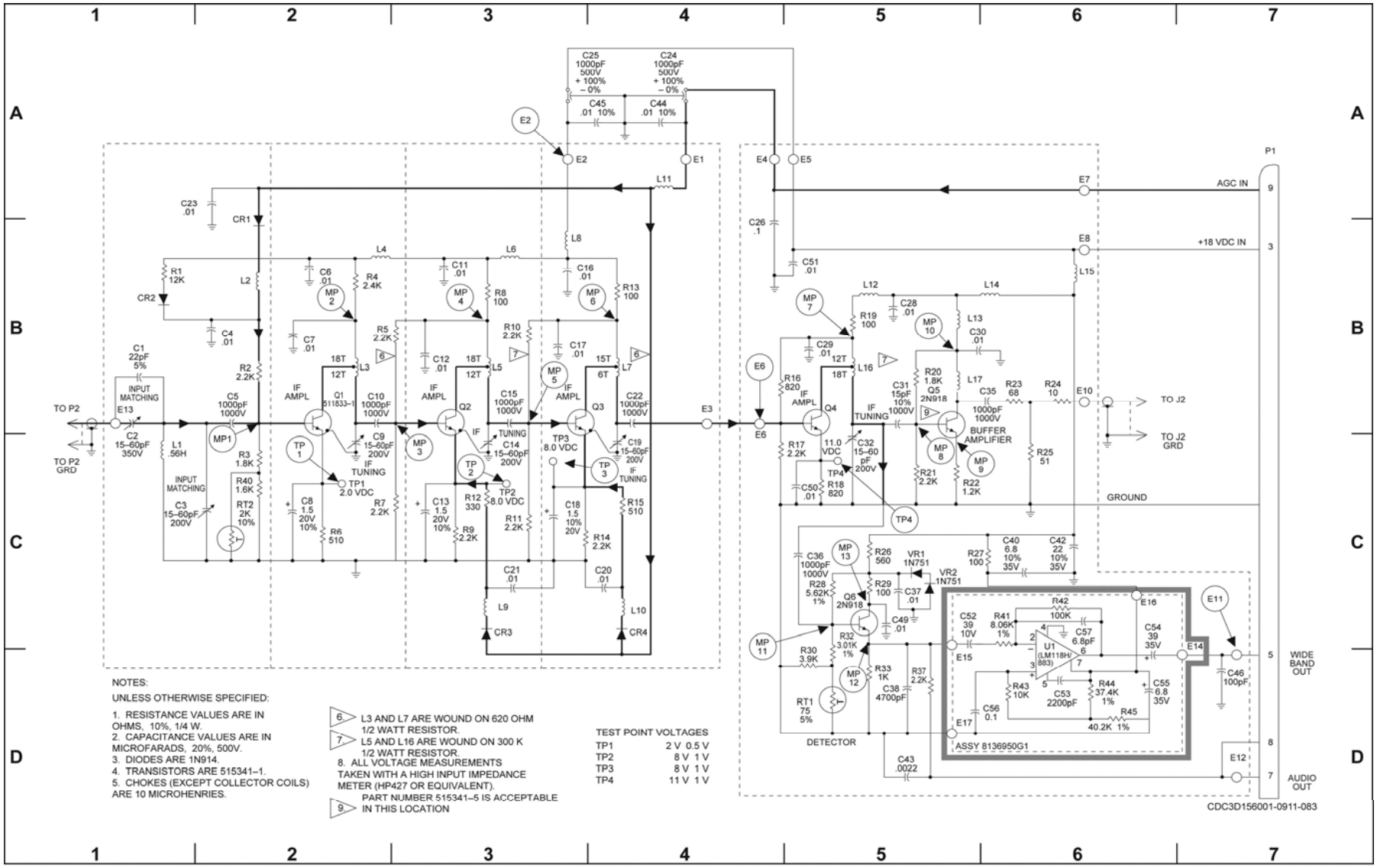

Foldout 8. Receiver intermediate frequency amplifier and detector A6 module.

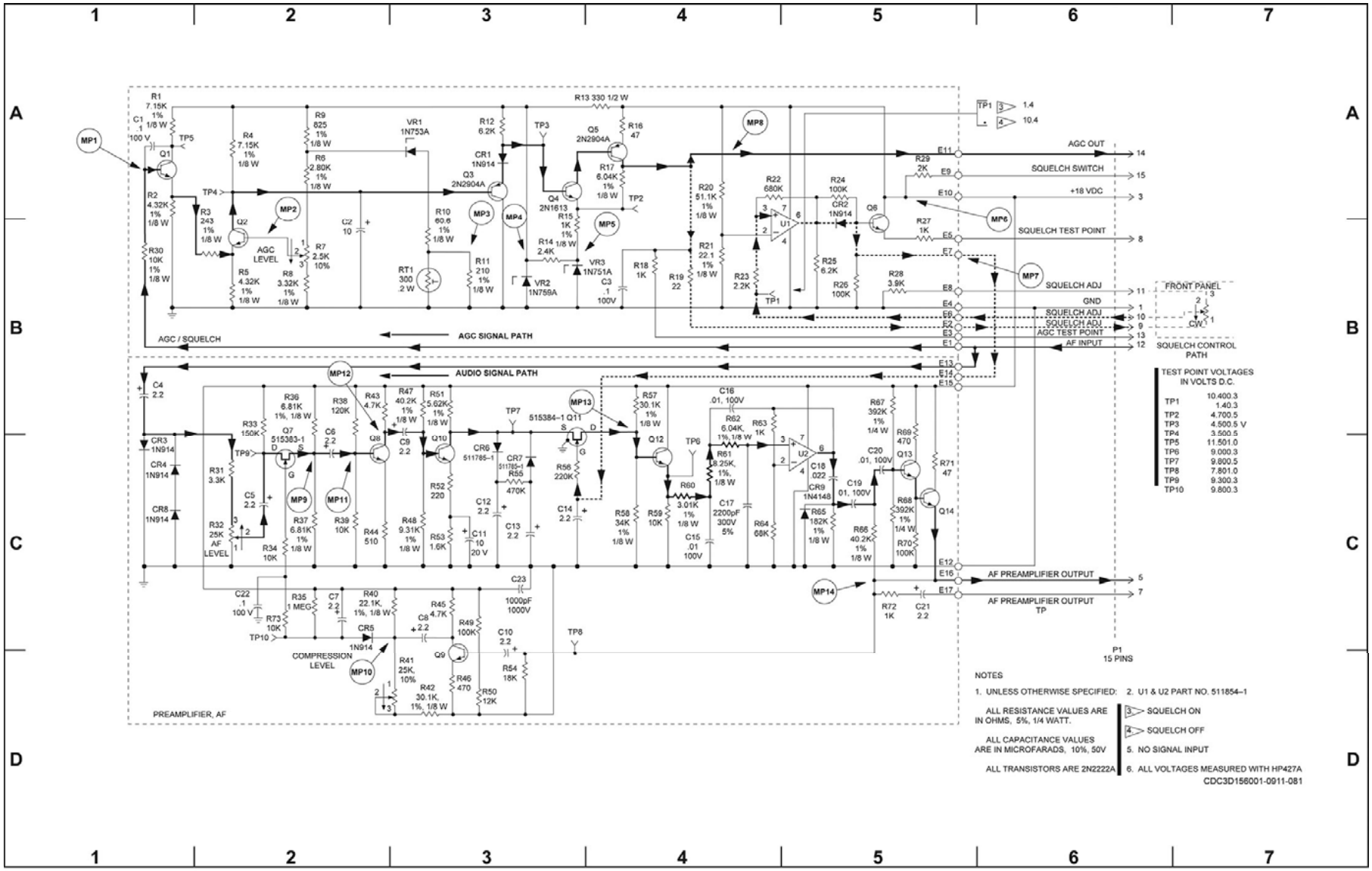

Foldout 9. Receiver preamplifier, audio frequency/AGC-squelch A3 module.

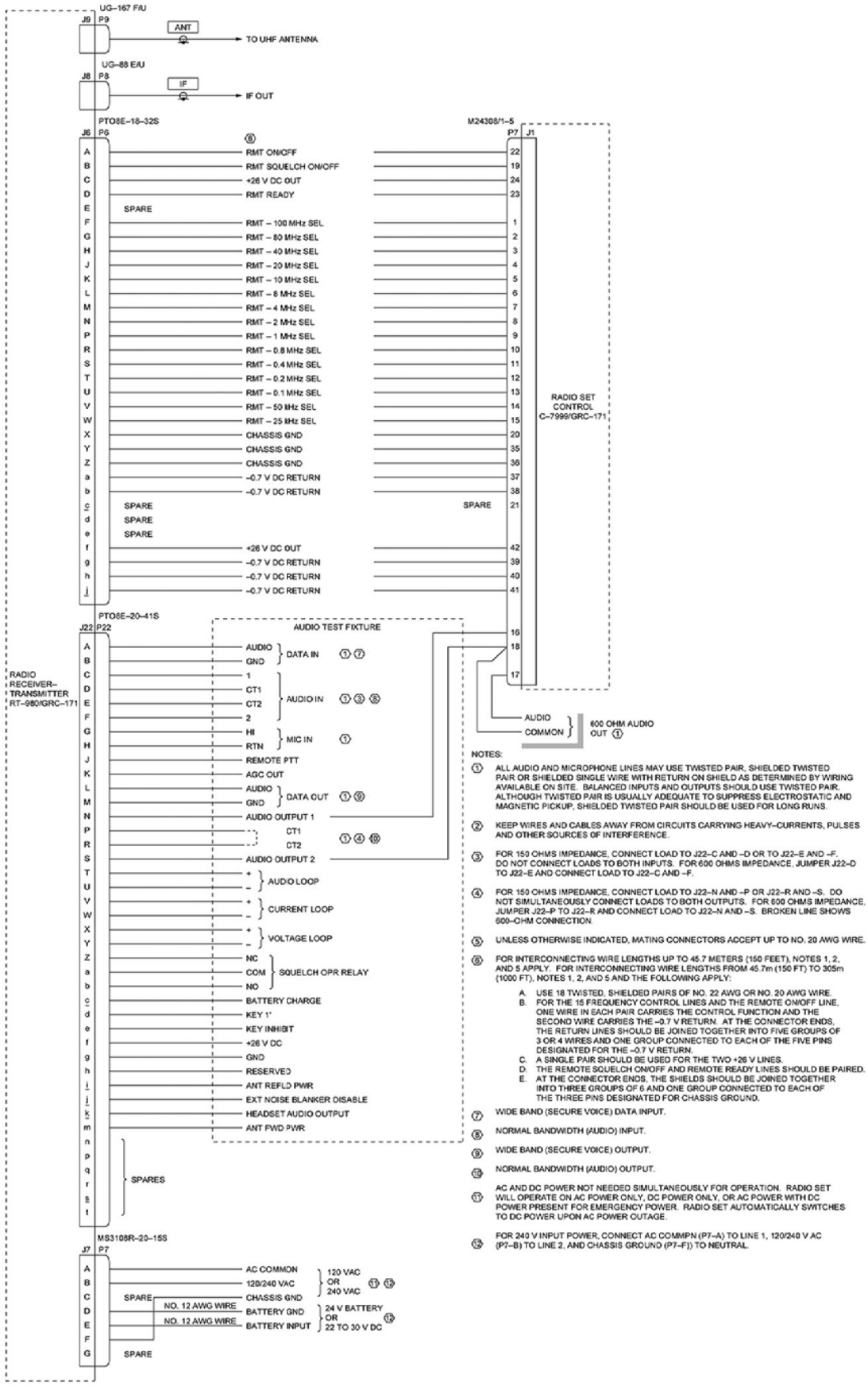

Foldout 10. AN/GRC-171 wiring diagram.

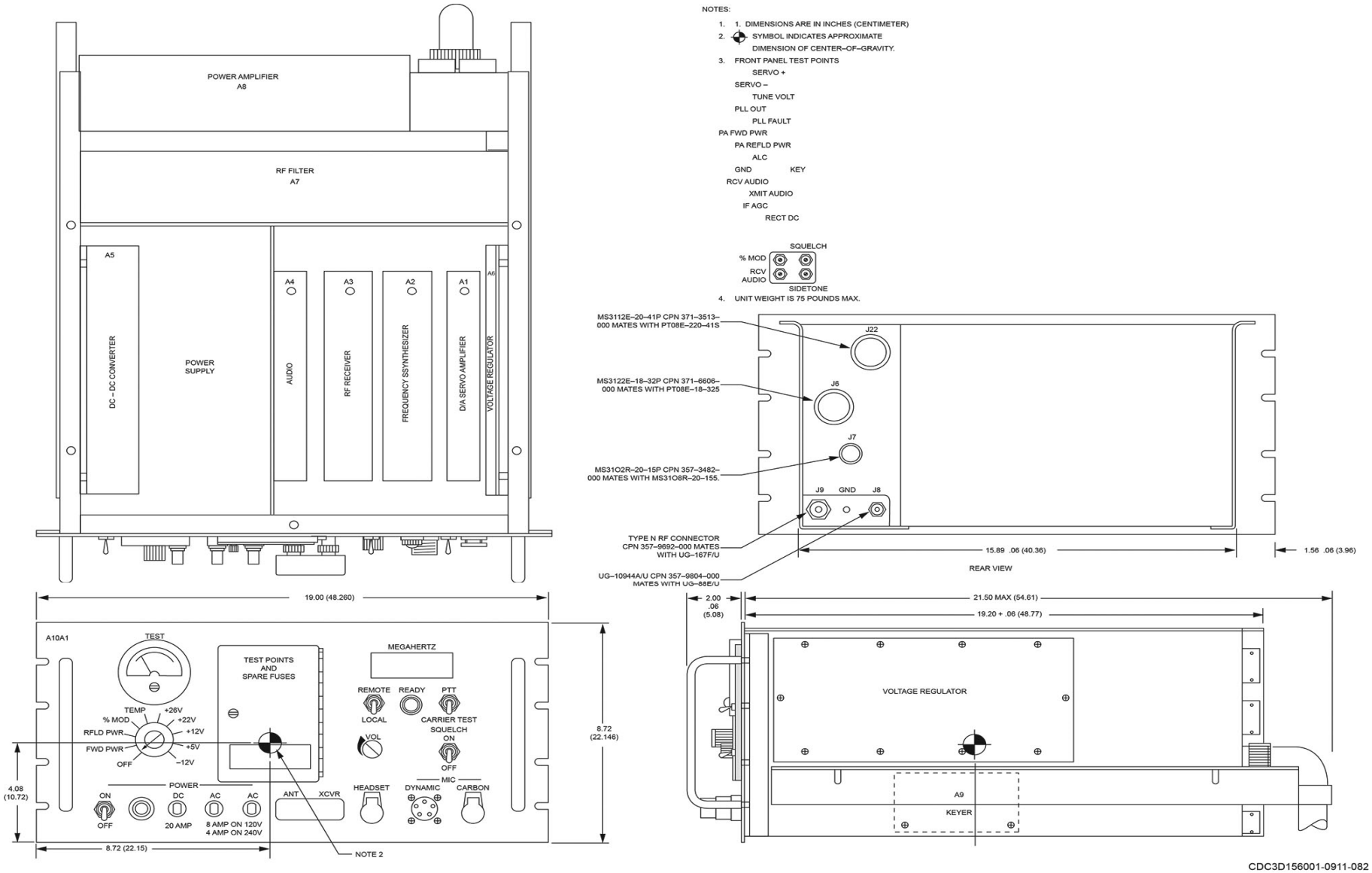

Foldout 11. AN/GRC-171 front, top, back diagrams.

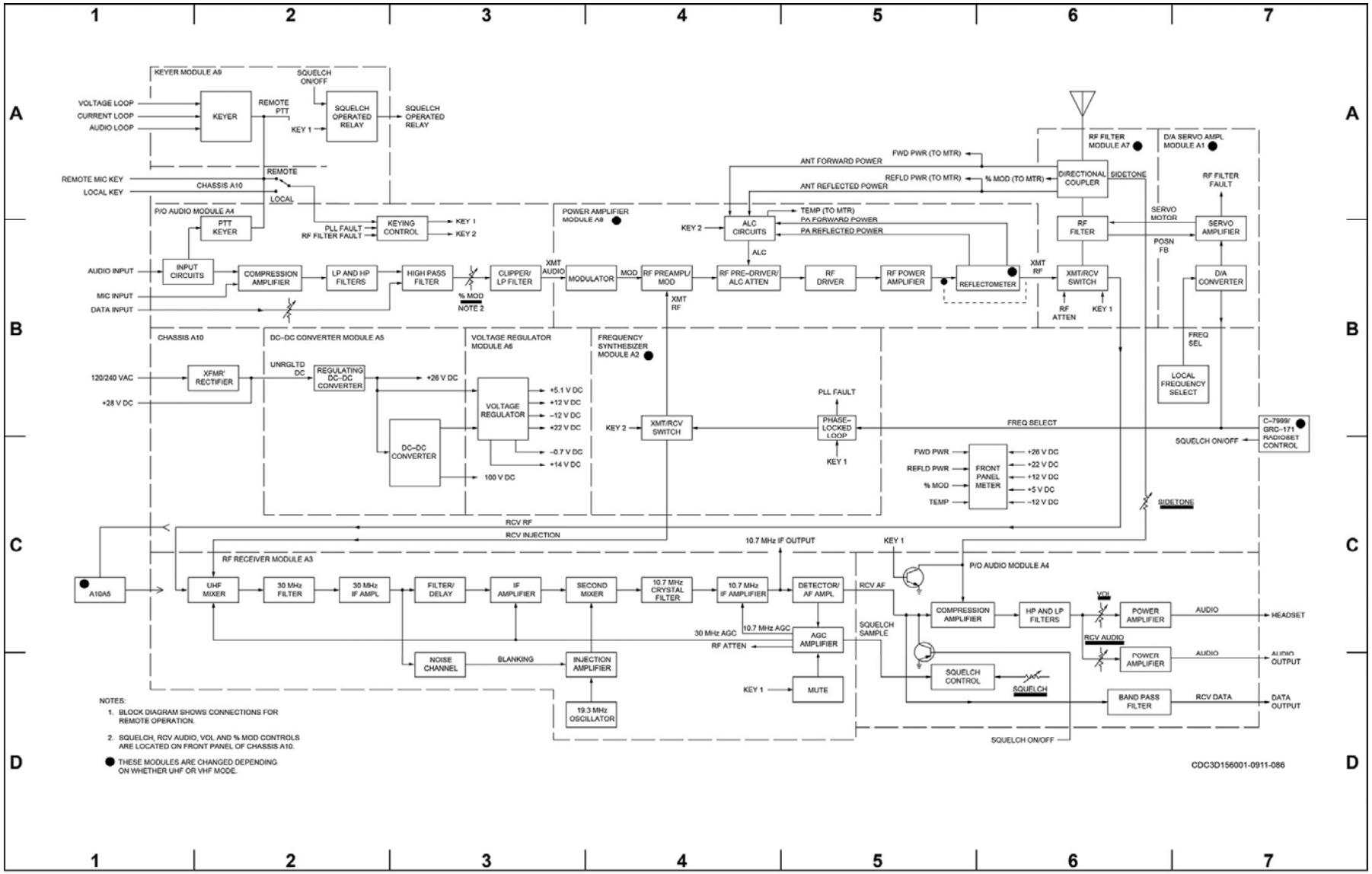

Foldout 12. AN/GRC-171/211 block diagrams

Student Notes

AFSC 1C853B
1C853B 01 S01 1909
Edit Code 01