CDC 1C853B

Radar, Airfield & Weather Systems Journeyman

Volume 1. Duties, Transmit/Receive Fundamentals, Test Equipment, and Airfield Configuration and Layout

Air Force Career Development Academy

Air University

Air Education and Training Command

1C853B 01 1909, Edit Code 01

AFSC 1C853

Author: MSgt Michael P. Webb
MSgt Troy A. Partin
334th Training Squadron
Radar, Airfield & Weather Systems School (AETC)
334 TRS/ULCA
610 Hangar Road, Building 4214
Keesler Air Force Base, Mississippi 39534-2030
DSN: 597-3118
E-mail address: 334TRS.ULCA.1C8CDCWriter@us.af.mil

Instructional Systems Specialist: Dexter L. King

Editor: Maxine Baldwin

Air Force Career Development Academy (AFCDA)
Air University (AETC)
Maxwell AFB-Gunter Annex, Alabama

Material in this volume is reviewed annually for technical accuracy, adequacy, and currency. For Weighted Airman Promotion System (WAPS) Specialty Knowledge Test (SKT) purposes, the examinee should check the *Enlisted Promotions References and Requirements Catalog* to determine the correct references to study.

THIS IS A THREE-volume B set career development course (CDC) that covers fundamental career knowledge you need to satisfy CDC requirements for the award of the 5-skill level in the 1C8X3 Air Force Specialty Code (AFSC).

Volume 1 is divided into four units that introduce you to common AFSC knowledge, transmit and receive fundamentals, test equipment, and a discussion of general airfield layout.

Unit 1 covers basic electronic principles and theory and is divided into two sections. The first section explains fundamentals of electricity, focusing on metric notation, principles of electricity, and direct and alternating current. The second section covers basic electronic components, electronic circuits, and other components and circuits applicable to the career field.

Unit 2 discusses transmit and receive fundamentals and is divided into four sections. The first section describes communications mediums. The second section covers analog principles and techniques, describing different types of modulation. The third section describes digital communication methods and signal integrity. The last section discusses light wave communications with emphasis on fiber optics and light wave propagation principles.

Unit 3 covers fixed radio equipment and is divided into four sections. The first section covers transmitter fundamentals and a few common transmitters that are used in the career field. The second section covers receiver characteristics and describes common career field receivers. The third section explains transceivers and also describes a few commonly used models in 1C8X3 work centers. The last section discusses ancillary equipment and delves into antenna propagation, common antennas, and other associated equipment.

Unit 4 describes test equipment and airfield operations support and is divided into three sections. The first section is an extensive discussion of common test equipment used today and measuring various parameters with this equipment. Section 2 describes a few analyzing systems in use in some work centers. The final section focuses on airfield operations support, explaining the career field's importance to the mission, system siting criteria, and ending with electrical power systems.

Volume 2 introduces you to common air traffic control navigation systems. Older systems are discussed as well as newer Family of Systems (FoS) equipment that will eventually replace the legacy systems.

Volume 3 covers standard maintenance practices, meteorological equipment, air traffic control communication systems, and tactical airfield equipment.

A glossary is included for your use.

Code numbers on figures are for preparing agency identification only.

The use of a name of any specific manufacturer, commercial product, commodity, or service in this publication does not imply endorsement by the Air Force.

To get a response to your questions concerning subject matter in this course, or to point out technical errors in the text, unit review exercises, or course examination, call or write the author using the contact information provided in this volume.

NOTE: Do not use Air Force Instruction (AFI) 38-402, *Airmen Powered by Innovation and Suggestion Program,* to submit corrections for printing or typographical errors. For Air National Guard (ANG) members, do not use Air National Guard Instruction (ANGI) 38-401, *Suggestion Program.*

If you have questions that your supervisor, training manager, or education/training office cannot answer regarding course enrollment, course material, or administrative issues, please contact Air University Educational Support Services at http://www.aueducationsupport.com. Be sure your request includes your name, the last four digits of your social security number, address, and course/volume number.

For Guard and Reserve personnel, this volume is valued at 32 hours and 8 points.

NOTE:

In this volume, the subject matter is divided into self-contained units. A unit menu begins each unit, identifying the lesson headings and numbers. After reading the unit menu page and unit introduction, study the section, answer the self-test questions, and compare your answers with those given at the end of the unit. Then complete the unit review exercises.

Page

Unit 1. Basic Electronic Principles and Theory 1-1
1–1. Fundamentals of Electricity 1-1
1–2. Component and Device Theory 1-17
Unit 2. Transmit and Receive Fundamentals 2-1
2–1. Communications Mediums 2-1
2−2. Modulation Principles and Techniques 2-33
2−3. Digital Communications 2-52
2–4. Light wave Communications 2-64
Unit 3. Fixed Radio Equipment 3-1
3−1. Transmitters 3-1
3−2. Receivers 3-8
3−3. Transceivers 3-19
3−4. Ancillary Equipment 3-33
Unit 4. Test Equipment and Airfield Operations Support 4-1
4–1. Test Equipment 4-1
4–2. Analyzing Systems 4-39
4–3. Airfield Operations Support 4-56

Glossary G–1

Unit 1. Basic Electronic Principles and Theory

1–1. Fundamentals of Electricity 1–1
001. Metric notation 1–1
002. Principles of electricity 1–3
003. Direct and alternating current 1–9
1–2. Component and Device Theory 1–17
004. Basic electronic components 1–17
005. Electronic circuits 1–28
006. Other components and circuits 1–40

NOW THAT YOU ARE a Radar, Airfield & Weather Systems (RAWS) technician, you will work with electrical systems and, occasionally, have to troubleshoot them. Having a thorough understanding of basic electronic principles will be essential somewhere in your line of work. This unit contains lessons designed to help you understand the fundamentals of electronics as well as introduce some of the more common electronic circuits and components you will work with.

1–1. Fundamentals of Electricity

Before you can effectively troubleshoot an electronic system, it is vital to understand some of the basic concepts and principles of electronics. This lesson will be cover metric notation, principles of electricity, and direct and alternating current. The unit will begin by looking at some numbering systems that will help make your job a little easier.

001. Metric notation

The field of electronics often involves measurements and mathematic calculations consisting of very large and very small numbers when analyzing electrical circuits. Working with these extremely large or small numbers can be a cumbersome chore; calculations often consist of unwieldy numbers, and decimal fractions can cause errors because of a misplaced decimal point or an accidental omission of a number. Therefore, it is beneficial to convert numbers into different formats so that they are easier to work with.

Powers of ten

Powers of ten numbering systems are ways to express very large or very small numbers in more convenient formats. Basically, a whole or mixed number is expressed as the product of a factor and the appropriate positive power of ten. Powers of ten indicate a number's significant digits and its order of magnitude.

Example: $123{,}000{,}000 = 1.23 \times 10^{8}$

Likewise, a decimal fraction is expressed as the product of a factor and the appropriate negative power of ten.

Example: $0.000000456 = 4.56 \times 10^{-7}$

Powers of ten numbers are made up of the following parts:

- Coefficient: The number before the multiplication symbol. (Example: 6.4 is the coefficient of 6.4×10^{2}).
- Base: The number right after the multiplication symbol that is to be multiplied by itself. When the number 10 is used as the base and matched with an exponent, it is called a power of ten.
- Exponent: This is the superscript number next to the 10 and indicates the number of times 10 is multiplied times itself. This number also represents the number of places the decimal point

shifts from the original number to where it ends up in the coefficient. If the decimal point moves to the left, the exponent will be more positive. If the decimal moves to the right, the exponent will be more negative.

Scientific notation

Scientific notation is a form of powers of ten numbering. Scientific notation uses the same basic procedures for manipulating numbers as powers of ten with one noticeable difference—the final form expressed has a coefficient of greater than or equal to 1, but less than 10. To write a number in scientific notation, put a decimal after the first digit and drop the zeroes. The exponent will be the number of places from the decimal to the end of the number.

Example: 76.45×10^4 (764,500) = 7.645×10^5 (764,500)

The mass of the earth is about 5,973,600,000,000,000,000,000,000,000 grams (g). That is a pretty big number to work with. To convert that to a power of ten, we first shift the decimal point to the left while counting each number of position changes. After moving the decimal point 27 places to the left, we end up with a coefficient of 5.9736 and a positive exponent of 27. When written in scientific notation, it is 5.9736×10^{27} g.

How about an extremely small number? The mass of a proton is 0.000000000000000000000016726 grams. To convert that to a power of ten, we first shift the decimal to the right while counting each number of position changes. After moving the decimal point 24 places to the right, we end up with a coefficient of 1.6726 and a negative exponent of –24. When written in scientific notation, it is 1.6726×10^{-24} g.

To convert a powers of ten number back to its original format, simply reverse the above steps by counting the appropriate number of decimal spaces right or left of the coefficient, and filling in zeros where needed. For example, to convert 6.8×10^6 back to its original number, we would count six decimal spaces to the right (remember, move the decimal to the right if the exponent is positive and to the left if the exponent is negative), and we end up with 6,800,000.

Engineering notation and prefixes

Engineering notation is another form of the power of ten numbering system that is more commonly used in electronics. Engineering notation is accomplished using the previous methods of moving the decimal point to any convenient position in the numerical coefficient as long as the *resulting exponent is either zero or a multiple of three*. Exponents such as 9, 6, 3, 0, –3, –6, –9, and –12 allow you to express values with the International System of Units' prefixes. Prefixes such as giga, mega, kilo, and so on simplify written and spoken expressions of electrical quantities. The table below shows several common powers of ten, their metric prefix, and metric symbol.

Decimals >/= 1	Positive Exponents	Metric Prefix	Symbol		Decimals <1	Negative Exponents	Metric Prefix	Symbol
1	10^0							
10	10^1				0.1	10^{-1}		
100	10^2				0.01	10^{-2}		
1,000	10^3	kilo	K		0.001	10^{-3}	milli	m
10,000	10^4				0.0001	10^{-4}		
100,000	10^5				0.00001	10^{-5}		
1,000,000	10^6	mega	M		0.000001	10^{-6}	micro	μ
10,000,000	10^7				0.0000001	10^{-7}		
100,000,000	10^8				0.00000001	10^{-8}		
1,000,000,000	10^9	giga	G		0.000000001	10^{-9}	nano	n

It's common practice to use prefixes to represent these quantities. Think of the metric prefix as a shorthand way to express a large or small number.

Example: 26.2×10^2 watts (W) = 2.62×10^3 W = 2.62 kilowatts

Expressing powers of ten as different numbers

What if your power of ten number does not contain the exact exponent you need to express? You must know how to convert numbers between the different powers of ten. For example, let's say you want to express the number 12.34×10^2 in kilos (10^3)—to do this, you simply subtract the original exponent from the new exponent that you want to end up with:

Example: $(^3) - (^2) = 1$

If the result is positive, you move the decimal point to the left by the number of positions equal to the result.

Example: $1.234 \times 10^3 = 1.234$ kilos

Performing calculations with powers of ten numbers

The advantage of using power of ten notation is that it makes addition, subtraction, multiplication, and division of very large or small numbers easier.

Addition and subtraction

To add or subtract numbers expressed in power of ten formats, the decimal point on either or both numbers must be adjusted until the exponents of the power of ten are identical.

Example: $(2 \times 10^6) + (5 \times 10^7) = (2 \times 10^6) + (50 \times 10^6)$

Addition or subtraction of the numerical coefficients is performed as usual, and the power of ten will be identical to the common exponent.

Example: $2 + 50 = 52$, so the answer is 52×10^6 or 5.2×10^7 as expressed in scientific notation.

Multiplication and division

Multiplication and division of numbers expressed in power of ten formats are more straightforward. First, perform the desired calculation on the numerical coefficients as usual.

Example: $(4 \times 10^6) \times (7 \times 10^7) = 4 \times 7 = 28$

Next, calculate the appropriate power of ten. For multiplication calculations, the power of ten for the result is the *sum* of the powers of ten exponents.

Example: $10^6 + 10^7 = 10^{13}$, so the answer is 28×10^{13} or 2.8×10^{14} in scientific notation.

For division calculations, the power of ten for the result is the difference of the divisor and dividend (numerator and denominator) exponents.

002. Principles of electricity

Electricity is a general term used for the variety of phenomena resulting from the presence and flow of an electrical charge. To better understand this, we will be discussing the following concepts of electricity: atomic structures, electrical charges and flow, electrical potential (voltage), electric current, resistance, electrical energy, and electrical power. These topics will be touched upon lightly but delivered so that you can use each concept to build knowledge of more complex functions as the unit goes on.

Atomic structure

The electron theory assumes that all electrical and electronic effects are due to the movement of electrons from one place to another. To see how these electrons move, we first must learn about the structure of the atoms making up electrical circuits. An atom is the smallest particle of a chemical element that retains its chemical properties and is made up of several subatomic particles—electrons,

protons, and neutrons (fig. 1–1). Protons and neutrons make up a dense, massive atomic nucleus in the center of the atom and are collectively called nucleons. Electrons orbit the nucleus in energy levels, or shells.

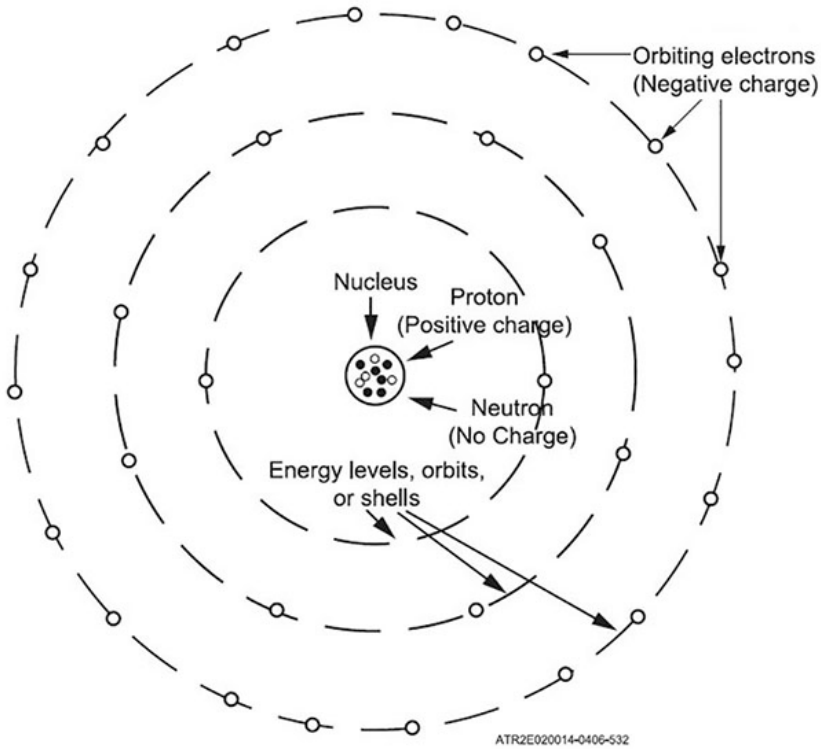

Figure 1–1. Atom structure.

Electric charge

Electric charge is a property of certain subatomic particles that interact with electromagnetic fields and causes attraction and repulsion forces between them. Protons have a positive electrical charge while electrons have a negative electrical charge. Neutrons remain neutral. The atom in figure 1–1 shows that electrons travel around (orbit) the nucleus. When more than one electron is the same distance from the nucleus, those electrons have the same amount of energy as each other and, therefore, are considered to be in the same shell and have the same energy level as each other. When several electrons travel in their own orbit and are the same distance from the nucleus, they have the same amount of energy. The electrons with the same amount of energy are in the same shell or the same energy level (orbit).

The difference between atoms is that they contain different numbers of the same particles. An atom is electrically neutral when it contains the same number of positive charges in the nucleus as it has negative charges in its orbits. If they are not neutral, they are called ions. Ions are either positive or negative.

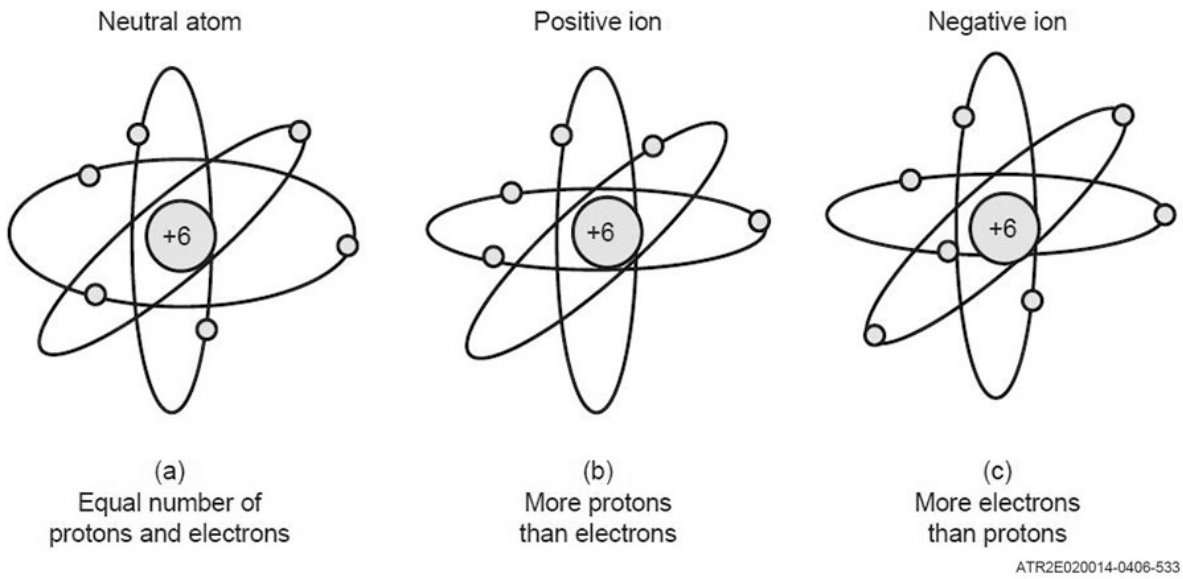

Figure 1–2. Atom and ions.

The atom shown in figure 1–2(a) shows six protons in the nucleus and six electrons in the outer shell. Since opposite charges (+ and –) cancel each other, the entire atom itself is considered electrically neutral or balanced. The atom shown in figure 1–2(b) shows six protons in the nucleus, but only five electrons in orbit. The five negative charges do not cancel the six positive charges, so the atom is not neutral. Rather, it has one more proton than electrons, which causes the atom to have a positive charge and is therefore called a positive ion. The atom shown in figure 1–2(c) shows six protons, but there are seven electrons. Having more electrons than protons causes the atom to have a negative charge and, therefore, is called a negative ion.

So how do atoms give up or receive electrons? In order for an electron to fall to a lower shell, there must be room in the next lower shell, and the electron must give up a definite amount of energy. In certain instances, that energy is given up in the form of light. Similarly, electrons can move from one shell to a higher shell if there is room in the next higher shell, and the electron can absorb enough energy.

The energy needed to cause an electron to move to a higher shell can come from several external sources. These sources can be heat energy, light energy, magnetic energy, pressure energy, chemical (dry-cell battery) energy, and friction (static) energy.

Ions

In order for an atom to become an ion, it must lose or gain electrons in its outer shell. This gain or loss is called ionization. Figure 1–3 shows an atom with electrons in four shells. The inner shell has the most attraction to the nucleus and has the least amount of energy. The outer shell has the least attraction to the nucleus and the most amount of energy. The electrons in the outermost shell are *valence electrons*. If a valence electron absorbs sufficient energy, it attempts to move to a higher shell. In the process of moving, it can escape the attraction of the nucleus and becomes a free electron. The type of the atom determines the amount of energy needed to free an electron from an atom. If the outermost orbit contains fewer than eight electrons, they are *free electrons*. If the atom has eight electrons in its outermost shell, it is stable. An atom with less than eight valence electrons is unstable. Free electrons randomly drift around in the material. Some solid materials such as copper, gold, and silver literally have billions of free electrons randomly drifting about throughout the material.

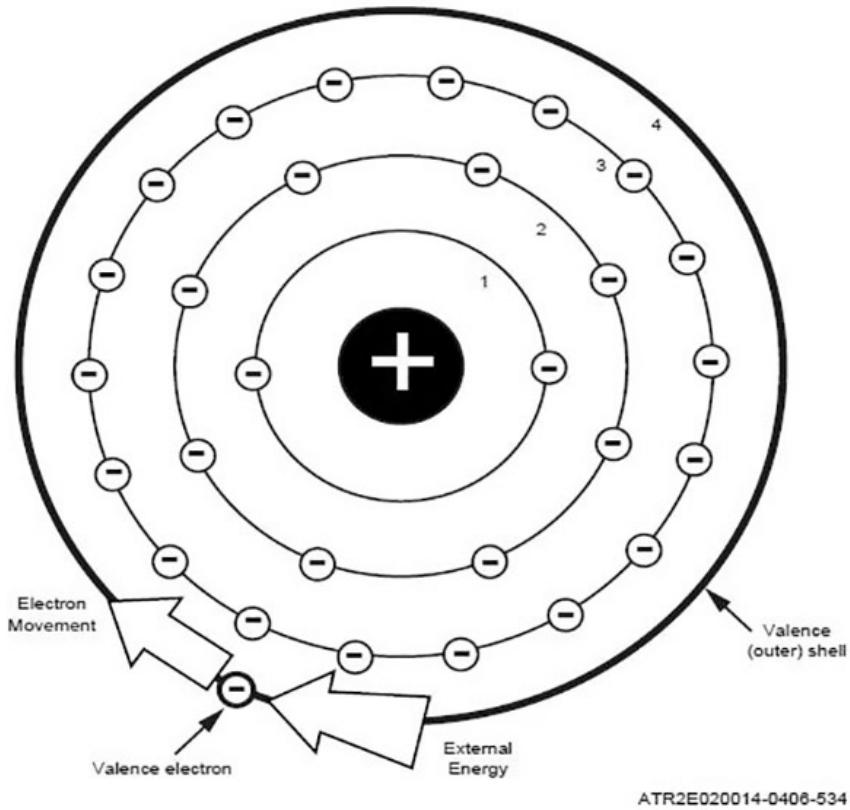

Figure 1–3. Atom.

The movement of electrons transfers energy from point to point. When a valence electron absorbs energy and becomes a free electron, the charge balance of an atom is upset. If one valence electron leaves the shell of a neutral atom, then the atom will be left with more protons (+) than electrons (–). Thus, the overall charge of the atom is now positive, making it a positive ion.

Once a valence electron (–) escapes the shell of an atom and becomes free, it no longer has a counterbalancing effect of a corresponding proton (+) in the nucleus. The free electron may lose energy and fall into a shell around a neutral atom. When this occurs, the atom that the electron falls into will have one additional orbiting electron (–) than corresponding protons (+) in the nucleus. The overall charge on the atom will be negative, making it a negative ion.

Positive ions, negative ions, and free electrons are all important concepts in the study of electronics. When an electron moves from one neutral atom to another, the original atom becomes a positive ion, and the receiving atom becomes a negative ion. The free electrons are capable of moving from one atom to another. This movement of free electrons is known as electron flow.

Electron flow

Electricity is based on this flow of energy. How a circuit is designed and what a circuit does is dependent on controlling electron flow. A good example is the difference of current flow in conductors, semiconductors, and insulators. In the study of electronics, the association of matter and electricity is important. Since every electronic device is constructed of parts made from ordinary matter, the effects of electricity on matter must be well understood. As a means of accomplishing this, all elements of which matter is made may be placed into one of three categories depending on their ability to conduct electricity—conductors, semiconductors, and insulators.

Conductors are elements such as silver, copper, gold, and aluminum, which conduct electricity very readily. Materials that contain 1, 2, or 3 valence electrons are good conductors. Insulators are those materials, such as wood and glass, which oppose the conduction of electricity. Insulators are

materials, or combinations of materials, with a higher number of valence electrons (5, 6, 7, and 8). All materials that contain four free electrons are referred to as semiconductors. Semiconductive materials such as germanium and silicon are widely used in today's electronic circuits because of their ability to have their electrical properties controlled by external forces such as temperature and voltage.

Voltage

Electrical potential, or voltage, is the force or electrical energy required to move electrons from one place to another.

The difference in electrical potentials between two points in an electric field (the space surrounding an electric charge) is known as the electrical potential difference. This difference is proportional to the electrostatic force that tends to push electrons or other charge carriers from one point to the other. Potential difference, electrical potential, and electromagnetic force are measured in volts (V), leading to the commonly used term *voltage*.

To have an electrical energy source, such as a battery, one terminal must be more positive or more negative than the other. This condition may be referred to as a difference of potential, an electromotive force, a potential, or a voltage. All of the terms are correct; however, voltage is the most commonly used.

Battery terminals (or any other points) having unequal electrical charges have the capacity to move electrical charges through a resistance because of this difference of potential energy. An automobile battery has an electromotive force, potential difference, or voltage of 12 V.

Voltage can be represented many different ways. The scientific formula symbol for voltage is "E" and a typical unit of measurement will be represented as "volts," or as the abbreviation "V." For instance, a voltage measurement can be displayed as "5 volts" or "5 V."

There are two different types of voltage; alternating current (AC) and direct current (DC). These will be discussed more in-depth in the next section.

Current

Electric current flow is the movement of free electrons through a conductor. The rate of movement is measured in amperes. One ampere represents the movement of a specific number of electrons (6.28×10^{18} electrons = 1 coulomb = unit of electric charge) past a certain point in a conductor in one second.

When controlled by an external force, the electrons move generally in the same direction. The effect of this movement is felt almost instantly from one end of the conductor to the other. The electron movement is called electric current.

Electric current, defined historically as *conventional current,* is the term used for current flow from the most positive part of a circuit to the most negative part. However, to simplify circuit analysis, most electronics illustrations depict "electron current" flow from the most negative part of a circuit to the most positive part since only the negatively charged electrons that actually flow. It should be noted that depending on the conditions, an electric current can consist of a flow of charged particles in either direction or even in both directions at once. A DC voltage is a unidirectional flow, while an AC voltage reverses direction repeatedly.

Current is displayed in formulas as the letter "I." The unit of measurement can be displayed as "amperes", or "amps" for short, with an abbreviation of "A." For instance, a typical current measurement can be stated as "5 amps" or "5 A."

Resistance

Resistance is the opposition a device or material offers to the movement of electrons and is measured in ohms (Ω).

When there is current in a material, the free electrons move through the material and occasionally collide with atoms. These collisions cause the electrons to lose some of their energy and restrict their

movement. The more collisions mean the more opposition to the flow of electrons. The higher the resistor value, the greater the opposition to current flow.

Resistance is displayed in formulas as the letter "R." The unit of measurement is represented as "ohms" and the symbol is the Greek letter Omega "Ω". A typical resistance reading can be stated as "5 ohms" or "5 Ω."

Impedance

Electrical impedance, or simply impedance, is a measure of the combined opposing forces to an alternating electric current.

Unlike electrical resistance, the impedance of an electric circuit can be a complex number because it is determined by the vector sum of a circuit's resistance, capacitive reactance, and inductive reactance. Impedance is displayed in formulas as the letter "*Z*" and has the same unit of measurement as resistance, displayed as "*ohms*" or "*Ω*."

Power

Electric power is the rate at which electrical energy is produced or consumed and is measured in W.

Energy is typically defined as the ability to do work or, more specifically, the work resulting from a force acting on mass over a distance. Electrical energy is the energy that's stored in an electric field or transported by an electric current. Some examples of electrical energy include:

- The energy that is constantly stored in the earth's atmosphere and is partly released during a thunderstorm in the form of lightning.
- The energy that is stored in the coils of an electrical generator in a power station and is then transmitted by wires to the consumer; the consumer then pays for each unit of energy received.
- The energy that is stored in a capacitor and can be released to drive a current through an electrical circuit.

The operation of electrical circuits involves force (voltage) acting on mass (electrons) over a distance. As mentioned, energy is the capacity to do work, so in electrical circuits, energy is transformed into heat energy. When electrons flow through a conductor, the free electrons lose energy as they collide with atoms in the material. When there is current through a resistor, energy is converted to heat. Power, therefore, can be viewed as the measure of how much energy is being converted to heat.

A common example of this is the light bulb. The current through the filament that produces light also produces heat because the filament has some opposition to current. All electrical devices dissipate or consume power. When an electrical component such as a light bulb or a stereo is connected to and draws current from a voltage source, the component is considered a load on that voltage source. Every load device has a certain amount of resistance. This is load resistance. Load resistance is the resistance or opposition of the load device to current. Load current is the current drawn from the voltage source by the load device.

The scientific formula symbol for power is "*P*" and a typical unit of measurement will be represented as "*watts,*" or as the abbreviation "*W*." For instance, a voltage measurement can be displayed as "5 watts" or "5 W."

Inductance

Inductance is an effect which results from the magnetic field that forms around a current-carrying conductor. Electrical current through the conductor creates a magnetic flux proportional to the current. A change in this current creates a change in magnetic flux that, in turn, generates an electromotive force (EMF) that acts to oppose this change in current. Inductance is a measure of the generated EMF for a unit change in current. The symbol in formulas is represented as the letter "*L*" (inductor/inductance). The unit of measurement is displayed as a "*henry*" or as the abbreviation "*H*."

Capacitance

Capacitance is a measure of stored energy between two conductive electrodes, or plates, separated by an insulator (otherwise known as a capacitor). A capacitor can store electric energy when disconnected from its charging circuit, so it can be used like a temporary battery. The scientific formula symbol for capacitance is "*C*" and a typical unit of measurement will be represented as "*farads,*" or as the abbreviation "*F*."

All of these principles and how they relate to each other with regards to electrical circuitry will be explained in further detail. The next topic will use these basic electrical principles to describe DC and AC.

003. Direct and alternating current

The material covered in this section explains the most basic concepts of DC then builds on that information to explain AC. This section discusses the theory behind both terms and explains a few applications that each are used for.

Direct current

To explain DC in its simplest form, the circuit of a flashlight can be used as an example. It contains a source of electrical energy (the dry cells or batteries in the flashlight), a load (the bulb) which changes the electrical energy into a more useful form of energy (light), and a switch to control the energy delivered to the load.

Before you study a schematic representation of the flashlight, it is necessary to define certain terms. The load is any device through which an electrical current flows and which changes this electrical energy into a more useful form. Some common examples of loads are a lightbulb, which changes electrical energy to light energy; an electric motor, which changes electrical energy into mechanical energy; and the speaker in a radio, which changes electrical energy into sound. The source is the device that furnishes the electrical energy used by the load. It may consist of a simple dry cell battery (as in a flashlight), a storage battery (as in an automobile), or a power supply (such as a battery charger). The switch, which permits control of the electrical device, interrupts or connects the current delivered to the load.

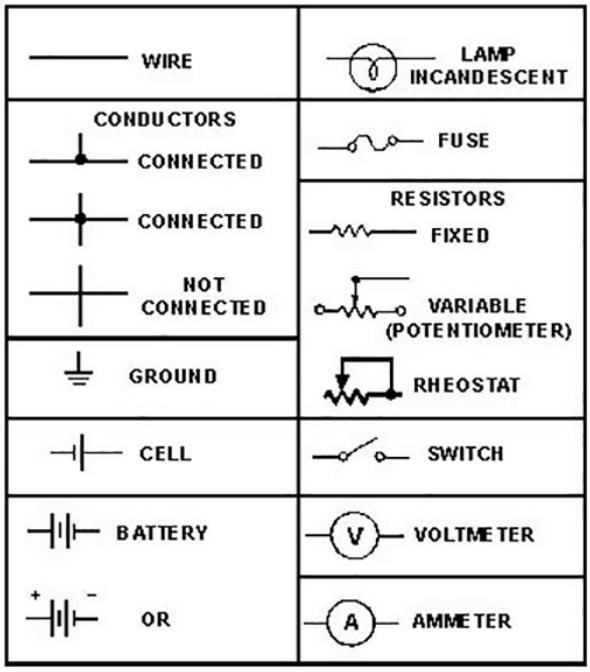

Figure 1–4. Symbols commonly used in electricity.

Schematic representation

The technician's main aid in troubleshooting a circuit in a piece of equipment is the schematic diagram. The schematic diagram is a "picture" of the circuit that uses symbols to represent the various circuit components. This allows for physically large or complex circuits to be shown on a relatively small diagram. Before studying the basic schematic, look at figure 1–4. This figure shows a few of the basic symbols that are used in this section, but is not all-inclusive. There are hundreds of different symbols that represent electrical components. These, and others like them, are referred to and used throughout the study of electricity and electronics.

Direct current flow

The schematic in figure 1–5 represents a flashlight. View A of the figure shows the flashlight in the off or de-energized state. The switch (S1) is open. There is no complete path for current (I) through the circuit, and the bulb (DS1) does not light. In figure 1–5 view B, switch S1 is closed. Current flows in the direction of the arrows from the negative terminal of the battery (BAT), through the switch (S1), through the lamp (DS1), and back to the positive terminal of the battery. With the switch closed, the path for current is complete. Current will continue to flow until the switch (S1) is moved to the open position or the battery is completely discharged.

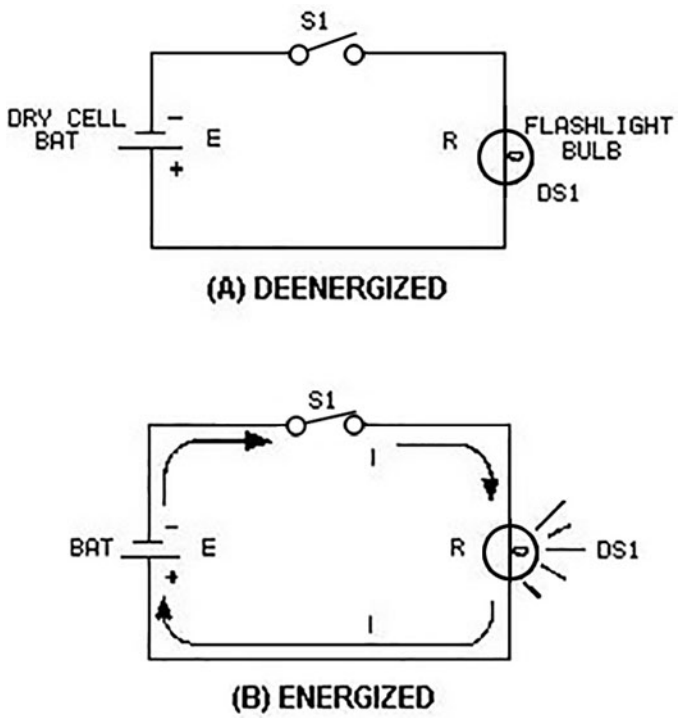

Figure 1–5. Basic flashlight schematic.

This direct flow of current from the negative battery post to the positive post is a representation of how DC flows in a basic circuit. More complex circuitry will be discussed later in this volume.

Direct current applications

Although most every home, business, and facility is wired for AC but there are still many applications that require DC to operate. For most purposes, we can assume that DC provides a constant voltage over time. In reality, a DC battery will slowly lose its charge, meaning that the voltage will drop as the battery is used. This requires re-charging the battery in order to have full power at the next use. Even with re-charging, batteries can lose their voltage over time.

The bulk of DC use is in batteries. Some of the most common uses of DC are listed below:

- Your car electrical circuits run off a 12 V DC battery. Even hybrid and electric vehicles use DC.
- Cell phones utilize DC circuits and batteries.
- Most electronics used today use DC circuits that are converted from AC (televisions, computers, etc.).
- Power backup systems (lighting, uninterruptible power supplies, etc.).
- Cordless tools.

As you see, DC has a huge impact on your everyday life. While it is very important to us, AC is just as significant.

Alternating current

With the AC method, voltage forces electrons to flow first in one direction, then in the opposite direction, alternating very quickly. This is why it is called alternating current voltage. While a generator is used to produce the AC voltage, this section will explain how magnetism and electromagnetism work hand-in-hand with electricity.

Electromagnetism

Magnetism and basic electricity are so closely related that one cannot be studied at length without involving the other. There are three general relationships that exist between them:

- Current flow will always produce some form of magnetism.
- Magnetism is by far the most commonly used means for producing or using electricity.
- The peculiar behavior of electricity under certain conditions is caused by magnetic influences.

Let's talk about the main source of magnetism—a magnet. Every magnet has three common properties:

- They attract and hold iron.
- They all have two poles—one north and one south.
- They will assume close to a north-south alignment, if permitted to move.

Every magnet is surrounded by a magnetic field that consists of flux lines or lines of force that extend into space from one end of the magnet to the other as well as inside the magnet (fig. 1–6). The north and south poles attract one another because the poles are opposites. It also holds true that two like poles repel one another.

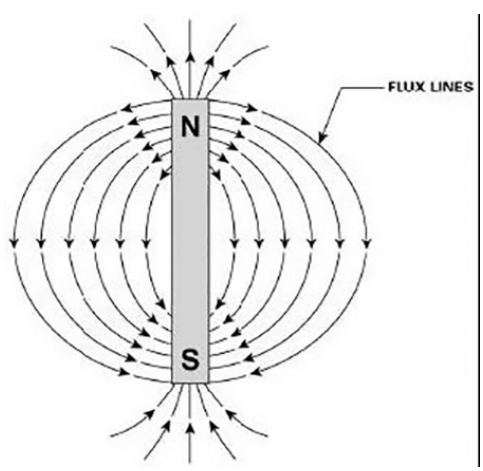

Figure 1–6. Flux lines.

In 1819, Hans Christian Oersted, a Danish physicist, discovered there was a relationship between electricity and magnetism. He found a conductor carrying current was surrounded by a magnetic field and each point on the axis of the wire was surrounded by a circular magnetic field (fig. 1–7). By measuring the strength of the magnetic field at various distances from the conductor, Oersted found the field was stronger closer to the conductor and diminished at a distance. He also discovered the strength of a magnetic field could be changed by varying the current through a conductor. This principle is commonly referred to as electromagnetism.

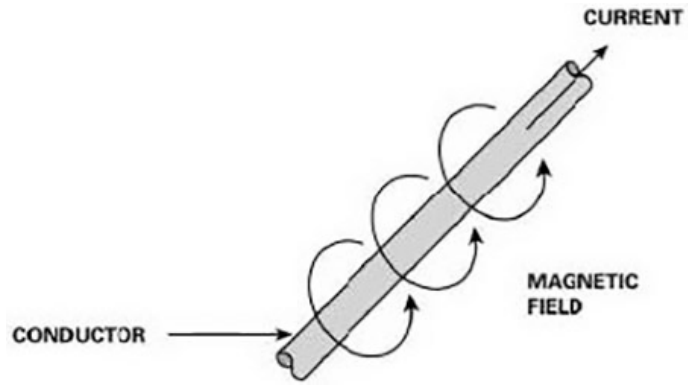

Figure 1–7. Magnetic field.

Notice the direction of the lines of force. This direction can be determined by using the left-hand rule. With your left hand, grasp a conductor (fig. 1–8). If you place your thumb in the direction of current flow, your fingers will indicate the direction of the lines of force. It is very important for you to know the strength of this magnetic field is dependent on the amount of current in the conductor.

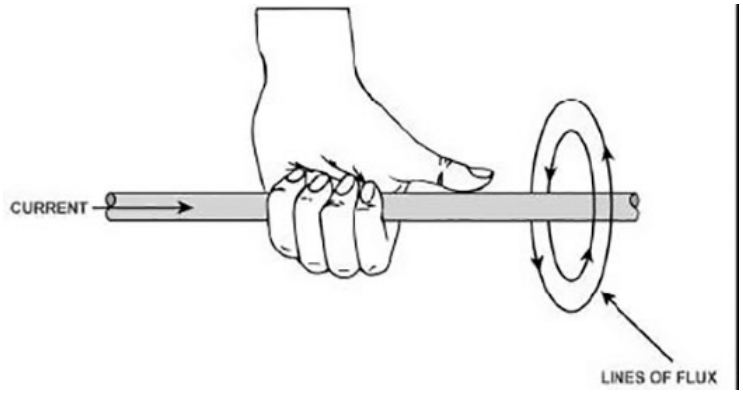

Figure 1–8. Left-hand rule example.

Figure 1–9 illustrates the effect that coiling the conductor has on the magnetic field. Notice that the field is similar to that of a permanent magnet. The strength of the field is affected by several factors, listed here for your convenience:

- Increasing the number of turns concentrates the number of lines of force in a given area, thus greatly concentrating the strength.
- If the core size (diameter) is increased, magnetic field strength will decrease. This is true because there would be less concentration of lines of force in a given area within the core.
- The distance between coils (spacing) provides greater strength when the individual turns are moved closer together.
- The type of core.
- The amount of current in the coil.

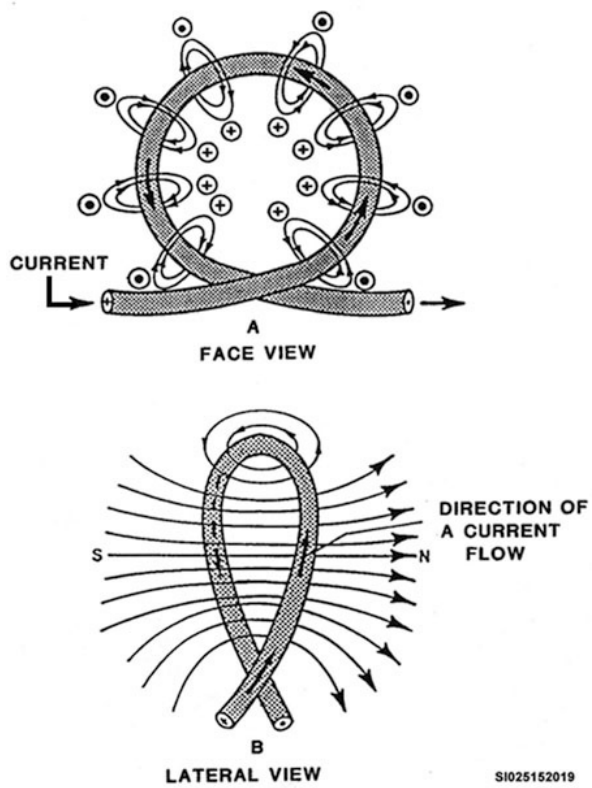

Figure 1–9. Electromagnet formation.

The two most important factors discussed in the previous paragraphs are the type of core and the amount of current in the coil. When the magnetic field passes through a core medium, such as air, the lines tend to repel each other and spread out over a larger area. We can concentrate these lines by using a core material that has very low reluctance, such as soft iron. When a soft iron core is placed within the coil, the lines of force find it easier to pass through the iron than through the air. Almost all lines of force will pass through the core material until it reaches the point of saturation. When a core is saturated, it is passing all the lines of force it possibly can. Any additional lines will travel around the core rather than through it.

The strength of the field is directly related to the current in the conductor. Any current increase or decrease causes a corresponding change in the number of lines of force. Since the number of lines of force per unit area defines field strength, varying the number of lines varies the strength.

These basic electromagnetic principles led to the invention of a wide variety of electrical devices such as the previously mentioned motors, generators, solenoids, tripping devices and circuit breakers.

Creating the AC sine wave

As stated before, a generator or alternator is used to produce AC voltage by converting mechanical energy into electrical energy. The theory of magnetism is what allows the generator to produce AC voltage. This is because a current carrying conductor produces a magnetic field around itself. A changing magnetic field produces voltage in a conductor. Likewise, if a conductor lies in a magnetic field, and either the field or conductor moves, a voltage is induced in the conductor. This effect is called electromagnetic induction.

The following steps below use a simple AC generator with a single loop of wire and a magnetic field for simplicity. The figures show the loop of wire rotating in a clockwise direction through the magnetic field of the magnets. This will show how a sine wave graphically represents AC voltage and current.

The coil will cover a 360-degree rotation and show what happens at different points in the rotation. The rotating coil is divided into black and white halves to keep track of the coil's position.

Step 1: Starting point at 0 degrees.

Figure 1–10 shows the coil at 0 degrees and no rotation, no voltage is generated and no portion of the sine wave appears on the horizontal and vertical axes.

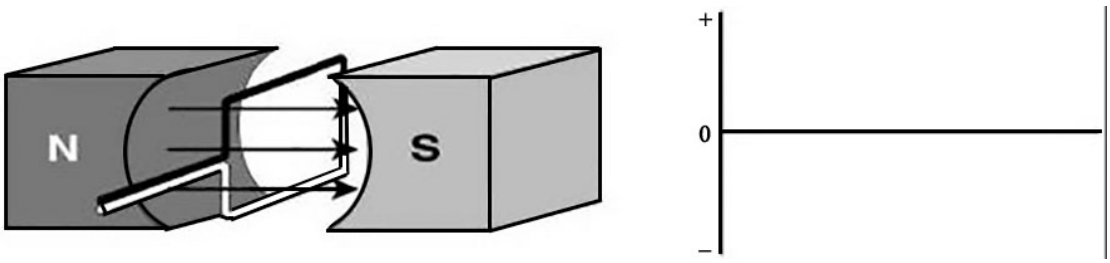

Figure 1–10. 0-degree coil rotation.

Step 2: Generation from starting point 0 degrees to 90 degrees.

Figure 1–11 shows that as the coil rotates from 0 to 90 degrees, it cuts more and more lines of flux. As the lines of flux are cut, voltage is generated in the positive direction.

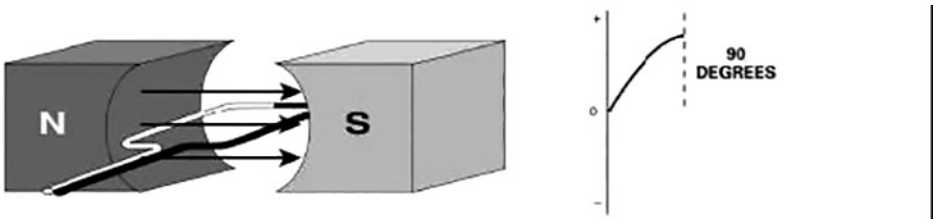

Figure 1–11. 90-degree coil rotation.

Step 3: Generation from 90 to 180 degrees.

Figure 1–12 shows that as the coil continues to rotate, it cuts fewer and fewer lines of flux. Therefore, the voltage generated goes from maximum back to zero.

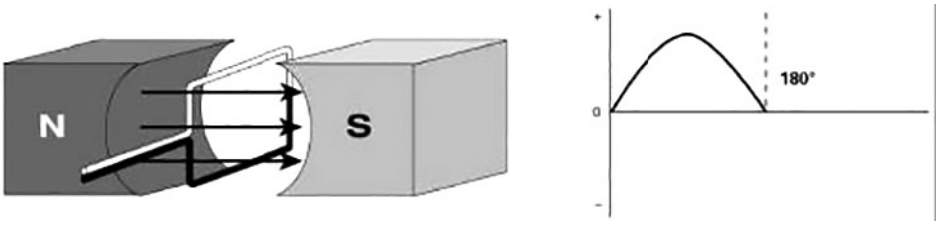

Figure 1–12. 180-degree coil rotation.

Step 4: Generation from 180 to 270 degrees.

This is similar to Step 2 except voltage is now generated in the negative direction (fig. 1–13).

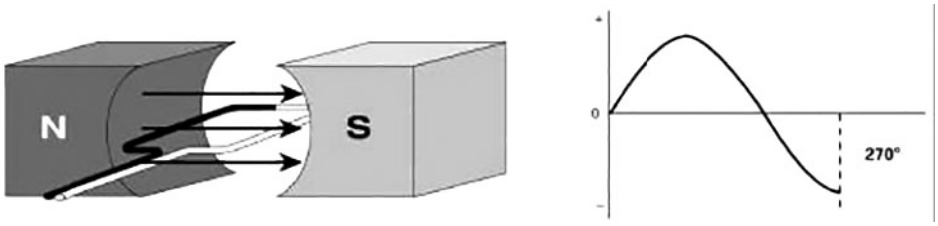

Figure 1–13. 270-degree coil rotation.

Step 5: Generation from 270 to 360 degrees

Step 5 is similar to Step 3 except the voltage is still negative (fig. 1–14). Once it reaches 0 degrees, one complete 360-degree revolution has been completed. At this point, the coil is back to its original starting position and one cycle has been completed. If the coil continues to rotate, the cycle will continue to repeat.

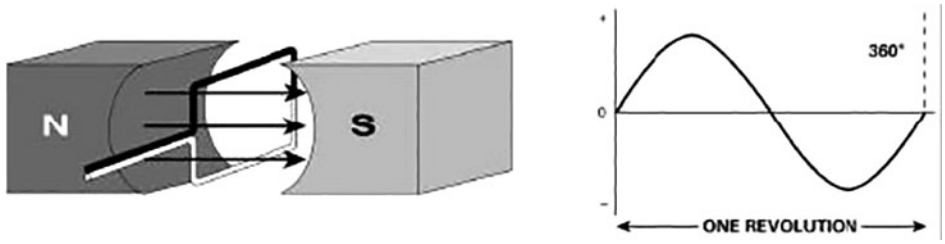

Figure 1–14. 360-degree coil rotation.

AC goes through many of these cycles each second. The number of cycles per second is called the frequency. In the United States, AC is generated at 60 hertz (Hz). This means that 60 cycles are completed every second. Frequency will be discussed in more detail later.

AC can be single-phase or three-phase. Single-phase is used for small electrical demands such as in the home and is the signal as described above. Three-phase is used where large blocks of power are required in commercial and industrial facilities. Three-phase is a continuous series of three overlapping AC cycles. Each wave represents a phase, and is offset by 120 degrees, as displayed in figure 1–15 below.

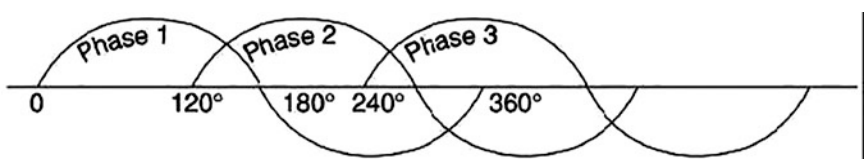

Figure 1–15. Three-phase sine wave.

Alternating current applications

As stated before, AC is used in homes, commercial sites, and industrial facilities. Almost every location in the world, in which you need electricity, will use some form or voltage of AC. It will be the most common electrical energy you will use, but when maintaining and repairing electronic equipment, you will notice how most circuits and systems also use DC.

Self-Test Questions

After you complete these questions, you may check your answers at the end of the unit.

001. Metric notation

1. What three components make up the “power of ten” format?

2. Express the number 7,750,000,000,000,000 in scientific notation.

3. What is the metric prefix for the decimal number 1,000,000?

4. Perform this power of ten calculation and answer in scientific notation: $(7 \times 10^5) + (1.2 \times 10^6)$.

5. If the calculation in question 4 was measuring W, how would you display the answer using a metric prefix?

002. Principles of electricity

1. The electron theory assumes that all electrical and electronic effects are due to what phenomenon?

2. Which subatomic particles are contained in the nucleus of an atom?

3. When is an atom considered electrically neutral?

4. Which atomic shell has the *most* energy?

5. All matter, depending on their ability to conduct electricity, may be placed into what three categories?

6. Define the term *voltage*.

7. Define the term *current*.

8. What is the opposition a device or material offers to the movement of electrons?

9. What is a measure of the combined opposing forces to an alternating electric current?

10. What is the unit of measurement for power?

003. Direct and alternating current

1. Explain the term *load*.

2. What visual aid gives the technician a "picture" of circuit components?

3. The direct flow of current from the negative battery post to the positive post is a representation of what kind of circuit?

4. What type of circuit has voltage that forces electrons to flow first in one direction, then in the opposite direction, alternating very quickly?

5. What is the most commonly used means for producing or using electricity?

6. What are the two most important factors in magnetic field strength around a conductor?

7. Describe electromagnetic induction.

8. At what frequency is AC generated in the United States?

1–2. Component and Device Theory

This section is designed as a quick refresher course to reinforce your understanding of electrical circuits and components. The information is designed to improve your troubleshooting skills and to help you understand how certain components affect different types of circuits. If you would like more in-depth information, refer to Technical Order (TO) 31–1–141–2, *Basic Electronic Technology and Testing Practices—Magnetic and Electrical Fundamentals (PHILCO–FORD)*.

004. Basic electronic components

Knowledge of how each basic electronic component functions is critical to knowing how the bigger picture of a circuit operates. This section will describe resistors, capacitors, inductors, transformers, relays and solenoids, diodes, transistors, and other special purpose components.

Resistors

As discussed before, resistance is the opposition of current flow through a substance. The unit of measurement for resistance is the ohm, symbolized by the Greek letter Omega "Ω". The letter "R" is used to show resistance in electronic formulas. Several factors, such as material type, area, and temperature, are used to determine the amount of resistance placed on a material.

Types of resistors

A resistor is used to control current flow in a circuit. Some of the more common types of resistors are wire-wound, carbon-film, and metal-film resistors. Wire-wound resistors are made by winding high-resistance wire onto an insulated tube. The ends of the wire are joined to the terminals and a protective coating is put on the resistor to help dissipate heat. Another type of resistor is the carbon resistor. It consists of a rod of pressed graphite with wire leads on each end. There are two basic categories of resistors—fixed and variable (figs. 1–16 and 1–17).

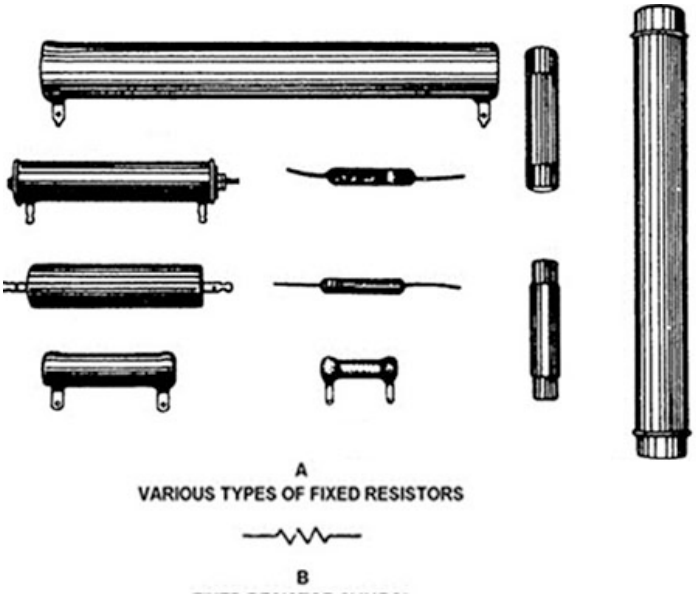

Figure 1–16. Fixed resistors.

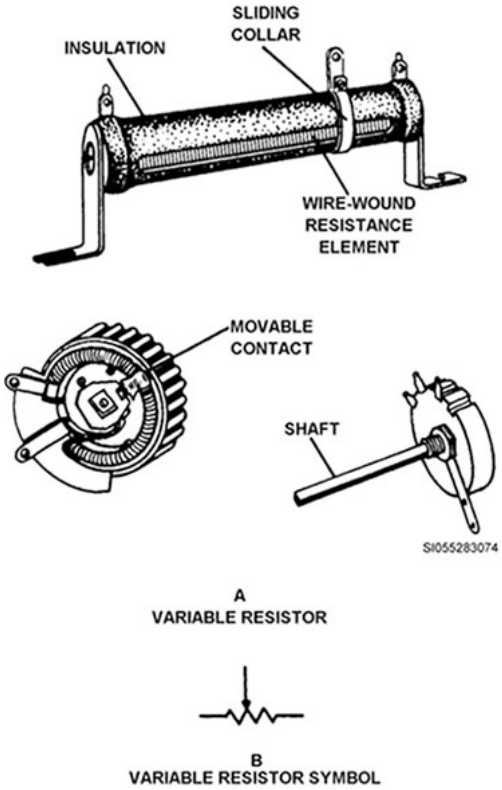

Figure 1–17. Variable resistors.

Fixed resistors are constructed so that the resistance value will not change drastically under normal operating conditions. Adjustable resistors, sometimes called rheostats or potentiometers, are placed in circuits where there is a need to vary or change the resistance in the circuit. Normally, these resistors are found in metering circuits that control the voltage and current to meters on the control panel.

Resistor color codes

The resistance value of a resistor is often stamped or stenciled on the body of large resistors. For small resistors, a resistor color code is used to identify the resistance value. The color bands are identified with the first band being nearest the end of the component. The first band gives the first digit of the value; the second band gives the second digit. The number of zeros to be added to the value is given by the third band. The fourth band indicates the tolerance (deviation) from this value.

The tolerance is usually given as plus or minus (±) 5 percent, 10 percent, or 20 percent of the rated value.

NOTE: The absence of a fourth band indicates a tolerance of 20 percent. It is not important that you memorize the color code; however, it is important that you know where to find it and how to use it. The resistor color code chart can be found in Appendix 1 of TO 31–1–141–15, *Basic Electronics Technology and Testing Practices – Parts Replacement and Substitution*.

Capacitors

Capacitance is a measure of the ability of two conductors, separated by an insulator, to store an electrical charge. The component that utilizes this principle is called a capacitor.

Construction and operation

Where an inductor opposed a change in current and stores energy in a magnetic field, a capacitor will oppose a change in voltage and store energy in an electrostatic field. The simplest type of capacitor consists of two metal plates (conductors) separated by air (an insulator or dielectric). Figure 1–18 illustrates the construction of capacitors.

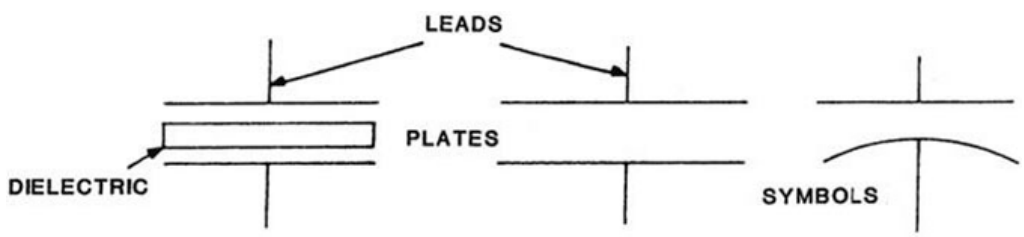

Figure 1–18. Capacitor construction.

The conductors are called plates, and the material between the plates is called the dielectric (note the similarity between the schematic symbol and the pictorial diagram). The size (capacitance) of a capacitor is determined by three factors: the area of the plates, the distance between the plates, and the type of dielectric used. It has been established that a free electron will move when inserted into an electrostatic field. The same is true, to a certain degree, even when an electron is in a bound (captive) state.

Time element of capacitors

As stated before, capacitance is the characteristic of a circuit, or component, which enables it to store an electrical charge. Charges are developed when electrons are moved from one place to another, resulting in an excess of negative charge at one point and a deficiency of negative charge at the other. Electrons cannot be moved instantaneously, and all capacitors have some resistance; therefore, it takes time to charge. The time required for a capacitor to charge depends on the amount of resistance through which the charging current flows and the size of the capacitor.

Inductors

Properties of induction have already been discussed in the AC section. The inductor is a reactive device used primarily to filter the ripples from an input signal. An inductor is simply a coil of wire. To make the inductor better, the coil of wire is wrapped around an iron core.

The main difference between resistive and reactive devices is that a resistive device will change electrical energy into heat energy, which dissipates into the air and is essentially lost. A reactive device actually stores energy and returns it to the circuit. An inductor stores the energy in the form of a magnetic field.

Transformers

The efficient use of electrical energy, like the efficient use of mechanical energy, often requires some means of converting the source energy to a form that can be used at the load. It is often necessary to adjust electrical circuits so that the power available may be applied to the load as one of various combinations of voltage and current—that is, high voltage with low current or low voltage with high current. Various types of transformers that depend on voltage.

Characteristics of transformers

A transformer converts electrical power available from one voltage-current level to another voltage-current level. However, a transformer cannot change the overall amount of power available.

The electrical characteristic that allows transformer action to take place is mutual induction, which is the action in which a change of current in one coil (or circuit) induces a voltage into another coil (or circuit). Since a transformer is nothing more than two coils separated physically but connected (or coupled) inductively, it is important that you understand mutual induction.

Figure 1–19 illustrates mutual induction. When the switch in figure 1–19 is closed, the flux lines will expand as the magnetic field builds up around coil A (the primary circuit). These flux lines will “cut” across coil B (the secondary circuit) and induce an EMF. When current through coil A reaches maximum, the magnetic field becomes steady. At this time, no more flux lines will “cut” the secondary, and no voltage will be induced into coil B.

Remember, all three conditions must be present for induction—a conductor, a magnetic field, and relative motion. This does not mean that the magnetic field has disappeared. The field still exists, but there is no relative motion. In order to induce energy into the secondary again, there must be a change in the magnetic field. To change the magnetic field, the primary current must be changed. You would have to continuously open and close the switch in the circuit, in figure 1–19, to change the primary circuit. This is why the primary circuit (or winding) on the transformer is normally connected to an AC input signal. Some circuits use pulsating DC instead of AC to change the primary circuit.

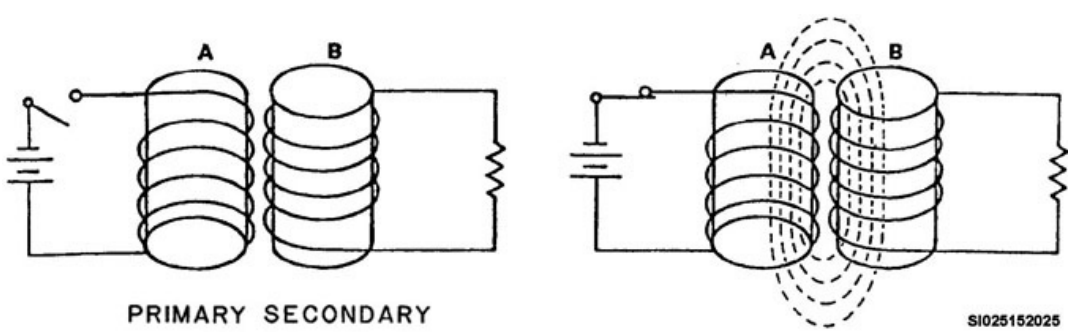

Figure 1–19. Mutual induction.

Types of transformers

Figure 1–20(A) illustrates a transformer that has more turns in the secondary (S) winding than it does in the primary (P); this is known as a step-up transformer. The voltage induced into the secondary will be greater than the primary voltage because the magnetic field produced by each turn of the primary coil will "cut" three turns of the secondary coil, a 1:3 turns ratio. Therefore, the voltage developed across the secondary winding will be greater than the voltage across the primary winding.

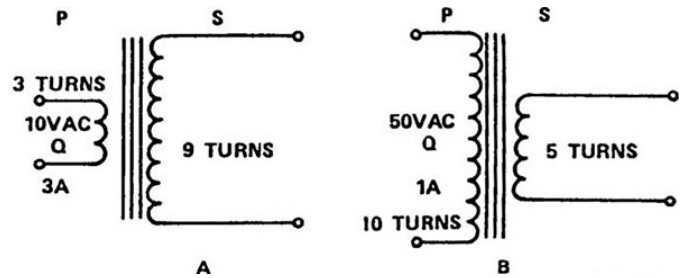

Figure 1–20. Step-up and step-down transformers.

The transformer illustrated in figure 1–20(B) has fewer turns in its secondary than in its primary. A transformer constructed in this fashion is known as a step-down transformer. The total voltage developed across the secondary will be less than the voltage applied across the primary. Figure 1–20(A) is known as a step-up transformer since there is an increase in voltage from the primary to the secondary.

Relays and solenoids

Relays and solenoids are used in various ways throughout electronic equipment. This section will briefly describe both components.

Relays

Relays are basically electrically operated switches. Figure 1–21 illustrates the simple construction of a typical relay. The relay will either open or close a circuit by using contacts.

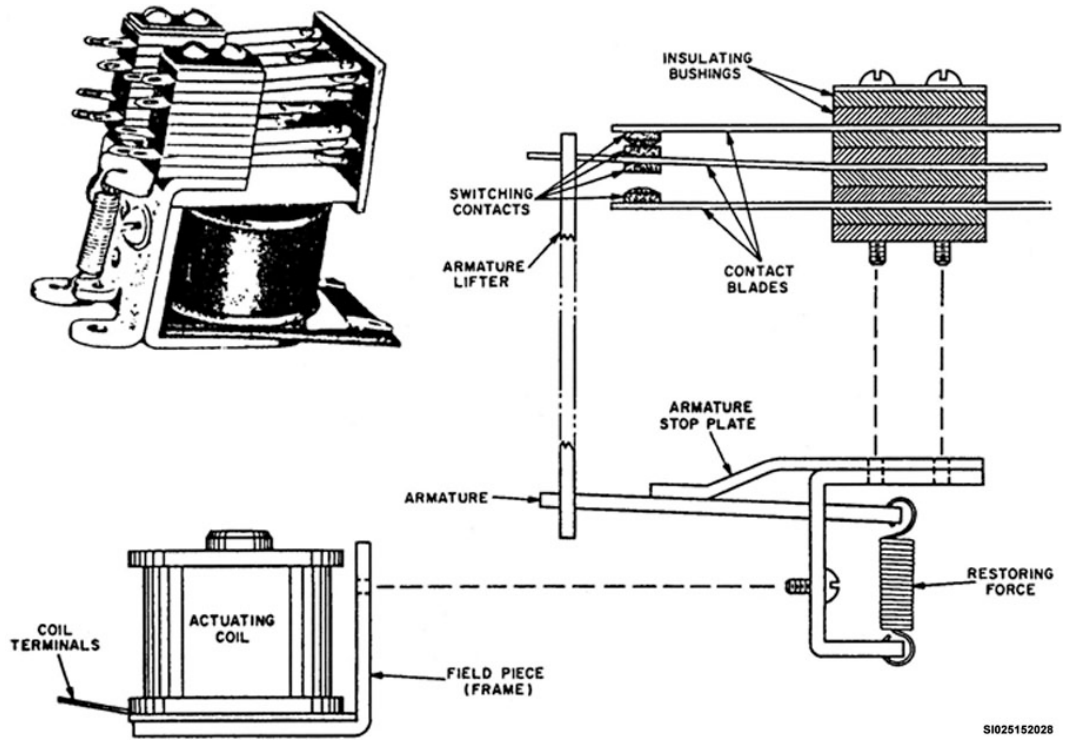

Figure 1–21. Relay construction.

A relay operates on the basis of electromagnetic principles. When power is applied to the coil, an electromagnetic field attracts the movable armature and pulls it toward the coil. When the armature moves, the contacts will either open or close mechanically. Figure 1–22 illustrates a typical relay schematic symbol.

Figure 1–22. Electrical relay schematic symbol.

Some relays are constructed so that some contacts will open and others will close at the same time. The schematic diagram will normally show the position of each contact with the circuit de-energized. When power is applied to the circuit, the contacts will change positions. Contacts are either normally open (NO) or normally closed (NC). Figure 1–23 illustrates the schematic symbol of both types.

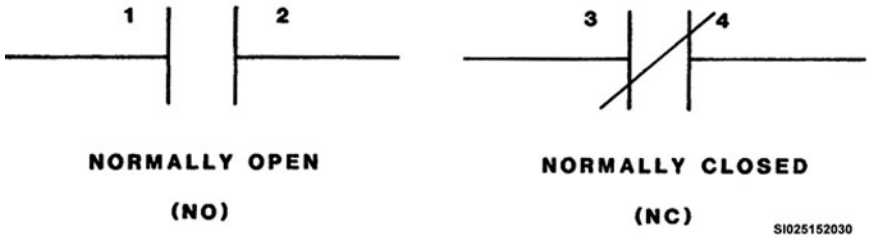

Figure 1–23. Relay contact positions.

Latching relays lock their contacts into position when the coil is energized. The contacts will remain in position until a second (trip) coil is energized. In this type of relay, a return spring is not normally needed.

Solenoids

Solenoids are constructed in the same manner as relays. In a solenoid, the armature is drawn into the center of the core (fig. 1–24). The armature is attached to contacts that will either open or close. A solenoid may be used to open or close a valve, or through mechanical linkage, perform some other mechanical function.

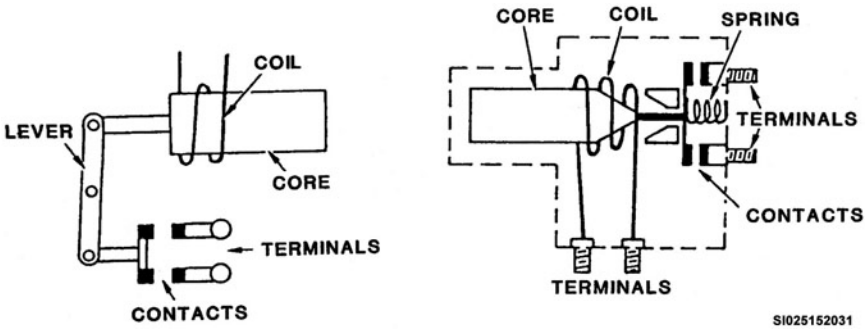

Figure 1–24. Typical solenoid construction.

Diodes

Diodes are semi-conductors that have two electrodes (leads), and they have several uses that are extremely important to the operation of RAWS equipment. Diodes are most commonly used to allow electric current to pass in one direction while blocking it in the opposite direction. In this section, you will learn how diodes are constructed and operate.

Construction

The construction of a diode is relatively simple. A section of the N-type semi-conductor material is joined together with a section of the P-type semi-conductor material. This is called a PN (positive/negative) junction. Figure 1–25 illustrates a diode (PN junction).

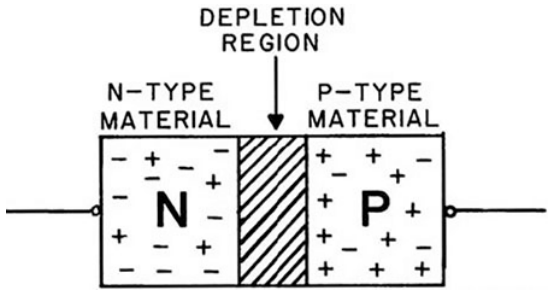

Figure 1–25. PN junction diode.

The area where the N (negative) and P (positive) type material meet is referred to as the depletion region. N-type material has a net negative charge due to an excess of electrons. P-type material has a net positive charge because of a shortage of electrons. The depletion region is neutral and does not have a charge.

Figure 1–26 shows the diode schematic symbol. The vertical bar, which looks like a cat's whisker, is called the cathode. The cathode is the N-type material. The arrow-shaped part is referred to as the anode; the anode is constructed of P-type material. Normally, a diode is designated "CR" on the schematic diagram.

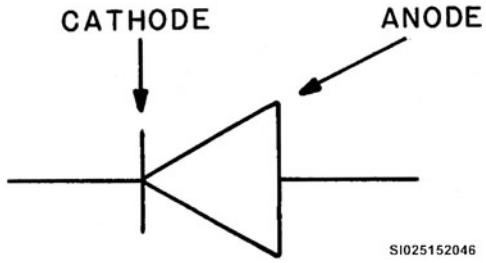

Figure 1–26. Diode schematic symbol.

Operation

When potential is applied to the PN junction, the depletion region will either expand or contract, that is, become biased. When the potentials are connected to the diode, as shown in figure 1–27, the depletion region will become smaller. This is called forward-biasing.

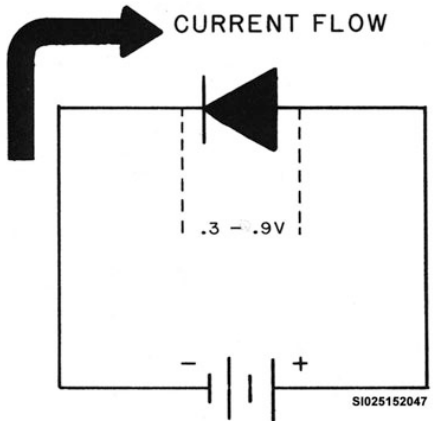

Figure 1–27. Forward-biased diode.

The electrons from the negative side of the power source will repel the electrons in the N-type material; the electrons are repelled through the junction toward the P-type material. Meanwhile, the positive side of the power source repels the positive holes in the P-type material toward the N-type material. The positive side of the power source also attracts the electrons from the P-type material. As you can see, when a diode is forward-biased, the size of the depletion region will be reduced. When the depletion region is reduced, its resistance will also decrease. This will allow electrons to flow from the cathode to the anode.

Remember that current will flow against the arrow; the depletion region still has some resistance. This resistance will develop a small amount of potential. The exact amount of potential developed by the forward-biased diode will depend on the type of material used to construct the diode. Normally, this potential will be from 0.3 volt to 0.9 volt. If the battery leads are reversed, the diode is reverse-biased (fig. 1–28).

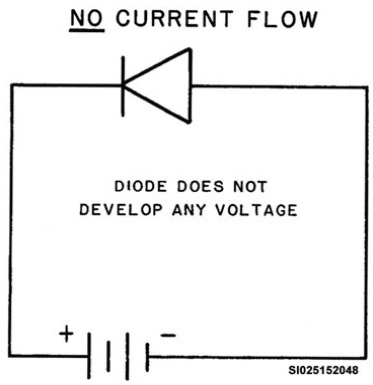

Figure 1–28. Reverse-biased diode.

The positive side of the power source is now connected to the N-type material, causing the electrons in the N-type material to be attracted to the positive power source. Then, the negative side of the power source will attract the positive holes from the P-type material, causing the depletion region to become larger. The larger depletion region will now have a larger amount of resistance, blocking current flow through it.

Transistors

The two basic purposes of a transistor are either to perform as a switch or amplify a circuit. Its basic operation is slightly more complex than a diode. In many ways, the construction of the transistor is the same as the diode. Sections or wafers are put together to make up the P- and N-type material necessary to make the transistor operate.

Construction

The bipolar transistor consists of a PN and NP junction (fig. 1–29). There are three leads to a bipolar transistor: emitter, collector, and base.

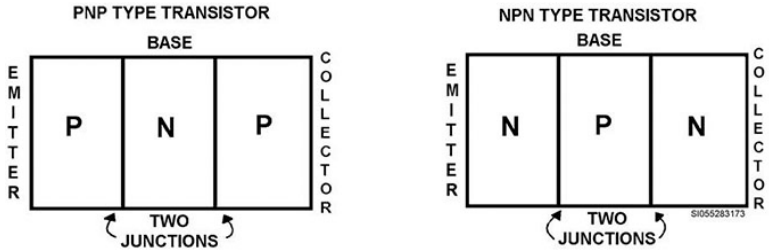

Figure 1–29. Transistor block diagram.

The purpose is to have the emitter supply charges to either allow holes or electrons through the *base* to the *collector*. The *base* forms two junctions between the emitter and collector to control the collector current.

Control circuits

The emitter-base (E-B) junction of the transistor is responsible for turning the transistor ON and is often referred to as the control circuit. When the transistor is turned on, the control circuit is forward biased and current flows through the emitter-collector (E-C) junction. The E-C junction is called the load circuit. The bipolar transistors operate on barrier voltages similar to the ones in our previous discussions. The barrier voltage in the control circuit (E-B) is essentially a constant voltage. However, the barrier voltage in the load circuit (E-C) depends on the amount of current flowing through the control circuit.

There is a simple method to help you remember the biasing of a transistor. In order to understand, observe the direction of the arrow on the emitter in figure 1–30.

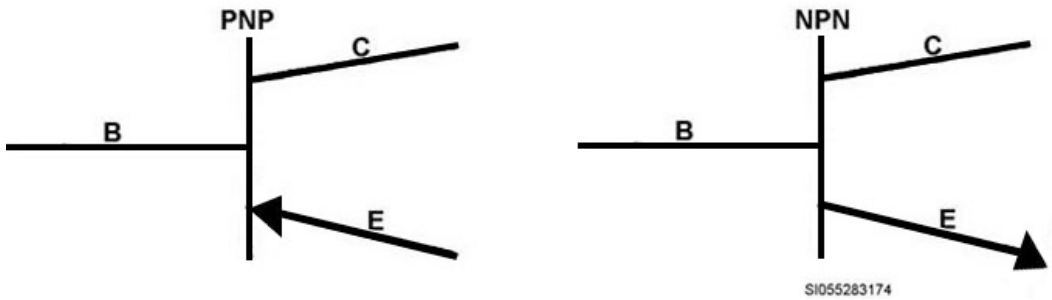

Figure 1–30. Transistor schematic diagram.

In a schematic diagram, current flow is *always against* the arrow when the transistor is forward biased. In other words, if the arrow is always pointing toward the emitter, then the emitter is the most negative point on the transistor and is called an NPN (negative/positive/negative) transistor. If the arrow is pointing away from the emitter, then the emitter is the most positive point on the transistor and is called a PNP (positive/negative/positive) transistor. When the E-B junction is forward biased, the collector-base junction is automatically reverse biased.

Transistor amplifier

There are two terms you should be familiar with—amplification and amplifier. Amplification is the process of increasing the strength of a *signal*. A signal is just a general term used to refer to any particular current, voltage, or power in a circuit. An amplifier is the device that provides amplification (the increase in current, voltage, or power of a signal) without appreciably altering the original signal.

Transistors are frequently used as amplifiers. Some transistor circuits are current amplifiers and have a small load resistance. Transistor circuits designed for voltage amplification usually have a high load resistance. Modern transistor audio amplifiers can amplify power up to a few hundred W and are relatively inexpensive.

Zener diodes

Continued operation of a general purpose diode with reverse current flow will usually result in the destruction of the device. However, the Zener diode is specifically designed to operate in the reverse bias mode.

Reverse bias

When a semi-conductor device is biased in the reverse direction, the flow of electric current is reduced to a few millionths of an ampere (micro amps). Reverse current will remain at a very low level until the diode breakdown voltage is reached. At the breakdown point, current will increase very sharply in the reverse direction. The point at which the diode breaks down is referred to as the Zener point, avalanche point, or breakdown point.

Operation

As long as the Zener diode's current rating is not exceeded, the diode exhibits a constant voltage development. The ability of the Zener diode to maintain a constant voltage development makes it useful as a voltage regulator. The Zener diode acts as a normal diode when the Zener is connected in the forward-bias direction. When the diode is biased in the reverse direction, very little current flows until it reaches the diode's peak inverse voltage rating. If operated in this region for any length of time, the general purpose diode will overheat. Heating causes current to increase. An increase in current causes a corresponding increase in heat. The end result is a destroyed diode. This is called thermal runaway.

Light-emitting diodes

The light-emitting diode (LED) was developed to replace the fragile, short-life, incandescent light bulbs used to indicate on/off conditions on panels. An LED is a diode that produces visible light when forward-biased. The light may be red, green, or amber, depending upon the material used to make the diode. The most common type of LED (red) is constructed of gallium arsenide and silicon. The plastic case acts like a reflective lens to disperse the light produced by the diode. Figure 1–31 shows an LED and its schematic symbol and components.

Figure 1–31. Light-emitting diode.

The LED is designated by a standard diode symbol with two arrows pointing away from the cathode. The arrows indicate light leaving the diode. The circuit symbols for all opto-electronic devices have arrows pointing either towards them, if they *use* light, or away from them, if they *produce* light. The LED operating voltage is small, about 1.6 V forward-bias and generally about 10 milliamp (mA). The life expectancy of the LED is very long, normally over 100,000 hours of operation.

Integrated circuits

An integrated circuit (IC) is a device that integrates (combines) both active components (transistors, diodes, etc.) and passive components (resistors, capacitors, etc.) of a complete electronic circuit in a single chip (a tiny slice or wafer of semiconductor crystal or insulator).

ICs have almost eliminated the use of individual electronic components (resistors, capacitors, transistors, etc.) as the building blocks of electronic circuits. Instead, tiny chips have been developed whose functions are not that of a single part, but of dozens of transistors, resistors, capacitors, and other electronic elements, all interconnected to perform the task of a complex circuit. Often these comprise a number of complete conventional circuit stages, such as a multistage amplifier (in one extremely small component). These chips are frequently mounted on a printed circuit board, as shown in figure 1–32, which plugs into an electronic unit.

Figure 1–32. Integrated circuits on a printed circuit board.

Integrated circuits have several advantages over conventional wired circuits of discrete components. These advantages include:

- Drastic reduction in size and weight.
- Large increase in reliability.
- Lower cost.
- Possible improvement in circuit performance.

However, integrated circuits are composed of parts so closely associated with one another that repair becomes almost impossible. In case of trouble, the entire circuit is usually replaced as a single component.

Integrated circuits are being used in an ever-increasing variety of applications. Small size and weight and high reliability make them ideally suited for use in airborne equipment, missile systems, computers, spacecraft, and portable equipment. They are often easily recognized because of the unusual packages that contain the integrated circuit. A typical packaging sequence is shown in figure 1–33. These tiny packages protect and help dissipate heat generated in the device. One of these packages may contain one or several stages, often having several hundred components.

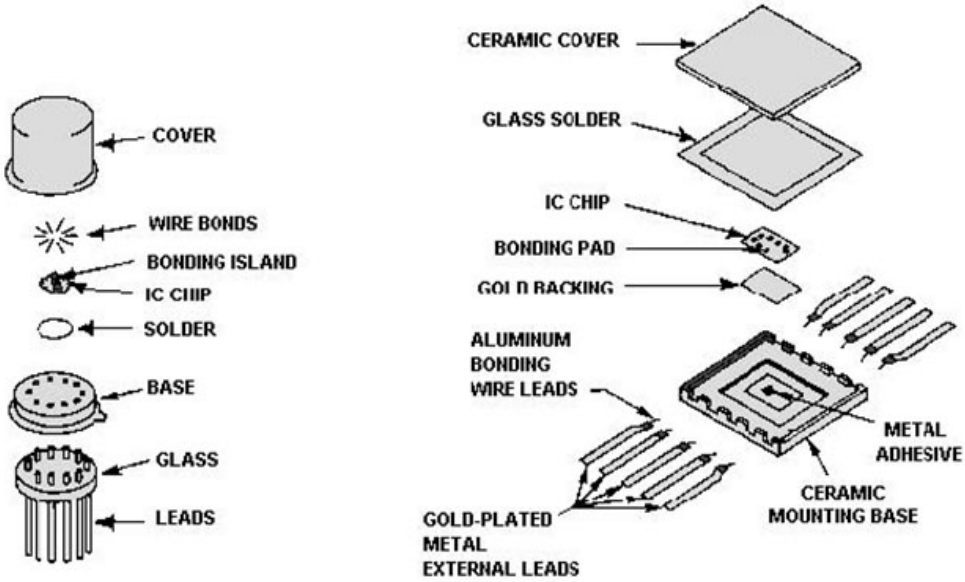

Figure 1–33. A typical integrated circuit packaging sequence.

005. Electronic circuits

Now that you know the characteristics of the basic components, it is now time to see how they work together in a circuit. Before diving into the depths of circuit operation, this section explains Ohm's Law and how it is a helpful tool when troubleshooting equipment circuits.

Ohm's Law

Ohm's Law states current is directly proportional to the applied voltage and inversely proportional to the resistance. The Ohm's Law formula uses *E* for voltage, *I* for current, and *R* for resistance. Figure 1–34 shows the various mathematical relationships among these three factors. In the following sections, we will use Ohm's Law to calculate various circuit values.

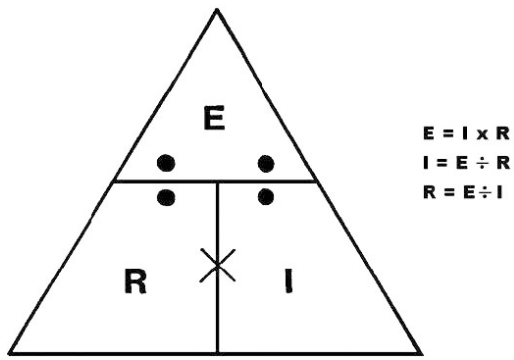

Figure 1–34. Ohm's Law relationships.

Series circuit operation

In a series circuit, current only flows in one path; that is, the current leaves the battery, flows through all devices in the circuit, and returns to the battery. Figure 1–35 shows simple series circuits. From the values given in figure 1–35(A), use the formula below for Ohm's law to compute the circuit current (I):

$$I = \frac{E}{R}$$

$$I = \frac{24V}{60\Omega}$$

$$I = .4 \text{ amps or } 400 \text{ milliamps (mA)}$$

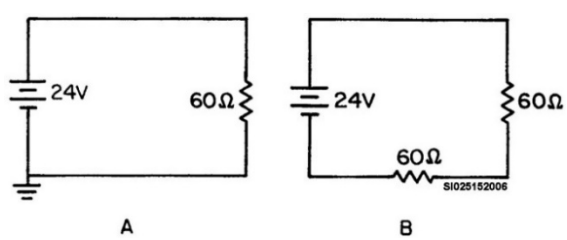

Figure 1–35. Simple series circuits.

Since 1 mA is equal to .001 A, then .4 x 1000 mA = 400 mA. The circuit current is therefore equal to .4 A or 400 mA. Either form is acceptable. Figure 1–35(B) shows the same circuit, but another 60 Ω of resistance has been added. Current is now:

$$I = \frac{E}{R}$$

$$I = \frac{24V}{120\Omega}$$

$$I = .2 \text{ amps or } 200 \text{ mA}$$

From this, you can see the effect of adding resistance in series in a circuit. Current is reduced as the amount of resistance increases. The opposite is also true: current increases as circuit resistance decreases. The next few paragraphs will explain total measurements, expressed as (T). Figure 1–36 shows another basic series circuit. Figure 1–36(A) is the schematic diagram but (B) displays the equivalent circuit in basic terms of resistance.

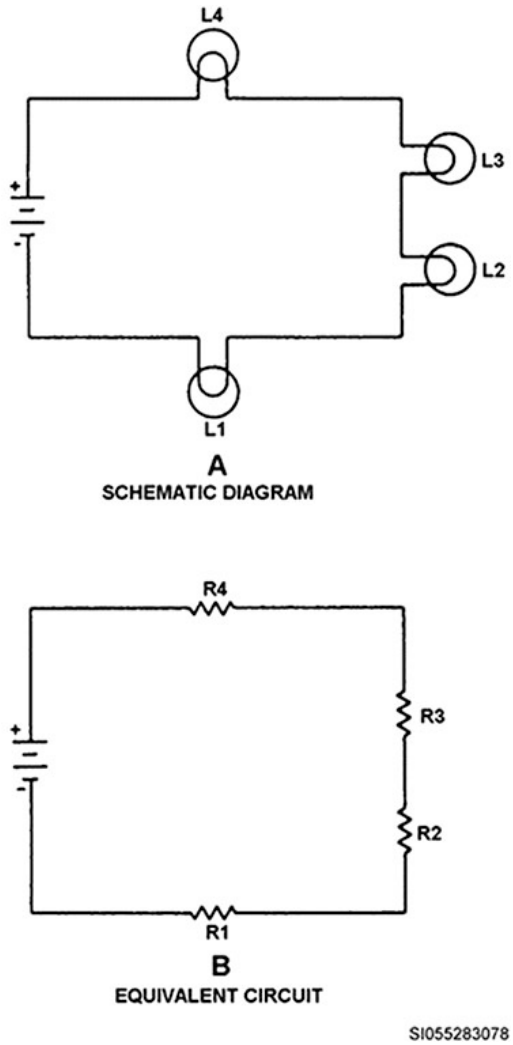

Figure 1–36. Series circuit.

Total resistance

Total resistance in a series circuit is the sum of all the individual resistances in the circuit. The formula is: RT = R1 + R2 + R3, and so forth. If the resistors in figure 1–36(B) each have a value of 3 ohms, total resistance for the circuit is 12 ohms. Therefore, RT = 3 + 3 + 3 + 3 = 12. Try it again using the following values: R1 = 12 ohms, R2 = 3 ohms, R3 = 7 ohms, and R4 = 10 ohms. It's easy to see the total resistance is 32 ohms.

Total current

Total current in a series circuit remains the same through the entire circuit. Therefore, IT = I1 = I2 = I3 and so forth. It should be obvious that if there is only one path for current to flow, then it must be the same throughout the entire circuit.

Total voltage

The final characteristic of a series circuit is the effect it has on voltage. Total voltage is equal to the sum of the individual voltage drops throughout the circuit. Therefore, ET = E1 + E2 + E3 and so forth. Take a look at figure 1–36(B) again. If there is a 6 V drop across each of the four resistors, total voltage in the circuit is: ET = 6 V + 6 V+ 6 V + 6 V = 24 V. We now know RT = 12 ohms and ET = 24 V. Using Ohm's law we can calculate the total current in this circuit by using the following formula:

$$\mathrm{IT} = \frac{\mathrm{ET}}{\mathrm{RT}} \text{ or for this particular example, } \mathrm{IT} = \frac{24}{12} = 2 \text{ amps}$$

Parallel circuit

A parallel circuit has more than one path for current to flow. Figure 1–37 shows the difference between a series circuit and a parallel circuit.

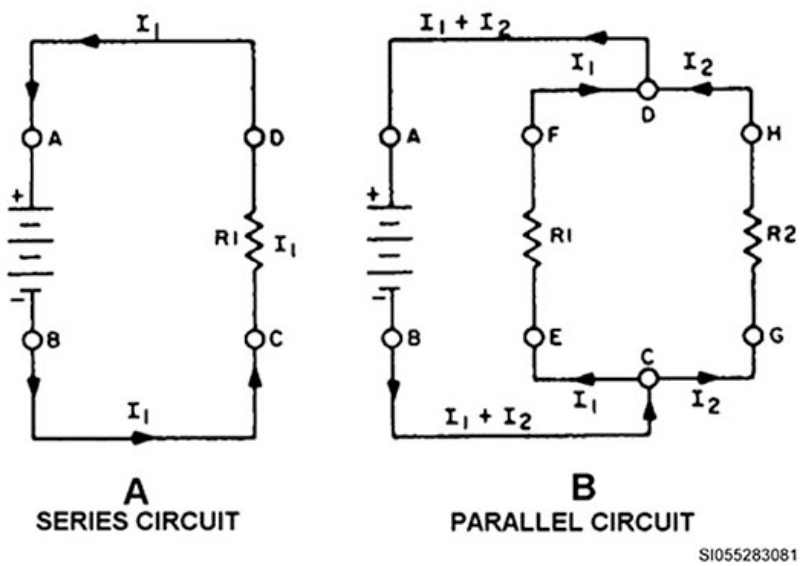

Figure 1–37. Circuit comparison.

Total voltage

Total voltage in a parallel circuit is the same across each parallel branch and the formula is as follows:

ET = E1 = E2 = E3 and so forth.

Total current

Total current in a parallel circuit is equal to the sum of the individual branch circuits. Its formula is as follows:

IT = I1 + I2 + I3 and so forth.

Total resistance

Total resistance in a parallel circuit is smaller than the smallest branch resistance. In a parallel circuit, there are three methods used to calculate total resistance—reciprocal, equal resistance, and product sum.

Reciprocal method

The first method is known as the *reciprocal method*: $\frac{1}{RT} = \frac{1}{R1} + \frac{1}{R2} + \frac{1}{R3}$

Here is a sample problem, as described in the table below: $\frac{1}{RT} = \frac{1}{10} + \frac{1}{20} + \frac{1}{10}$

Reciprocal method to find total resistance	
Steps	**Finding the solution**
1. Find a common denominator:	$\frac{1}{RT} = \frac{2}{20} + \frac{1}{20} + \frac{2}{20}$
2. Now add the fractions:	$\frac{1}{RT} = \frac{5}{20}$
3. Invert both sides of the formula:	$\frac{RT}{1} = \frac{20}{5}$
4. Reduce the fraction:	$RT = 4$ ohms

Equal resistance method

The second method to compute resistance in a parallel circuit is called the *equal resistance method*. It's used when the resistance across each parallel branch is equal. The equal resistance method formula is as follows:

$$RT = \frac{\text{value of one resistor}}{\text{number of resistors}}$$

If our parallel circuit has three branches and each branch has a 6-ohm resistor, we compute total resistance like this:

$$RT = \frac{6}{3} = 2 \text{ ohms}$$

Product sum method

Our last method to calculate resistance in a parallel circuit is called the *product sum method*. It's used in circuits having two parallel resistances of different values and the formula is:

$$RT = \frac{R1 \text{ x } R2}{R1 + R2}$$

If the value of R1 = 5 ohms and the value of R2 = 20 ohms, we can find total resistance by adding the values of R1 and R2 to our formula:

$$RT = \frac{5 \text{ x } 20}{5 + 20} = \frac{100}{25} = 4 \text{ ohms}$$

At this point, you should have a thorough understanding of the relationship between current, voltage, and resistance in parallel circuits. Remember, there are three main properties of a parallel circuit:

- Total voltage is equal to each of the branch voltages.
- Total current is the sum of each of the branch currents.
- Total resistance is *always* smaller than the smallest branch resistance.

Troubleshooting circuits

So far, you have learned the basic electrical theory required for effective equipment troubleshooting. The following discussions cover the three most common electrical malfunctions—opens, shorts, and unwanted grounds.

Opens

An open is simply a break in the path of flowing current. In other words, the current no longer can flow in a continuous path. An open circuit causes resistance to increase, current decreases to zero, and maximum voltage to develop across the open component. When you troubleshoot the circuit, a higher than normal total resistance is found. In fact, the open part of the circuit has no continuity, and gives an over load (OL) indication on an ohmmeter.

Shorts

A short is caused by a loss of resistance in a component. It normally occurs between two points in a component or to ground. One of the first indications of a short circuit is excessive current flow through a component causing a fuse to blow or circuit breaker to trip. If the circuit doesn't have a protective device, the wires become very hot and will probably melt. In a short circuit, current increases, resistance decreases, and voltage across the shorted component is zero.

Unwanted grounds

The symptoms of an unwanted ground are similar to the symptoms of a short circuit. The only difference is an unwanted ground involves a portion of the circuit instead of a single component. One way this happens is for a bare wire to touch another wire or the frame of the unit.

Power supply circuits

Most power supplies are made up of four basic sections: a transformer, a rectifier, a filter, and a regulator. The transformer steps up or steps down the input line voltage and isolates the power supply from the power line. The rectifier section converts the AC input signal to a pulsating DC. However, pulsating DC is not desirable. For this reason, a filter section is used to convert pulsating DC to a purer, more desirable form of DC voltage. The final section, the regulator, does just what the name implies. It maintains the output of the power supply at a constant level in spite of large changes in load current or input line voltages. Since the transformer has already been explained in a previous section, the focus here will be on the rectifier, filter, and regulator.

Rectifier

The rectifier circuit, which is usually made up of interlocking diodes, converts AC signals to DC. In common AC current, the voltage swings from positive to negative in cycles that repeat 60 times per second. If you place a diode in series with an AC voltage, you eliminate the negative side of the voltage cycle, so you end up with just positive voltage. This type of rectification is called *half wave*. Figure 1–38 illustrates a typical half wave circuit and shows the output waveform. It consists of intervals that alternate between a short increase of voltage and periods of no voltage at all. This is a form of DC because it consists entirely of positive voltage. However, it pulsates—first it's on, then it's off, then it's on again, and so on.

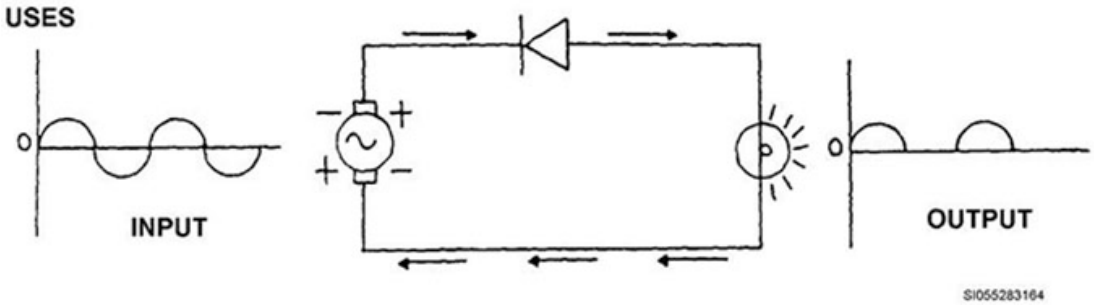

Figure 1–38. Half wave rectifier.

One of the most common uses for diodes is found in a bridge rectifier circuit (fig. 1–39). A bridge rectifier is used to change both half cycles of AC into DC.

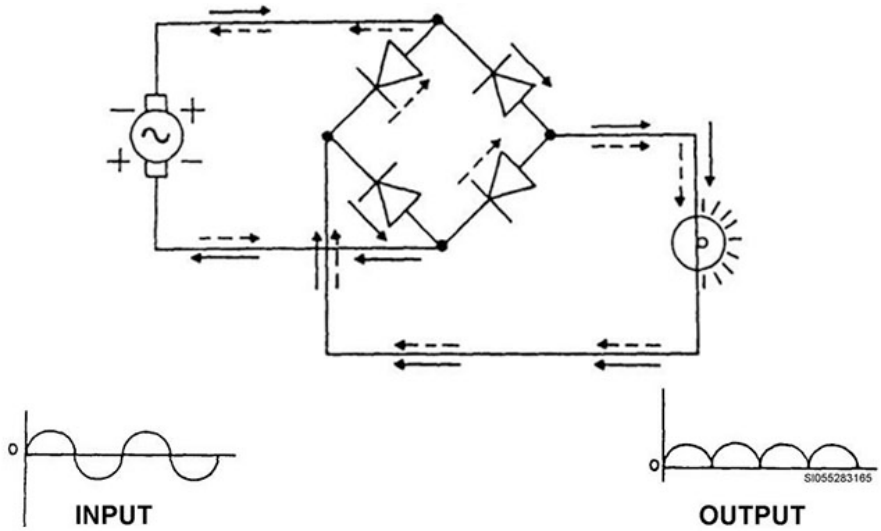

Figure 1–39. Full wave (bridge) rectifier.

In a bridge rectifier circuit, the diodes are arranged to allow the entire sine wave to rectify. Each cycle of the AC source uses two diodes. This type of rectification is called *full wave* rectification because both halves of the AC sine wave are allowed to pass through a set of diodes. The output is still pulsating DC; however, it is easier to filter or smooth out.

The number of pulses in the DC output is called ripple frequency. In half wave rectification, the ripple frequency is the same as the applied AC frequency. For example, if the AC source has a frequency of 60 Hz, in half wave rectification the ripple frequency is 60 ripples. In full wave rectification, the ripple frequency is twice the applied AC frequency, so the ripple frequency would be 120 ripples.

Notice that during half of the cycle, two diodes are forward biased while the other two are reverse biased. During the second half of the cycle, the opposite two diodes are forward biased, while the original two are now reverse biased. This arrangement allows both half cycles of AC to be applied to the load and increases the ripple frequency. This provides the load with a higher average voltage, and allows easier and more effective filtering of the pulsating DC voltage.

Filter

While the output of a rectifier is a pulsating DC, most electronic circuits require a substantially pure DC for proper operation. This type of output is provided by single or multi-section filter circuits placed between the output of the rectifier and the load. There are many different types of filtering circuits but they ultimately perform the same overall task.

Filtering is accomplished by the use of capacitors, inductors, and/or resistors in various combinations. Inductors are used as series impedances to oppose the flow of alternating (pulsating DC) current. Capacitors are used as shunt elements to bypass the alternating components of the signal around the load (to ground). Resistors are used in place of inductors in low current applications.

Regulator

Many circuits are designed to operate with a particular supply voltage. When the supply voltage changes, the operation of the circuit may be adversely affected. Consequently, some types of equipment must have power supplies that produce the same output voltage regardless of changes in the load resistance or changes in the AC line voltage. This constant output voltage may be achieved by adding a circuit called the voltage regulator at the output of the filter.

Voltage regulator circuits are additions to basic power supply circuits, which are made up of rectified and filter sections. The purpose of the voltage regulator is to provide an output voltage with little or no variation. Regulator circuits sense changes in output voltages and compensate for the changes. Regulators that maintain voltages within plus or minus (±) 0.1 percent are quite common.

Troubleshooting power supplies

As you know, troubleshooting is a method of detecting and repairing problems in electronic equipment. Two commonly used methods are the visual check and signal tracing. The visual check allows the technician to make a quick check of component problems, such as shorts, discolored or leaky transformers, loose or broken connections, damaged resistors or capacitors, smoking parts, or sparking. The signal tracing method is used when the technician cannot readily see the problem and needs to use test equipment. Component failure is also important in troubleshooting. In transformers, a winding can open, or two or more windings can short; either to themselves or to the case that is usually grounded. In a capacitor only two things can occur: either it can short and act as a resistor, or it can open, removing it from the circuit. A resistor can open, increase in value, or decrease in value.

Wave generating and shaping circuits

Wave generators play a prominent role in the field of electronics. They generate signals from a few hertz to several gigahertz. Modern wave generators use many different circuits and generate such outputs as sinusoidal, square, rectangular, sawtooth, trapezoidal, and trigger wave shapes as displayed in figure 1–40. These wave shapes serve many useful purposes in electronic circuits. Also, the shaping of waveforms is critical to certain circuits in order to obtain a specified outcome.

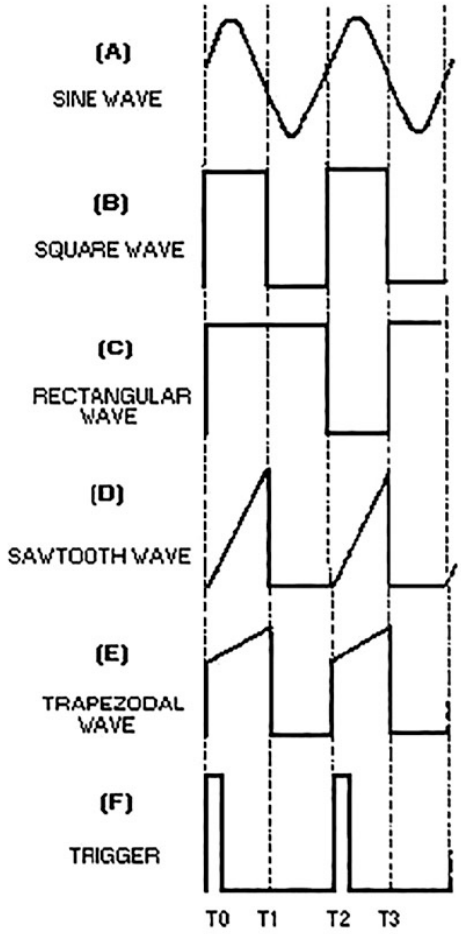

Figure 1–40. Waveforms.

Oscillators

One type of wave generator is known as an oscillator. An oscillator can be thought of as an amplifier that provides itself (through feedback) with an input signal. By definition, it is a nonrotating device for producing AC, with the output frequency of which is determined by the characteristics of the device. The primary purpose of an oscillator is to generate a given waveform, at a constant peak amplitude and specific frequency, and to maintain this waveform within certain limits of amplitude and frequency.

An oscillator must provide amplification. Amplification of signal power occurs from input to output. In an oscillator, a portion of the output is fed back to sustain the input (fig. 1–41). Enough power must be fed back to the input circuit for the oscillator to drive itself, as does a signal generator. To cause the oscillator to be self-driven, the feedback signal must also be *regenerative,* or positive. Regenerative signals must have enough power to compensate for circuit losses and to maintain oscillations. Wave generators can be classified into two broad categories according to their output wave shapes—sinusoidal and non-sinusoidal.

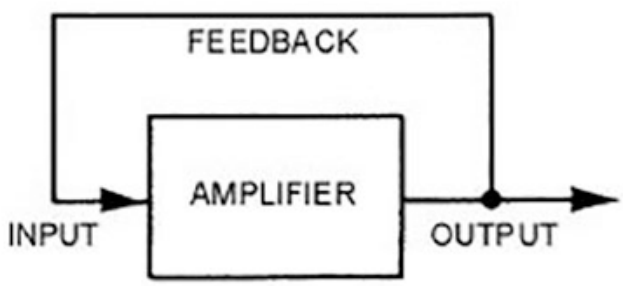

Figure 1–41. Basic oscillator block diagram.

Sinusoidal oscillators

A sinusoidal oscillator produces a sine-wave output signal. Ideally, the output signal is of constant amplitude with no variation in frequency. Actually, something less than this is usually obtained. The degree to which the ideal is approached depends upon such factors as class of amplifier operation, amplifier characteristics, frequency stability, and amplitude stability.

Non-sinusoidal oscillators

Non-sinusoidal oscillators generate complex waveforms, such as square, rectangular, trigger, sawtooth, or trapezoidal. Because their outputs are generally characterized by a sudden change, or relaxation, they are often referred to as “relaxation oscillators.” The signal frequency of these oscillators is usually governed by the charge or discharge time of a capacitor in series with a resistor. Some types, however, contain inductors that affect the output frequency.

Wave-shaping circuits

Many different types of circuits can shape a waveform for whatever reason necessary. This section will briefly describe two of the most popular—the limiter and the clamping circuit.

Limiter circuit

A limiter is the most common wave-shaping device used. It limits or prevents some part of a waveform from exceeding a specified value. They also amplify signals that have amplitudes less than the desired amplitude so the output signal from the limiter is approximately constant in amplitude.

There are four general methods of limiting. These methods are explained in the following table.

Methods of Limiting	
Method	**Action**
Grid Limiting	Limits positive peaks of the input signal to a constant level, but because of the grid-to-plate phase inversion, it is the negative peaks that are limited in the output voltage.
Cutoff Limiting	Limits positive peaks of the output voltage by making use of the plate current cutoff characteristics of the tube.
Saturation Limiting	Limits negative peaks of the output voltage.
Overdriven Amplifier	Limits both positive and negative peaks of the output voltage.

Clamping circuit

A clamping circuit effectively clamps, or ties down, the upper or lower extremity of a waveform to a fixed DC potential. Clamping does not change the amplitude or shape of the input waveform. A positive clamper will clamp the lower extremity of the input waveform to a DC potential of 0 V. A negative clamper will clamp the upper extremity of the input waveform to a DC potential of 0 V.

Digital circuits

In order to understand how digital circuits work, we need to start with the numbering systems they use. After getting a basic knowledge of how digital systems convert information for transfer, logic circuit theory and applications will be explained.

Numbering systems

In digital electronics, the number system is used for representing the information. The next sections will describe the most commonly used systems and set the foundation for how digital circuits use binary, hexadecimal, and binary coded decimal systems to calculate large amounts of data.

Binary number system

The simplest number system is the binary, or base 2, system. This system uses only two symbols, typically “0” and “1,” and refers to each digit as “bits.” Counting in binary is similar to counting in any other number system. Beginning with a single digit, counting proceeds through each symbol, in increasing order. In the binary system, each digit represents an increasing power of 2, with the rightmost digit representing 2^0, the next representing 2^1, then 2^2, and so on. The equivalent decimal representation of a binary number is sum of the powers of 2, which each digit represents. Look at the tables below as it describes how this works.

Correlation of base 2 to decimal						
Base 2	2^5	2^4	2^3	2^2	2^1	2^0
Decimal	32	16	8	4	2	1

Now let’s add another row to calculate the binary equivalent of the number 7. By adding a “1” bit in the column of the numbers that correspond to the decimal numbers that add up to 7 we get our binary number.

Converting decimal to binary						
Base 2	2^5	2^4	2^3	2^2	2^1	2^0
Decimal	32	16	8	4	2	1
Binary	0	0	0	1	1	1

As you see above, we added “1” bits under the base 2 columns of 2^2, 2^1, and 2^0. This added the decimal equivalents of 4 + 2 + 1 to equal 7. The binary equivalent would be 111. Now try converting the number 19 to binary:

$$16 + 2 + 1 = 19$$

Add a 1 bit in each column to get 10011 as the binary equivalent as seen below.

Converting decimal to binary						
Base 2	2^5	2^4	2^3	2^2	2^1	2^0
Decimal	32	16	8	4	2	1
Binary	0	1	0	0	1	1

Hexadecimal numbering system

In mathematics and computing, hexadecimal (also base 16, or hex) is a positional numeral system with a base of 16. It uses sixteen distinct symbols, most often the symbols 0–9 to represent values zero to nine, and A–F (or alternatively a–f) to represent values ten to fifteen.

Hexadecimal numerals are widely used by computer system designers and programmers, as they provide a more human-friendly representation of binary-coded values. Each hexadecimal digit represents four binary digits, also known as a nibble, which is half a byte. For example, a single byte can have values ranging from 0000 0000 to 1111 1111 in binary form, which can be more conveniently represented as 00 to FF in hexadecimal. The table below shows all hexadecimal characters and their correlation to decimal and binary values.

Decimal	Hexadecimal	Binary
0	0	0000
1	1	0001
2	2	0010
3	3	0011
4	4	0100
5	5	0101
6	6	0110
7	7	0111
8	8	1000
9	9	1001
10	A	1010
11	B	1011
12	C	1100
13	D	1101
14	E	1110
15	F	1111

Binary coded decimal

In binary coded decimal (BCD) each decimal digit is represented by a group of four binary digits or bits in much the same way as hexadecimal. For the 10 decimal digits (0 to 9) a 4-bit binary code is needed. Do not confuse BCD and hexadecimal, as they are similar but very different. Whereas a 4-bit hexadecimal number is valid up to F representing binary 1111 (decimal 15), BCD numbers stop at 9 binary represented as 1001. Although 16 numbers can be represented using four binary digits, the BCD numbering system restricts the use of 10 through 15 and classifies them as forbidden numbers. Now let’s use the table above and add the BCD equivalent.

Decimal	Hexadecimal	Binary	BCD
0	0	0000	0000 0000
1	1	0001	0000 0001
2	2	0010	0000 0010
3	3	0011	0000 0011
4	4	0100	0000 0100
5	5	0101	0000 0101
6	6	0110	0000 0110
7	7	0111	0000 0111
8	8	1000	0000 1000
9	9	1001	0000 1001
10	A	1010	0001 0000
11	B	1011	0001 0001
12	C	1100	0001 0010
13	D	1101	0001 0011
14	E	1110	0001 0100
15	F	1111	0001 0101

As you can see, each 4-bit BCD segment corresponds to the actual digit number. In the BCD representation of decimal 15, the first 4-bit segment is displayed as 1 and the second segment is 5. The representation for a larger number would look like this:

$$357 = 0011\ 0101\ 0111_{(BCD)}$$

First segment (0011) = 3, second segment (0101) = 5, third segment (0111) = 7

The subscript "(BCD)" is used to eliminate confusion between BCD and binary.

Simple logic circuits

A digital circuit has a signal that must be one of two discrete levels. Each level is interpreted as one of two different states (for example, on or off, 0 or 1, true or false). Digital circuits use transistors to create logic gates in order to perform Boolean logic. This logic is the foundation of digital electronics and computer processing. Digital circuits are less susceptible to noise or degradation in quality than analog circuits. It is also easier to perform error detection and correction with digital signals.

Logic level

Digital electronics rely on binary logic to store, process, and transmit data or information. Binary logic refers to one of two states; ON or OFF. This is commonly translated as a binary 1 or binary 0. A binary 1 is also referred to as a HIGH signal and a binary 0 is referred to as a LOW signal. These HIGH and LOW signals can also represent voltages. A HIGH is usually around 5 V and a LOW is usually 0 V.

Logic gates

Logic gates require a power supply and their inputs are driven by HIGH and LOW voltages as described above. A gate usually only has one output except in special cases. There is always a time delay between an applied input and the output. Truth tables are used to help show the function of a logic gate's input and output.

The AND gate is a logic circuit that requires *all* inputs to be HIGH at the same time in order for the output to be HIGH. If *any* input is LOW, The output will be LOW. The name AND implies "one input AND the other" must be HIGH in order to have a HIGH output. This is displayed below in the figure 1–42 truth table.

2-input AND gate

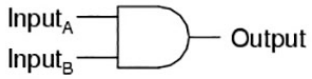

A	B	Output
0	0	0
0	1	0
1	0	0
1	1	1

Figure 1–42. AND gate.

The OR gate will output a HIGH if *any* of the inputs are HIGH. The output of the OR gate goes LOW only if *all* inputs are LOW. The name OR implies "if one input OR the other" is HIGH, the output will be HIGH. This is displayed in figure 1–43 below.

2-input OR gate

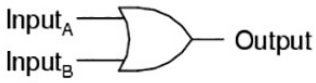

A	B	Output
0	0	0
0	1	1
1	0	1
1	1	1

Figure 1–43. OR gate.

The NAND gate is essentially a NOT and an AND gate. The NAND gate operates the same as an AND gate with a NOT (inverter) gate connected to the output terminal. This is displayed as a small bubble on the output line. The inverter does what you would expect, inverts the output. The truth table is exactly opposite as the AND gate and is displayed in figure 1–44 below.

2-input NAND gate

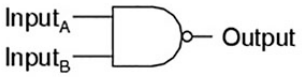

A	B	Output
0	0	1
0	1	1
1	0	1
1	1	0

Figure 1–44. NAND gate.

The NOR gate is an OR gate with its output inverted, just like a NAND gate. The gate only outputs a HIGH when *all* inputs are LOW. This is displayed below in figure 1–45.

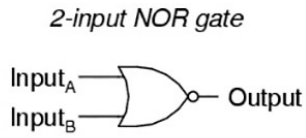

A	B	Output
0	0	1
0	1	0
1	0	0
1	1	0

Figure 1–45. NOR gate.

There are many different types of gates that are used in digital circuits. These are just a few of the basic gates that will help you build a foundation for troubleshooting multiple-gate circuits and more complex logic gates.

Applications

Logic gates are the building blocks of digital electronics and are formed by the combination of transistors in order to create digital operations. Logic circuits include such devices as multiplexers, registers, computer memory, and microprocessors, which may contain more than a million gates. Every digital product, including personal computers, mobile phones, tablets, calculators, and digital watches use logic gates.

006. Other components and circuits

RAWS equipment is constructed with many types of components and circuits. Although this unit cannot cover them all, a brief overview of the most common will help in learning circuit flow for general equipment knowledge as well as troubleshooting. This section will give you some operating characteristics of rectifiers, tubes, and amplifiers. More information can be found in the 31–1–141 series TOs.

Silicon controlled rectifiers

A silicon controlled rectifier (SCR) has three PN junctions and is mainly used as an electronic switch. SCRs are usually used in circuits where current is very high. The SCR (fig. 1–46) differs from a diode as it does not conduct electricity from the anode to the cathode until certain conditions are met. If a positive potential is applied to the anode making it more positive, then the cathode's two outermost PN junctions are forward biased. However, the middle PN junction is reverse biased and current does not flow. Applying a small positive potential to the gate terminal of the SCR forward biases the middle junction, turns the SCR on, and allows a large current flow from the cathode to the anode. Once the SCR is turned on, it continues to conduct electricity even if the gate potential is removed. The SCR can only be turned off by interrupting the circuit or reversing the potential to the anode and cathode.

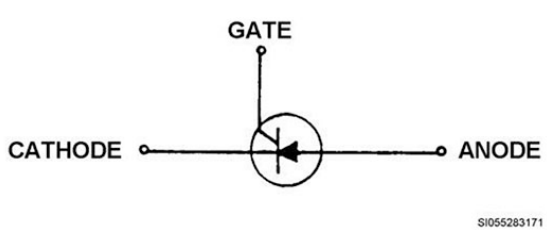

Figure 1–46. Schematic symbol of a SCR.

SCRs come in various types and sizes. They are categorized according to the current they can switch. Low current SCRs can switch up to one amp at up to 100 V—meaning signals measuring from zero to one amp in current with a maximum of 100 V in power. Medium current SCRs can switch up to 10 A at up to several hundred volts. High current SCRs can switch up to 2,500 at up to several thousand volts.

High power tubes

A vacuum tube is a device that controls electric current between electrodes in an evacuated container. Vacuum tubes mostly rely on thermionic emission of electrons from a hot filament or a heated cathode. This type is called a thermionic tube. A phototube achieves electron emission through the photoelectric effect. Not all electronic circuit electron tubes are vacuum tubes (evacuated). Gas-filled tubes are similar devices containing a gas, typically at low pressure, which exploit phenomena related to electric discharge in gases, usually without a heater.

The simplest vacuum tube, the diode, contains only a heater, a heated electron-emitting cathode (the filament itself acts as the cathode in some diodes), and a plate (anode). Current can only flow in one direction through the device between the two electrodes, as electrons emitted by the cathode travel through the tube and are collected by the anode. Adding one or more control grids within the tube allows the current between the cathode and anode to be controlled by the voltage on the grid or grids. Tubes with grids can be used for many purposes, including amplification, rectification, switching, oscillation, and display.

Conventional circuits and components do not lend themselves to microwave operation. To operate at these frequencies, it is necessary to make use of components and equipment that meet the requirements of high frequency operation. Microwave tubes overcome the following conventional problems and can be used in high power, high frequency oscillators and amplifiers:

- Radio frequency (RF) radiation losses in external circuitry.
- Inter-electrode capacitance.
- Electron transit time.
- Lead inductance.

To accommodate for the large amount of transmitted power required for radars, special tubes are needed. Some of the more well-known tubes are the Magnetron and Traveling Wave Tube, used in mobile radars. The Klystron is utilized in the Next-Generation Radar for high gain and the Twystron is used in the AN/TPS–75 for high gain and frequency agility.

Amplifiers

Amplifier circuits are generally made up of transistors to control current flow to a load. They usually have a variable resistor in series with the emitter-base (E-B) current. Now let's break down signal flow and the different types of amplifiers.

Signal

Transistor amplifiers are used in circuits where the amount of signal is important. One typical use is to amplify a radio signal in a stereo system. In the amplifier, a small E-B current can control a large emitter-collector (E-C) current. By increasing the E-B current, a larger current can flow through the E-C circuit. Conversely, if the E-B current is decreased, a corresponding decrease in the E-C current occurs. Notice the current flow to the base (fig. 1–47) is controlled by adding resistance to the E-B circuit.

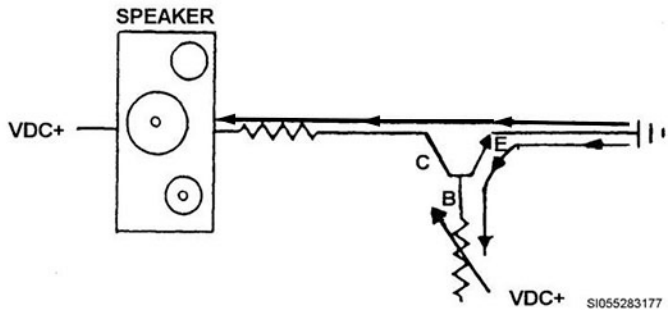

Figure 1–47. Transistor amplifier circuit.

This increase in resistance causes a decrease in the current flow through the E-B circuit. Less current in the control circuit causes an increase in the E-C resistance and a decrease in the E-C current. By varying the E-C resistance, the voltage drop across the E-C changes. More resistance causes a greater voltage to develop across the E-C and less voltage to the load. A decrease in resistance in the E-C causes an increase in the E-C current and a decrease in the voltage developed across the E-C terminals, allowing more voltage to the load. As you can see, varying the E-B current varies the voltage to the load. Amplification, then, is merely using small changes in the control circuit (E-B) to control larger changes in the load circuit (E-C).

Types of transistor amplifier circuits

Figure 1–48 illustrates three types of amplifiers you will most likely encounter in electronic circuitry—common emitter, common collector, and common base. In these type applications, the common lead is tied to both the input and output sides of the circuit. One way to determine the common lead is to locate which one is referenced to a constant potential. In figure 1–48, the common lead is referenced to a constant voltage and is connected through the circuit to the input and output leads.

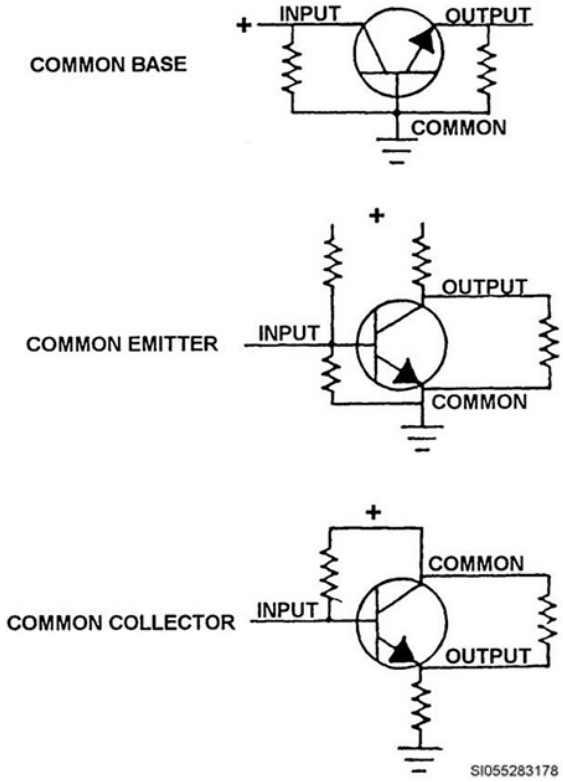

Figure 1–48. Types of transistor amplifier circuits.

Self-Test Questions

After you complete these questions, you may check your answers at the end of the unit.

004. Basic electronic components

1. Why are resistors used in a circuit?

2. What type of circuit component stores an electrical charge?

3. The time required for a capacitor to charge depends on what two things?

4. Explain mutual induction.

5. What is *normally* connected to the primary winding of a transformer to induce voltage into the secondary winding?

6. What type of transformer produces a *smaller* voltage at the secondary winding than the primary winding?

7. What two components utilize electromagnetic principles to perform *mechanical* actions for a circuit?

8. State two things that happen to a diode's depletion region when it is forward biased.

9. State the two basic purposes of a transistor.

10. When a transistor is forward biased, how does the current flow in relation to the arrow on the schematic diagram?

11. What electronic component is specifically designed to operate in the reverse bias mode?

12. What four advantages do integrated circuits have over conventional wired circuits of discrete components?

005. Electronic circuits

1. Use Ohm's Law to calculate the current of a basic series circuit if the resistance is 10 ohms and the voltage is 20 V.

2. How do you calculate the total resistance of a series circuit?

3. How do you calculate the total current of a parallel circuit?

4. List the three main properties of a parallel circuit.

5. What electrical malfunction is caused by a loss of resistance in a component?

6. Match the term in column B with the correct description in column A. Column B items may only be used once.

Column A	*Column B*
____ (1) Steps up or steps down the input line voltage and isolates the power supply from the power line.	a. Filter
____ (2) Converts the AC input signal to a pulsating DC.	b. Rectifier
____ (3) Converts pulsating DC to a purer, more desirable form of DC voltage.	c. Transformer
____ (4) Maintains the output of the power supply at a constant level in spite of large changes in load current or input line voltages.	d. Regulator

7. What is the primary purpose of an oscillator?

8. What type of oscillator generates complex waveforms to include square, trigger, and sawtooth waves?

9. What type of wave-shaping circuit prevents some part of a waveform from exceeding a specified value?

10. What is the simplest numbering system used in digital circuitry?

11. Convert the decimal number 12 to binary.

12. Convert the decimal number 13 to BCD.

13. Which logic gate requires *all* inputs to be HIGH in order for the output to be HIGH?

14. Which logic gate *only* outputs a HIGH when *all* inputs are LOW?

006. Other components and circuits

1. How does an SCR turn on?

2. Microwave tubes overcome what four problems so they can be used as high power, high frequency oscillators, and amplifiers?

3. What three types of amplifiers will you most likely encounter in electronic circuitry?

Answers to Self-Test Questions

001

1. (1) Coefficient.
   (2) Base.
   (3) Exponent.
2. 7.75×10^{15}.
3. Mega.
4. 1.9×10^{6}.
5. 1.9 megawatts.

002

1. The movement of electrons from one place to another.
2. Protons and neutrons.
3. When it contains the same number of positive charges in the nucleus as it has negative charges in its orbits.
4. The outer shell.
5. (1) Conductors; (2) Semiconductors; (3) Insulators.
6. The force or electrical energy required to move electrons from one place to another.
7. The movement of free electrons through a conductor.
8. Resistance.
9. Impedance.
10. W.

003

1. Any device through which an electrical current flows and which changes this electrical energy into a more useful form.
2. Schematic diagram.
3. Basic DC circuit.
4. AC circuit.
5. Magnetism.
6. Type of core and the amount of current in the coil.
7. A changing magnetic field produces voltage in a conductor. If a conductor lies in a magnetic field, and either the field or conductor moves, a voltage is induced in the conductor.
8. 60 hertz.

004

1. To control current flow in the circuit.
2. Capacitor.
3. Amount of resistance through which the charging current flows and the size of the capacitor.
4. The action in which a change of current in one coil (or circuit) induces a voltage into another coil (or circuit).
5. An AC signal.
6. Step down transformer.
7. Relays and solenoids.
8. Size of the depletion region will be reduced and its resistance will also decrease.
9. To perform as a switch or amplify a circuit.
10. Against the arrow.
11. Zener diode.
12. (1) Possible improvement in circuit performance; (2) Drastic reduction in size and weight; (3) Large increase in reliability; (4) Lower cost.

005

1. 2A.
2. The sum of all the individual resistances in the circuit.
3. The sum of the individual branch circuit current values.
4. (1) Total voltage is equal to each of the branch voltages; (2) Total current is the sum of each of the branch currents; (3) Total resistance is always smaller than the smallest branch resistance.
5. Short.
6. (1) c.
   (2) b.
   (3) a.
   (4) d.
7. Generate a given waveform at a constant peak amplitude and specific frequency and to maintain this waveform within certain limits of amplitude and frequency.
8. Non-sinusoidal.
9. Limiter.
10. Binary (or base 2) system.
11. 1100.
12. $0001\ 0011_{(BCD)}$.
13. AND gate.
14. NOR gate.

006

1. Applying a small positive potential to the gate terminal of the SCR forward biases the middle junction and turns the SCR on.
2. (1) RF radiation losses in external circuitry; (2) Inter-electrode capacitance; (3) Electron transit time; (4) Lead inductance.
3. (1) Common collector; (2) Common emitter; (3) Common base.

Complete the unit review exercises before going to the next unit.

Unit Review Exercises

Note to Student: Consider all choices carefully, select the *best* answer to each question, and *circle* the corresponding letter. When you have completed all unit review exercises, transfer your answers to the Field-Scoring Answer Sheet.

Do not return your answer sheet to the Air Force Career Development Academy (AFCDA).

1. (001) What scientific notation is the correct way to express the number 764,500?
   a. $.7645 \times 10^{-6}$.
   b. 7.645×10^{-5}.
   c. $.7645 \times 10^{6}$.
   d. 7.645×10^{5}.

2. (001) What metric prefix is used to describe the decimal number .001?
   a. Kilo.
   b. Giga.
   c. Milli.
   d. Micro.

3. (002) An atom becomes an ion by
   a. gaining or losing neutrons.
   b. gaining or losing electrons in it outer shell.
   c. having the same amount of neutrons as protons.
   d. having the same amount of protons as electrons.

4. (002) Which electrical term is measured in watts (W)?
   a. Power.
   b. Voltage (V).
   c. Capacitance.
   d. Inductive reactance.

5. (003) With the alternating current (AC) method, voltage forces electrons to flow
   a. through the path of most resistance.
   b. to the load and then are dissipated through electromagnetism.
   c. first in one direction, then in the opposite direction, alternating very quickly.
   d. continuously through the circuit, in one direction, back to the source and repeated until the path is interrupted.

6. (003) In 1819, Hans Christian Oersted discovered the strength of a magnetic field can be changed by varying what characteristic?
   a. Polarity of alternating current (AC) applied to the magnet.
   b. Polarity of direct current (DC) applied to the magnet.
   c. Adding an opposing pole to the magnet.
   d. Current through a conductor.

7. (003) If a conductor lies in a magnetic field, and either the field or conductor moves, a voltage is induced in the conductor. This effect is called
   a. electromagnetic conduction.
   b. electromagnetic induction.
   c. magnetic conduction.
   d. magnetic impedance.

8. (004) A resistor is used in a circuit to
   a. control current flow.
   b. provide continuity between two circuits.
   c. store energy in the form of a magnetic field.
   d. boost circuit voltage and current to a steady, usable level.

9. (004) A capacitor will oppose a change in
   a. current and store energy in a magnetic field.
   b. resistance and store energy in a magnetic field.
   c. current and store energy in an electrostatic field.
   d. voltage and store energy in an electrostatic field.

10. (004) The two basic purposes of a transistor are either to perform as a
    a. switch or amplify a circuit.
    b. capacitor or amplify a circuit.
    c. switch or perform as an electromagnetic conductor.
    d. capacitor or perform as an electromagnetic conductor.

11. (004) In a schematic diagram, how is current flow *always* portrayed on a transistor when it is forward biased?
    a. Away from the emitter-collector (E-C) junction.
    b. Towards the emitter-base (E-B) junction.
    c. Against the arrow.
    d. With the arrow.

12. (004) A Zener diode is specifically designed to operate in
    a. avalanche breakdown mode.
    b. thermal runaway mode.
    c. forward bias mode.
    d. reverse bias mode.

13. (004) An advantage of integrated circuits (IC) is that they
    a. are more reliable.
    b. are easily repaired.
    c. are larger in size and weight.
    d. help dissipate heat generated in other circuits.

14. (005) The number of pulses in the direct current (DC) output of a bridge rectifier is called the
    a. filter.
    b. regulator.
    c. filter frequency.
    d. ripple frequency.

15. (005) What power supply circuit senses changes in output voltages and compensates for the changes, usually within plus or minus (±) 0.1 percent?
    a. Regulator.
    b. Rectifier.
    c. Ripple.
    d. Filter.

16. (005) What wave-shaping circuit ties down the upper or lower extremity of a waveform to a fixed direct current (DC) potential?
    a. Cutoff.
    b. Limiter.
    c. Oscillator.
    d. Clamping.

17. (005) What is the binary equivalent of the decimal number 7?
    a. 100.
    b. 101.
    c. 111.
    d. 1011.

18. (005) What is the binary coded decimal (BCD) equivalent of the binary number 1011?
    a. B.
    b. 11.
    c. 0000 1011.
    d. 0001 0001.

19. (006) Which is *not* a conventional problem that microwave tubes overcome in order to be used in high power, high frequency oscillators and amplifiers?
    a. Lead inductance.
    b. Electron transit time.
    c. Inter-cathode resistance.
    d. Radio frequency (RF) radiation losses in external circuitry.

Please read the unit menu for unit 2 and continue ➔

Unit 2. Transmit and Receive Fundamentals

2–1. Communications Mediums 2–1
007. Transmission lines 2–1
008. Data bus 2–9
009. Waveguides 2–18
2−2. Modulation Principles and Techniques 2–33
010. Amplitude modulation 2–33
011. Frequency modulation 2–37
012. Phase modulation 2–45
013. Space modulation 2–48
2−3. Digital Communications 2–52
014. Pulse code modulation 2–53
015. Transmission methods 2–58
016. Bit count integrity 2–61
2–4. Light wave Communications 2–64
017. Fiber optics overview 2–65
018. Elements of fiber optic cables 2–67
019. Principles of light wave propagation 2–68
020. Factors that inhibit light propagation 2–72
021. Classifying optical fibers 2–75

INFORMATION-BEARING SIGNALS travel through a medium that separates the transmit equipment from the receive equipment. For radio and radar signals, the medium is an antenna that radiates the energy into the air. In some digital applications, the medium could be coaxial or fiber optic cable. For efficient transmission, whether we make a measurement in terms of bandwidth, power required, or complexity of circuits, we must process the information in some manner before transmitting it. We call this signal processing "modulation." In this unit, we cover communications mediums, modulation principles and techniques, digital communications, and optical communications through fiber.

2–1. Communications Mediums

Sending information between two locations requires various types of communications mediums. There are tiny signals in computer systems that travel only a few inches and there are long-haul communications that travel many miles, requiring much more equipment and power. This section will describe a few important communications mediums to include transmission lines, data buses, and waveguides.

007. Transmission lines

Most people think of transmission lines as nothing more than some sort of wire. While that is somewhat true, it is smart to give them a little more credit as they are an integral part of any communication system. The purpose of this lesson is to provide you with some principles of transmission lines and their use.

You may not realize it, but you are probably already familiar with transmission lines; the AC power cord on your stereo, the cable television wire, and your phone cord are all examples of transmission lines. Generally, we can define a transmission line as a conductor or series of conductors used to carry energy from a source to a load.

Identifying line loss

Figure 2–1 shows some common transmission lines that you may encounter during your career. For this lesson, we will call the electrical energy you want to carry RF energy. Although you strive for maximum energy transfer with minimum loss, some loss does occur. This loss is due to properties of the line. The following is a brief discussion of some of the different types of line loss.

Resistive (I^2R) loss

The ideal transmission line would be one that has no power loss. However, power loss due to resistance is present any time you use a conductor to transfer energy. You are accustomed to thinking of a piece of wire as being a "short," but, in fact, it is a very small resistance. There is some measure of resistance in any conductor. The power loss in a short line may be negligible. In lines of considerable length, however, the power loss due to resistance becomes a concern. You call this copper loss or I^2R loss.

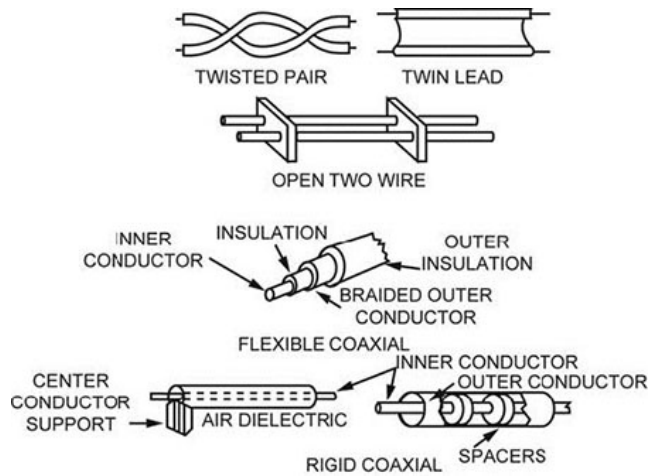

Figure 2–1. Transmission lines.

Skin-effect loss

Skin effect defines the tendency of high-frequency currents to flow near the outer surface of the conductor. The higher frequencies increase the change in magnetic flux surrounding each moving electron. This changing flux induces a counter-electromagnetic force (CEMF), which opposes electron flow. Electrons at the center of the conductor encounter the greatest opposition but flow more easily on the surface or skin of the wire. The increased opposition at the center of the conductor effectively reduces the conductor's cross-sectional area. Skin effect is directly proportional to frequency; the greater the frequency, the greater the CEMF and resulting skin-effect loss.

Increasing the diameter of the conductor (making more skin available) can reduce power loss due to skin effect. Another way to minimize skin-effect losses is to make the conductor hollow since the center of the conductor has high impedance. This saves material and reduces weight without appreciably affecting the resistance of the wire.

Remember that when you talk about "loss," what you are really talking about is conversion. By "conversion," we mean conversion from one form of energy to another. The electrical energy converts into heat that is dissipated by the line. It is possible for this heat to become so great that it melts the wire.

Radiation and induction loss

Current flow causes the expansion and collapse of electric and magnetic fields around transmission lines. When these fields escape from the line, radiation, and induction loss occurs.

Radiation and Induction Loss	
Type	**Description**
Radiation loss	Radiation loss occurs when the expanding lines of flux leave the conductor and fail to return. That energy radiates into space as the transmission line acts like a transmitting antenna. Using shielded conductors minimize radiation loss. Shielding is a metal housing around the conductor(s). Shielding also prevents external signals from being added into the transmission line, which could cause interference.

Radiation and Induction Loss	
Type	**Description**
Induction loss	Induction loss occurs when expanding lines of flux around the conductor induce a voltage and current into nearby conductors. The expanding lines of flux can “cut” into and dissipate power into these neighboring wires. This power is seen as a loss. Using standoff insulators (to separate conductors) and shielding can minimize induction loss.

Capacitive loss

Insulation in a two-wire transmission line also serves as a dielectric for the capacitance of the line. As the capacitor charges and discharges, orbits of electrons in the dielectric material are constantly changing. This causes some of the electromagnetic energy to convert into heat energy. The heat generated by this process is then dissipated and is a loss. This type of energy loss, which you call dielectric loss, appears as a resistive loss to the power source. Dielectric loss is proportionate to frequency. Transmission lines with air dielectrics have a very low dielectric loss when compared to those using a polyethylene plastic material.

Leakage loss

Because no insulation is perfect, some electrons move through the dielectric as leakage current. Leakage loss is held to a minimum by using very high resistance dielectric materials. Loss caused by leakage generates heat that, to the power source, is another resistive loss. Some ceramics and mica have a higher resistance; thus, they have less leakage loss than air.

Coaxial cables

Two common transmission lines you will likely encounter are both coaxial cables; flexible and rigid coaxial cable.

Flexible coaxial

The flexible coaxial cable consists of an inner conductor of solid or stranded wire and an outer concentric conductor of braided wires. The conductors are separated from each other by polyethylene plastic or a similar insulating material. This type of line is capable of transferring high power at high frequencies, with minimum loss. The major power loss is due to the dielectric and skin effect. Flexible coaxial cable is commonly used in radio communications sets, televisions, microwave radios, and radars.

Rigid coaxial

A rigid coaxial cable transmission line consists of a center conductor placed inside a rigid metal tube that functions as the outer shield. One type has the center conductor fixed along the central axis of the outer tube by disk-shaped spacers. The insulating disks are polyethylene plastic or similar type of material. Another type of rigid coaxial cable is constructed with an air dielectric. Metallic insulators, which are quarter-wave sections of coaxial line, support the center conductor. The line has space inside with pressure to eliminate moisture. Quarter-wave metallic insulators make this line useful only at the designed frequency. You may however, see small lengths used in constructing internal RF connections for radios. Rigid coaxial cable transmission line is primarily for high power at frequencies up to 3 gigahertz (GHz). This type line has very little radiation loss because the energy is confined between the two conductors. The major power loss is due to copper-resistive loss.

Electrical characteristics

You can describe a transmission line in terms of its impedance. Impedance is the opposition to alternating current.

The ratio of voltage (E) to current (I) at the input end of a transmission line (E in/I in) is known as the input impedance. This is the impedance presented to the transmitter by the transmission line and its

load, the antenna. The ratio of voltage to current at the output end (E out/I out) is known as the output impedance. This is the impedance presented to the load by the transmission line and its source. If you could use an infinitely long transmission line, the ratio of voltage to current at any point on that transmission line would be some particular value of impedance. This impedance is known as the characteristic impedance (Z_O).

The Z_O of a transmission line is due to its inductance and capacitance. Exactly how much inductance and capacitance a line has depends upon its construction. The size of the conductors, the space between them, plus the dielectric material used, determines the amount of capacitance. These inductance and capacitance values are present in all transmission lines and affect the signal applied to the line.

Figure 2–2 shows the Z_O development in a transmission line. A battery, switch, and ammeter connect to an infinitely long line, with its series inductance and shunt capacitance. When the switch is closed and the direct current (DC) voltage applies to the line, current flows and a field builds up around a unit section of inductance (L1); the unit section of distributed capacitance (C1) then begins to charge. As C1 approaches a full charge, C2 begins to charge through L2 and the current through ammeter "A" remains constant. Current continues to flow through the inductance to charge the capacitance on down the line. Since the line is infinitely long, there is always capacitance to be charged and current continues flowing into the line. Therefore, the line has the same effect on the battery as a fixed resistance of a specific value. Since Z_O of a line is determined by the series inductance and shunt capacitance of the line, the value of Z_O does not change whether you lengthen or shorten the line. You can calculate the characteristic impedance of a transmission line using the formula:

$$Z_0 = \sqrt{\frac{L}{C}}$$

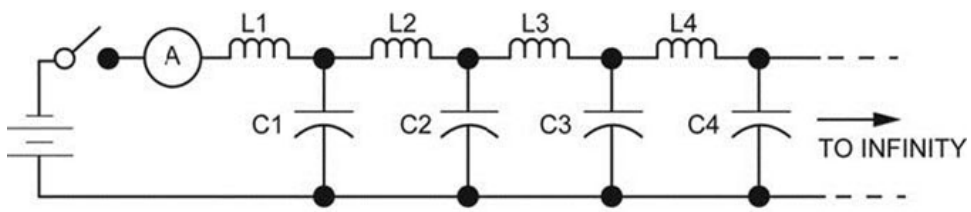

Figure 2–2. Development of characteristic impedance.

Cutoff frequency

Cutoff frequency is the highest frequency that passes down the line. Each line has series inductance and shunt capacitance which changes in value if the signal frequency is changed. If you apply a signal at some frequency to the line, then you have some value of inductive reactance (X_L) and capacitive reactance (X_C) produced. Remember from earlier lessons that an increase in frequency causes an increase in X_L and a decrease in X_C. You may have noticed this is essentially a description of a low-pass filter.

Refer to the transmission line of theoretically infinite length in figure 2–3. Visualize the signal as moving from left (generator) to the right (load). If the value of X_L is small and X_C is large, then the signal in fact moves from source to load. If the value of X_L is large and X_C is small, then the signal is developed across the series inductance and shunted across the line by the capacitance and does not pass along the line. The frequency at which this occurs is the cutoff frequency.

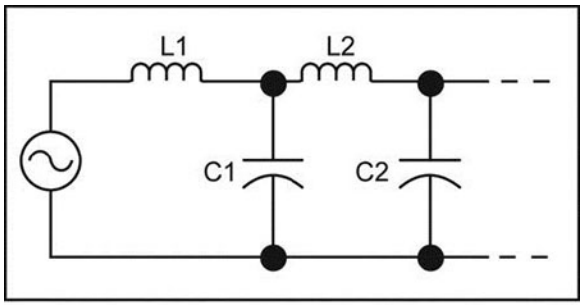

Figure 2–3. Transmission line of theoretically infinite length.

Wavelength

You use the Greek letter "lambda" (λ) to signify wavelength—particularly in a formula. The formula you use to determine wavelength of an RF signal is as follows:

$$\lambda = \frac{300}{\text{Frequency in MHz}}$$

A very important term to understand when studying transmission lines and antennas is wavelength. One wavelength is the distance in space occupied by one cycle of a radio wave at any given instant. If you freeze the wave (a full cycle) in place and measure it, the wavelength would be the distance from the leading edge of one cycle to the corresponding point on the next cycle. Wavelengths vary from a few hundredths of an inch at extremely high frequencies to many miles at extremely low frequencies. Common practice is to express wavelengths in meters, so you of course, do that here.

$\lambda = \frac{300}{\text{Frequency in MHz}}$The number 300 represents the speed of light in millions of meters per second;

remember that light, like RF, is an energy wave. As the frequency changes, in the formula above, the wavelength also changes. Wavelength varies inversely with frequency–the higher the frequency, the shorter the wavelength (as you recall, higher frequencies complete their alternations more quickly). Have you ever noticed how much shorter the antenna is on a cellular phone when compared to a citizen's band (CB) radio? This is because the phone's frequency is in the 800 – 900 megahertz (MHz) range, while the CB radio has a frequency in the neighborhood of 27 MHz. You will notice throughout your career that very high frequency (VHF) antennas are generally larger than their ultrahigh frequency (UHF) counterparts.

Electrical length

You can measure transmission lines in terms of their physical length and their electrical length. Physical length is self-explanatory (just measure the line); electrical length, however, requires some explanation.

Electrical length is a comparison of physical length and wavelength. You express electrical length in the number of wavelengths. Each complete cycle = 1 wavelength; two complete cycles = 2 wavelengths, and so on. Figure 2–4 shows a transmission line with a physical length of 10 meters.

The applied frequency is 150 MHz. Using the formula from above; the wavelength of this signal is 2 meters:

$$\lambda = \frac{300}{150} = 2 \text{ meters}$$

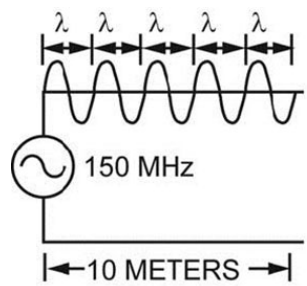

Figure 2–4. Physical vs electrical length.

$$\lambda = \frac{300}{150} = 2 \text{ meters}$$

You determine this transmission line's electrical length as follows:

$$\text{Electrical length (in } \lambda) = \frac{\text{Physical length}}{\lambda}$$

$$\text{Electrical length} = \frac{10 \text{ meters}}{2 \text{ meters}}$$

Electrical length = 5 wavelengths (5λ)

Frequency's effect on wavelength

Since wavelength inversely relates to frequency, the electrical length changes with frequency. If you change the frequency in figure 2–4 to 15 MHz, the line becomes a $\lambda/2$ ($1/2$ wavelength) transmission line:

$$\text{Wavelength } (\lambda) = \frac{300}{15} = 20 \text{ meters}$$

$$\text{Electrical length} = \frac{10}{20} = .5\lambda \text{ or } \frac{\lambda}{2}$$

This line, with a physical length of 10 meters, has an electrical length of 5 wavelengths at 150 MHz and an electrical length of $\lambda/2$ at 15 MHz.

This demonstrates that if a transmission line's physical length remains constant and the frequency increases, the electrical length increases. Vice versa, as frequency decreases on a given transmission line, electrical length decreases.

Transmission line terminations

The load for a transmission line may be any device dissipating or using RF power. If the line is used for transmitting purposes, the load is ordinarily an antenna. If the line is used for a receiver, the receiver's input circuitry is the load. The receiver and antenna are the terminations for the line. Whatever the application, the conditions existing at the load determine the standing wave ratio (SWR).

Nonresonant and resonant lines

A nonresonant transmission line is a transmission line having no reflected waves. An infinitely long line would be a nonresonant transmission line. The theory is if a transmission line is infinitely long, the energy never reaches the load end, and thus there is never any reflected energy. If a transmission line terminates in a load that possesses the same impedance as the line's characteristic impedance, the load resistance absorbs all the energy transferred down the line. Therefore, any transmission line terminated as such acts as an infinitely long transmission line. This line has no reflected voltage, induces maximum power transfer, and you term it a nonresonant line.

The voltage and current waves are in phase as they move from the source to the load. These waves are called incident, or forward, waves. Figure 2–5A shows a nonresonant transmission line. Since the load absorbs all the energy, none reflects back toward the source. Thus, you often refer to nonresonant lines as "flat lines."

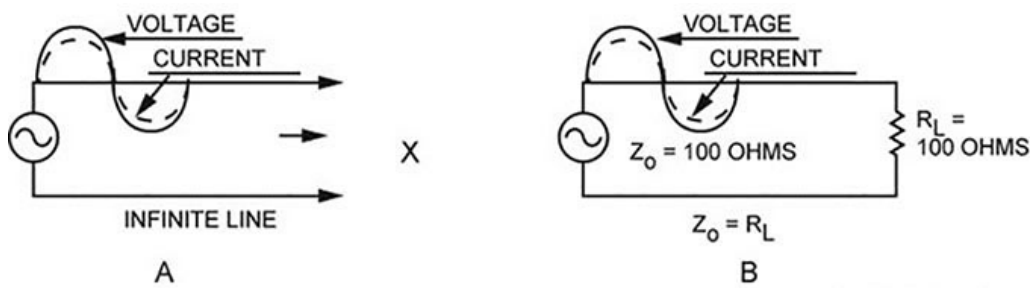

Figure 2–5. Nonresonant and resonant transmission lines.

Figure 2–5B shows a resonant transmission line; a transmission line that does in fact have reflected waves. When the impedance of the load differs from the Z_o of the line, the impedance is mismatched. Whenever there is a mismatch of impedance between the line and load, part of the energy reflects back toward the source. The greater the impedance mismatch, the higher the amount of reflected energy.

Standing waves

The term standing wave is one you will likely hear many times throughout your career. Recall that a perfect impedance match results in no reflected power. However, if the impedance is mismatched, the circuit has reflected power. At any point along a mismatched transmission line, there exists a voltage equal to the vector sum of the forward and reflected signals. This voltage appears as a constant (standing) wave at that point in the line. If you could measure only the forward or reflected wave by itself, the voltage would be constant throughout the length of the line. The amplitude of the waveform (the vector sum) is not constant because the two signals that are combining are out of phase. In a perfect impedance match, the voltage would measure the same at all points along the line. If you measure the maximum voltage found along the line and compare it to the minimum voltage, you have a ratio. You call this ratio the voltage standing wave ratio (VSWR).

$$VSWR = \frac{E\ max}{E\ min}$$

VSWR expresses as a ratio and customarily as a ratio to "1." The results can never be smaller than 1:1, so .5:1 is impossible. The ratio is 1:1 if, and only if, voltage is constant, which indicates the impedance matches. At a VSWR of 2:1, approximately 10 percent of the power reflects back to the source.

A high VSWR not only causes communications to fail, it can also damage the equipment or transmission line. The higher the VSWR, the poorer the impedance match and the more likely damage could occur.

If a line has no standing waves, termination for that line is correct and maximum power transfer takes place. If a mismatch of impedance produces standing waves due to reflected energy, the load does not use some of the source energy. Therefore, standing waves represent a loss in power and are undesirable on a transmission line. It is very important that a transmission line have a Z_O equal to the impedance of the equipment to which it is connected. If your receiver has a 50-Ω RF input, connect it to the antenna using a 50-Ω transmission line (such as RG–58 cable). Not doing so leads to standing waves.

Terminating the line

Any type of impedance termination other than Z_O causes reflected waves to occur on the lines. Regardless of the termination type, if there is reflected energy on the line, the line is resonant. The reflected energy represents a loss in signal energy.

Open termination

On a transmission line with an open termination, the wave reflects back to the source and there is significant signal loss. If you use an AC meter to measure voltage and current along this line, you could plot all the readings along the length of the line and the result would be as shown in figure 2–6. Observe that voltage is at maximum across the open and current is at minimum. This should make sense because as you know voltage is always maximum and current at minimum across an open. Notice that the two voltage waves are in phase and maximum at the open termination. With an open termination, voltage reflects in phase and current is reflected 180 degrees out of phase with the incident wave.

NOTE: For simplification purposes, the figure is without the negative alternations of the sine waves.

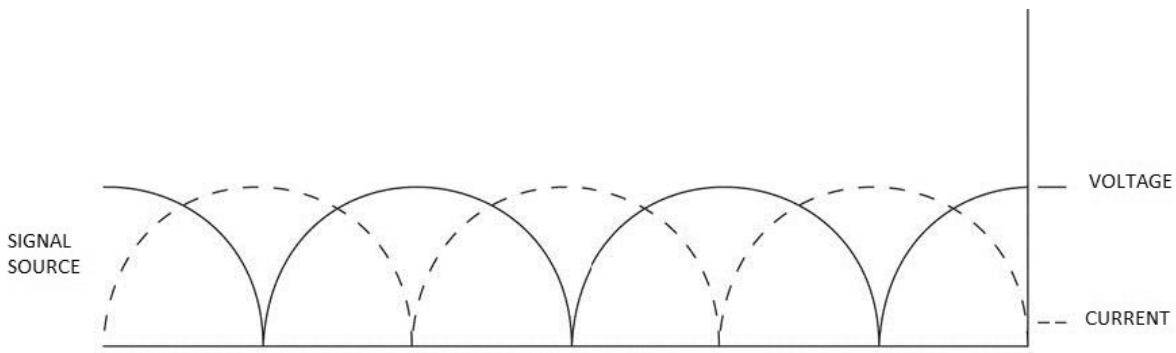

Figure 2–6. Reflected waves from an open termination.

Shorted termination

A line terminated in a short also causes reflections. You can take an AC meter again, plot the readings as before, and show the results in figure 2–7. With a shorted termination, voltage is reflected 180 degrees out of phase and current reflects in phase with the incident wave. Notice at the shorted termination that the standing wave of current is at maximum and the standing wave of voltage is at minimum. Again, the earlier lesson about voltage and current hold true as current is at maximum and voltage is at minimum across a short.

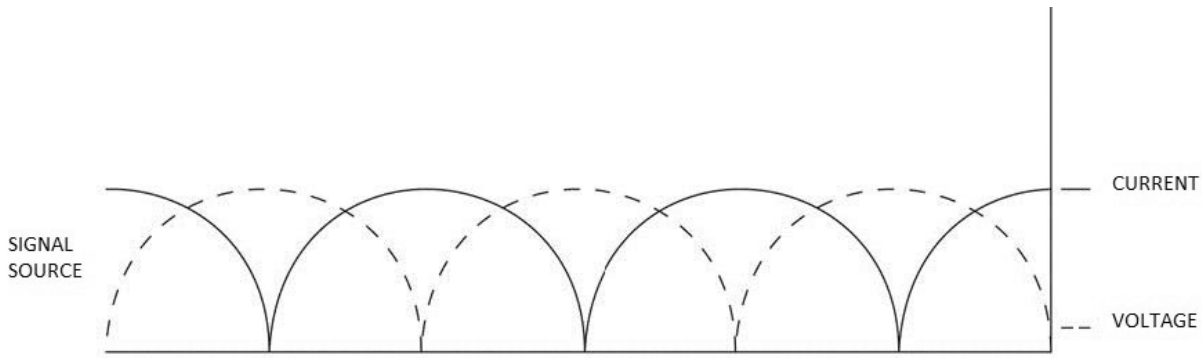

Figure 2–7. Reflected waves from a shorted termination.

Various terminations

What happens if the load resistance is other than a short or open, yet smaller or larger than the Zo of the line? You know this causes reflected waves, as an impedance mismatch exists. If the load impedance is greater than that of the line, the voltage and current at termination have the same characteristics as they did when the line terminates into an open. If the load impedance is less than the line impedance, the voltage and current at termination have the same characteristics as they did when the line terminates into a short.

Baluns

Only in a few special cases is the load naturally or inherently of the proper impedance to perfectly match a practical transmission line. In most cases, it is necessary to use a mismatch that produces an acceptable VSWR or to take steps to bring about a proper match between the line and load. Devices used to impedance match a transmission line to an antenna exist in many forms. One such device is a balun.

Baluns are used to match the impedance of coaxial cable to an antenna. The name "balun" comes from one of the device's purpose; matching BALanced to UNbalanced circuits. Even though they often do not look like transformers, baluns function as transformers. They are often made up of sections or coils of coaxial cable. RG–213 cable has a characteristic impedance of 52 Ωs. If it connects directly to an antenna that has an impedance of 600 Ωs, large losses would exist. A balun provides a smooth transfer of RF between the low-impedance coax and the high-impedance antenna with only a small loss of power.

008. Data bus

Due to today's technology development, most modern day transmitters are digital. To send signals from the set control to the transmitter, a "digital highway" is necessary. This digital highway is called a data bus. If an operator dials in a frequency on the set control, that frequency must be sent digitally to a microprocessor to control oscillator and frequency multiplier tuning. This digital frequency information goes to the transmitter's processor via the data bus.

There are many types of data buses in use throughout the military today. They are used inside individual equipment, but also provide a way to link multiple systems together. Later in this chapter, we are going to cover some of the different data bus types and how data is constructed to flow.

Speed is an important aspect of data transmission and it is important to define what that is before proceeding any further. In today's digital world, data is constructed of 1s and 0s. These 1s and 0s are called bits. The rate of which we send digital data is called the signal rate. The basic unit of measurement for signal rate is in "bits per second." Another common way to measure data rate is baud rate. When baud rate was first established, it was used interchangeably with signal rate. However, as technology advanced, so did the definition of baud rate. Baud rate is measured in symbols per second. Each symbol can represent several bits, so to find the signal rate you must

multiply the baud rate by how many bits are represented by each symbol. It is important to understand the difference between these two terms as both are frequently used when discussing data transmissions.

Another common term you should know is bandwidth. Bandwidth has several definitions depending on what you are talking about. When talking about digital communication bandwidth refers to the range of frequencies used to transmit data. The wider the range of frequencies the more data can be transferred at one time. Do not confuse bandwidth and signal rate. An easy way to think about it is to think about plumbing. Water moves through a pipe, the larger the diameter of the pipe the more water you can transfer at one time. The diameter of the pipe is like the bandwidth of signal. The faster the water is moving through the pipe is like the signal rate.

Reliable and timely transfer of data between communications systems is a necessity in today's Air Force. Modern communication systems operate in a digital environment giving more modular, flexible, and reliable equipment. A lot of work has gone into exploring new techniques for the transmission of information in today's systems. The old way of transferring info while still maintaining security is no longer possible. Information must be sent quicker to keep up with today's demands. There are several data bus standards found throughout the Air Force today. The most common data bus standards are Military Standard (MIL-STD)-1553, Recommended Standard (RS)-232, and general purpose interface bus (GPIB).

MIL-STD-1553

MIL-STD-1553 originated around 1972 and was specifically developed for military avionics applications. It is now a very successful standard, used on nearly all new and upgrade programs in space, fixed wing, and rotary wing military applications.

The 1553 data bus operates bidirectional, and each unit on the bus can communicate with all the others. Up to 32 users (data terminals) can be connected to the bus with data transmitted serially at 1 Megabit per second, or 1 MHz, in words of 20 bits. Normal system design involves dual redundancy. This is when the complete cable and coupling assembly is duplicated so that if a failure appears in the primary assembly, there is a secondary for back-up.

Transmission on the bus is managed through a "command response" rule, where all communications are controlled exclusively by a master control, termed the bus controller (BC). Other terminals are called remote terminals (RMT) or data terminal equipment (DTE). Various message formats are supported (BC to RMT, RMT to BC, and RMT to RMT, along with broadcast-type transmissions where one user can communicate with other users).

Operation of the 1553 data bus

To explain the operation of the 1553 data bus, we will use a basic amplitude modulation (AM) communication radio. Control of the AM radio components is provided through the MIL-STD-1553B (1553) dual redundant data bus, which is connected between all AM control panels, the AM display, and six AM modulator/demodulators (modems). The AM modems are digital devices that allow communication between an AM radio and other radios, or even other communication systems. Refer to figure 2–8 to show these system parts. Dual redundancy means that the 1553 data bus consists of an "A" and "B" bus. Each bus is equal and can perform identical functions. The A bus serves as the primary and the B bus serves as the secondary, or backup bus. Normally the A bus performs all functions until it encounters a fault. At that point, the B bus will automatically take over as the primary until the A bus malfunction is repaired.

The 1553 data bus operates under a command response bus protocol, in which there is a BC and RMT. Although any of the three AM controls can function as the BC, only one does so at a time. In normal operation, the RO-1 (fig. 2–8) AM control is the BC.

However, the RO-2 and Airborne Performance Monitor AM controls can also be selected as the BC. All units, with the exception of the active BC, serve as RMTs although they cannot communicate on the data bus until told to do so by the BC.

During routine operations, the BC will poll each RMT, checking for a change in status. If the RMT does not have a change in status, it responds to the BC with the appropriate message. If the RMT reports a change in status, the BC flags it for action and continues polling the other RMTs. When the BC comes back to the RMT with the change in status, it commands the RMT to report its information. A change in status can be either a configuration change that needs to be made or a fault detected by the RMT. If a status fault is detected, the offending unit is removed from the bus until the problem is fixed. When an AM control is acting as a RMT and an operator changes the configuration of the AM control, it will identify the change on the 1553 data bus as a change in status.

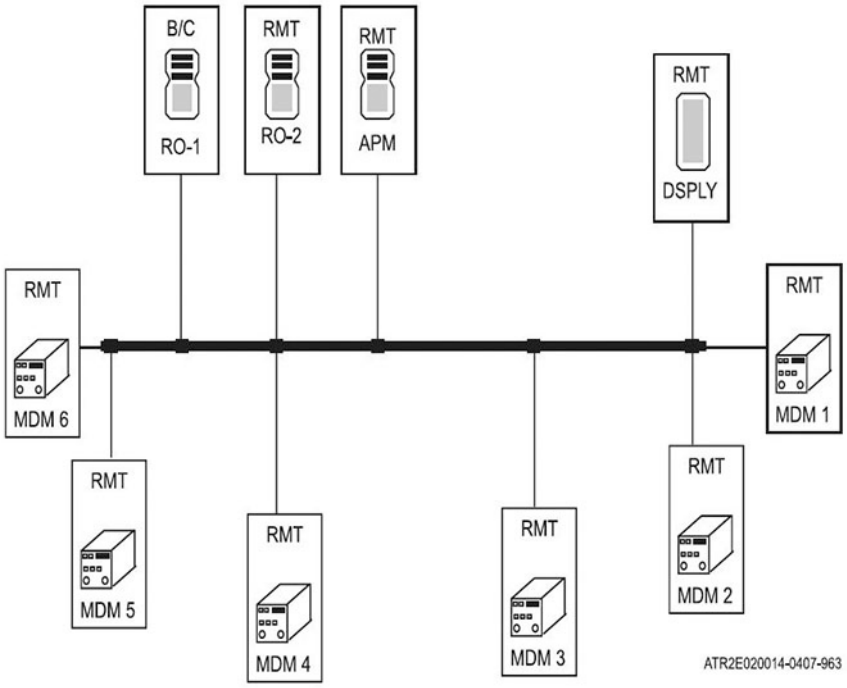

Figure 2–8. Typical 1553 configuration (only A bus shown).

Having a BC that continuously polls all radio components in Air Force systems provides a great advantage. It allows an operator, or troubleshooter, to know the status of the equipment and what is malfunctioning should a problem arise.

Communications on the 1553 data bus are comprised of three different types of instruction words: *command*, *data*, and *status*. Each of the three words consists of 16 bits of information, 3 bits for synchronization, and 1 bit for parity (odd), making a total of 20 bits. Refer to figure 2–9 for a simplified diagram of data flow between the BC and remote units. Notice that only the BC generates the command words. The RMTs, also called data terminals, generate both data and status words. Also, notice that the BC does not generate any status words.

Odd parity is used in order to make sure data words are valid. Examining the word and adding up all of the ones gives either an odd or even number. If the number is odd then the parity bit would be a 0 maintaining that odd number. If the number of ones adds to an even number, then a parity bit of 1 is needed to maintain odd parity.

Command, data, and status words

The command word is the word generated by the BC. It is a digitally generated word sent to remote units in order to issue a “command.” This command tells each radio component whether to transmit,

receive, or submit a change in status. Data words provide information as commanded by the BC. Status words are to transfer status information from the RMTs to the BC. The status word indicates if the command word failed a validity test, indicates service needs of a RMT, indicates that the RMT is busy, indicates a fault, and even indicates data errors.

Building a 1553 data word

To aid in understanding 1553 information flow it is important to see how the various components explained earlier communicate with each other. For an illustration, refer to figure 2–10.

Now that we have a basic idea of how to create words and how the words flow through the AM system, let's build a basic data word. To accomplish this objective, refer to figure 2–11.

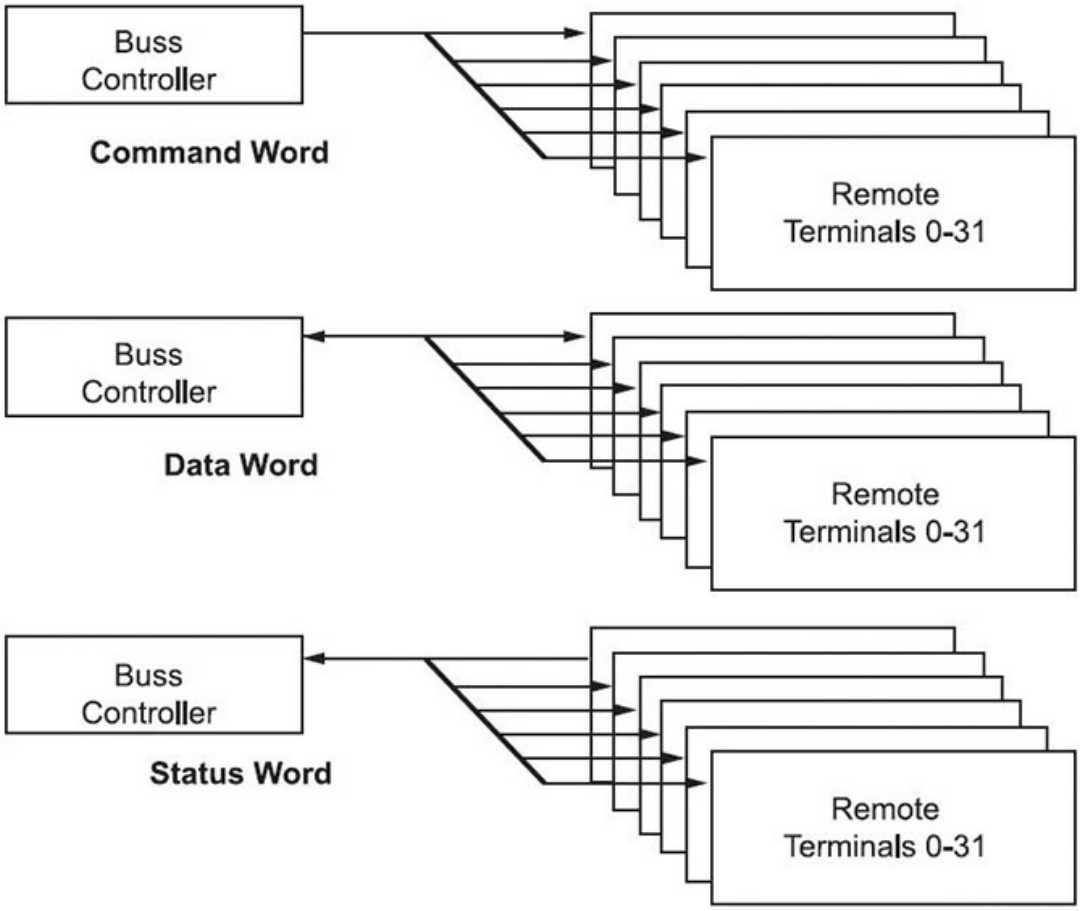

Figure 2–9. 1553 data flow.

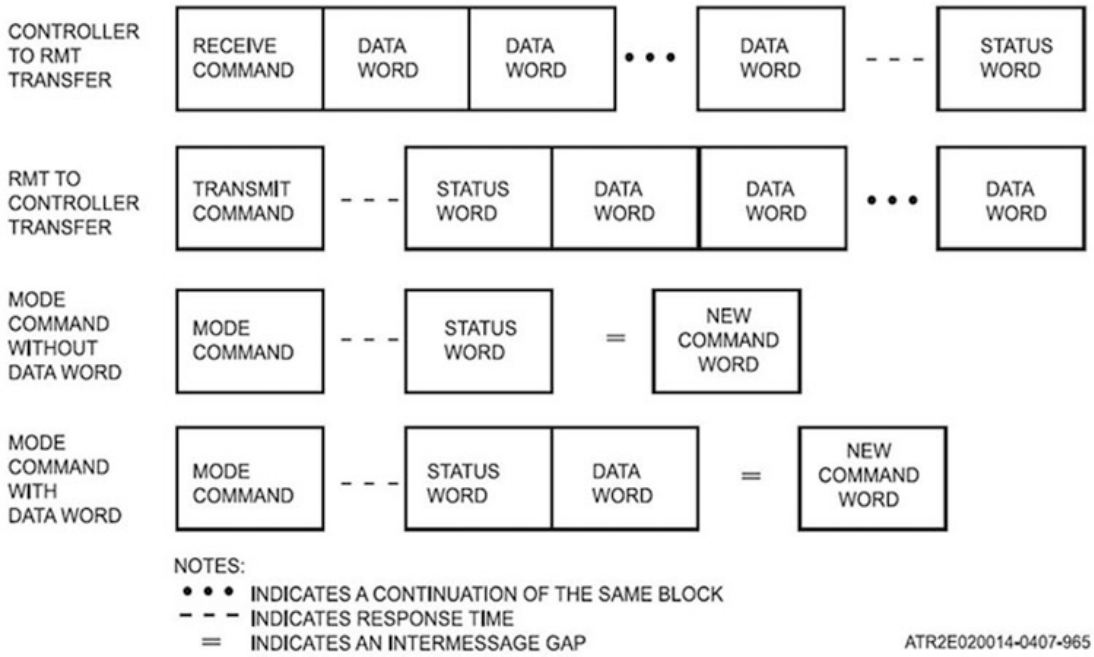

Figure 2–10. Word transfer format.

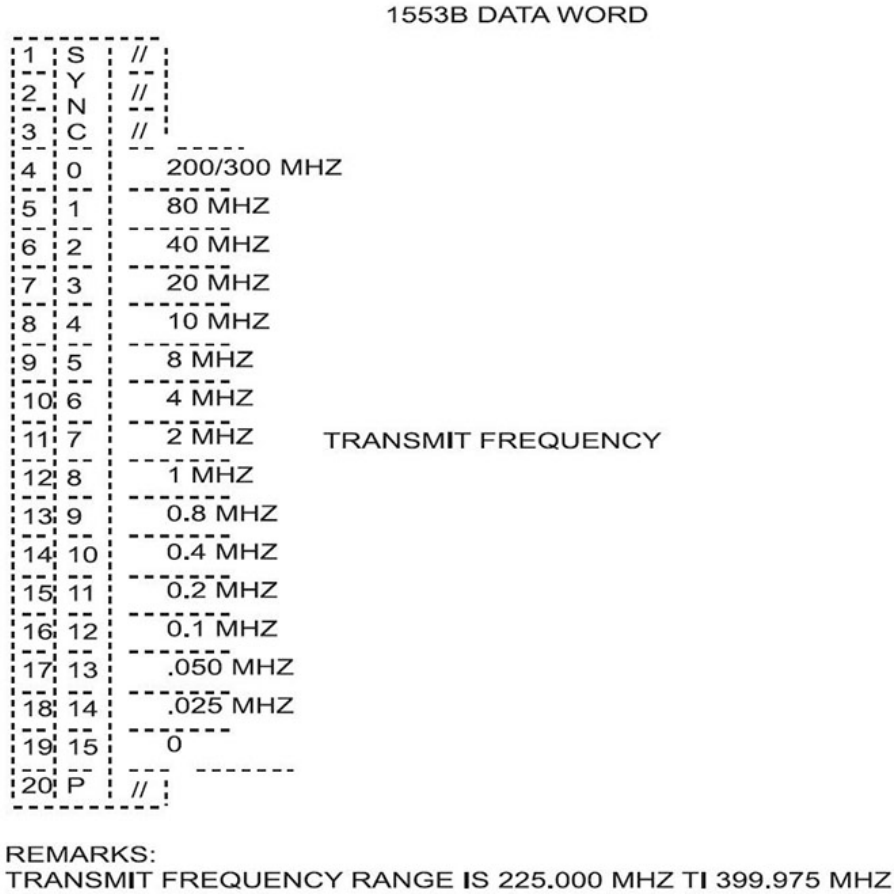

Figure 2–11. Data word.

Let us use a frequency of 325.750 MHz. To begin, the first three bits are sync bits and are developed by the system for synchronization purposes. The operator has no control over sync bit creation. That leaves 17 bits for creation. Notice that bit 4 has 200/300 MHz written by it. This means that a zero needs to be used for 200 and a 1 used for 300 Mhz. Since the given frequency is 325.750 MHz, a 1 would be used. Bits 5 – 8 are used to determine the value in the tens position of the dialed in frequency. In this case, it is a 2 (for 20 MHz), so the bits picked would be 0010. Note that to select one of these frequencies a 1 is used. Next, bits 9 – 12 determine the ones place in the frequency. Again, a 5 was selected (325.750 MHz), so the bits would be 0101, which is a 4 + 1 = 5. Next, bits 13 through 16 are there to determine the tenths digit. Since .750 was given, the bits would read 0111, which is .4 + .2 + .1 = .7. Bits 13 and 14 are there to determine decimal value after the tenths digit. Since .750 was given, bit 17 is a 1 and 18 is a 0. Bit 19 is not used and is always a 0. Finally, the parity bit must be set to odd parity. At this point, count the number of 1s in the new data word and make sure they all add up to an odd number. The current word is 1001001010111100. Counting the number of 1s gives a total of 8. Therefore, the parity bit now has to be a 1 (to maintain odd parity). The newly complete data word is _ _ _ (sync) 10010010101111001.

Recommended Standard 232

In order to make equipment from different manufacturers compatible, various interface standards (data buses) have been designed. One of the most widely used is the RS-232 data bus standard. It was originally designed to specify connections between terminals and modems. As modern communications systems and test equipment contain terminals and modems, there has to be a data bus that will interface with today's computing equipment. The following information is intended to explain, in relatively simple terms, the details of the RS-232 standard.

This guide is necessary due to the casual way that vendors implement "RS-232" interfaces, sometimes omitting required signals, requiring optional ones, or worse, implementing signals incorrectly. Due to this, and a lack of readily available information about the real Electronic Industries Alliance (EIA) standard, there is often considerable confusion involved in trying to interface two RS-232 devices.

Information

RS-232C is the most recent version of the EIA standard for low speed serial data communication. It defines a number of parameters concerning voltage levels, loading characteristics, and timing relationships. The actual connectors that are almost universally used (DB-25, sometimes called "EIA connectors") are recommended, but not mandatory. Typical practice requires mounting the female (DB-25) connector on the chassis of communication equipment, and male (DB-25) connectors on the cable connecting two such devices. Also widely used are the DB-9 connectors where only 9 of the 25 lines are available for use. DB-25 is a 25-pin type of connector and DB-9 is a 9-pin connector.

Typically, RS-232 only interfaces a computer to a modem, as opposed to one computer to another computer, or one modem to another modem. There are ways to go from computer-to-computer or from modem-to-modem, but this requires nonstandard cables. We use computers and modems throughout the armed forces to control almost all advanced electronic equipment. The modem is just a way to transfer a signal from a computer (controller) to other devices. The RS-232 interface is intended for relatively short distances (50 feet or less), relatively low speed (19,200 bits per second or less), and serial data transfers communication.

As digital signals are used, a very wide bandwidth channel is required. A limited bandwidth channel (such as a phone circuit) would cause severe and unacceptable distortion and consequent loss of information.

RS-232 will support simplex, half-duplex, or full-duplex type channels. In a simplex channel, data will only be traveling in one direction. An example might be a "receive only" printer. In a half-duplex channel, data may travel in either direction, but at any given time, the data will only be traveling in one direction, and the line must be "turned around" before data can travel in the other direction. An

example might be a walkie-talkie. In a full-duplex channel, data may travel in both directions simultaneously. Specific lines like “hand-shaking” lines are used to resolve problems associated with these channels, such as which direction data may travel at any given instant. If one of the devices involved in an RS-232 interface is a real modem (especially a half-duplex modem), “handshaking” lines must be supported, and the timing relationships between them are quite important. In certain cases, these lines may be used to allow one device (which is receiving data at a higher rate than it is capable of processing indefinitely) to cause the other device to pause while the first one catches up. This use of the hand-shaking lines was not really intended by the designers of the RS-232 standard, but it is a useful by-product of the way such interfaces are typically implemented.

Much of the RS-232 standard is concerned with support of modems. As briefly explained earlier, these devices convert a serial digital data signal into an analog (audio) signal and back into serial digital data on the other end. The first process is called MOdulation, and the second process is called DEModulation, hence the name MODEM. These devices are useful because they allow a computer or computer system to communicate with other computers or computer systems.

Standard circuits and definitions

For the purposes of the RS-232 standard, a “circuit” is defined to be a continuous wire from one device to the other. There are 25 wires with voltage signals called “discretes,” where a voltage is present or not present, that determine the operation in the full RS-232 specifications (fig. 2–12). Less than half of the signals are likely to be found in a given interface. In the simplest case, a full-duplex interface may be implemented with as few as three circuits. These three circuits are pin 2 (data from computer to modem), pin 3 (data from modem to computer), and pin 7 (signal ground).

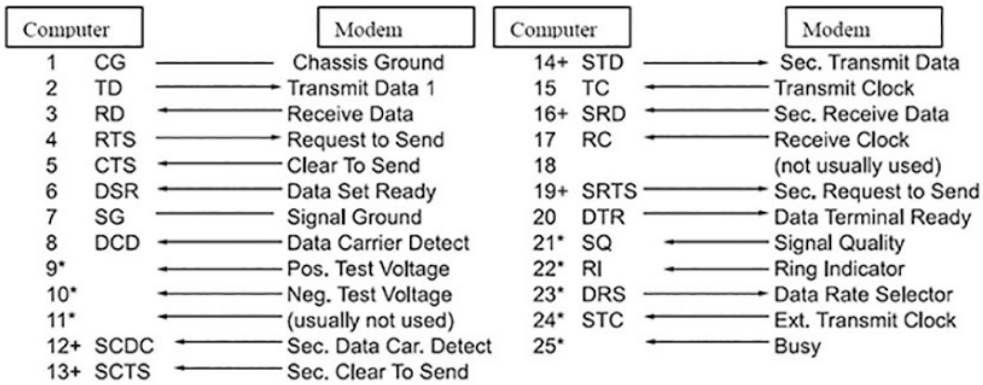

Figure 2–12. Standard circuit connections.

In figure 2–12 above, the character following the pin number means: * rarely used, + used only if secondary channel implemented is used only on synchronous interfaces. The direction of the arrow indicates which end (computer or modem) originates each signal, except for the ground lines (---). The computer is on the left (noted with pin numbers) and the signals on the right are the modem. For example, circuit 2 transmit data (TD) is originated by the (computer), and received by the (modem). It is important to note that the computer’s output is the modem’s input.

Electrical characteristics or each circuit

A definition of the most common circuits is presented to help give a better understanding of the RS-232 interface. Use both figure 2–12 and figure 2–13 to gain a better understanding of each interface. This text will only cover those signals that are necessary for all RS-232 applications. The signals not with an * or a + sign will not be covered.

1 Chassis Ground (CG)

This circuit (also called Frame Ground) is a mechanism to insure that the chassis of the two devices are at the same potential to prevent electrical shock to the operator. This circuit is optional.

2 Transmit Data (TD)

This circuit is the path where serial data is sent from the computer to the modem. This circuit is utilized anytime data is to travel in that direction. Data leaving the computer is called transmit (TX) data, this same signal arriving at the modem is called receive (RX) data.

3 Receive Data (RD) Data Set Ready

This circuit is the path where serial data is sent from the modem to the computer. This circuit is utilized anytime data is to travel in that direction. Data leaving the modem is TX data; this same signal is RD as referenced to the computer.

4 Request to Send (RTS)

This circuit is the signal that indicates that the computer wishes to send data to the modem (note that no such line is available for the opposite direction, hence the computer must always be ready to accept data). In normal operation, the RTS line will be OFF (logic 1 / MARK). Once the computer has determined that the channel is not busy, it will set RTS to ON (logic 0 / SPACE), and await an ON condition on clear to send (CTS) from the modem, at which time it may then begin sending. Once the computer is through sending, it will reset RTS to OFF (logic 1 / MARK). On a full-duplex or simplex channel, this signal maybe set to ON once at initialization and left in that state. Note that some modems must have an incoming RTS in order to transmit (although this is not strictly according to the standard).

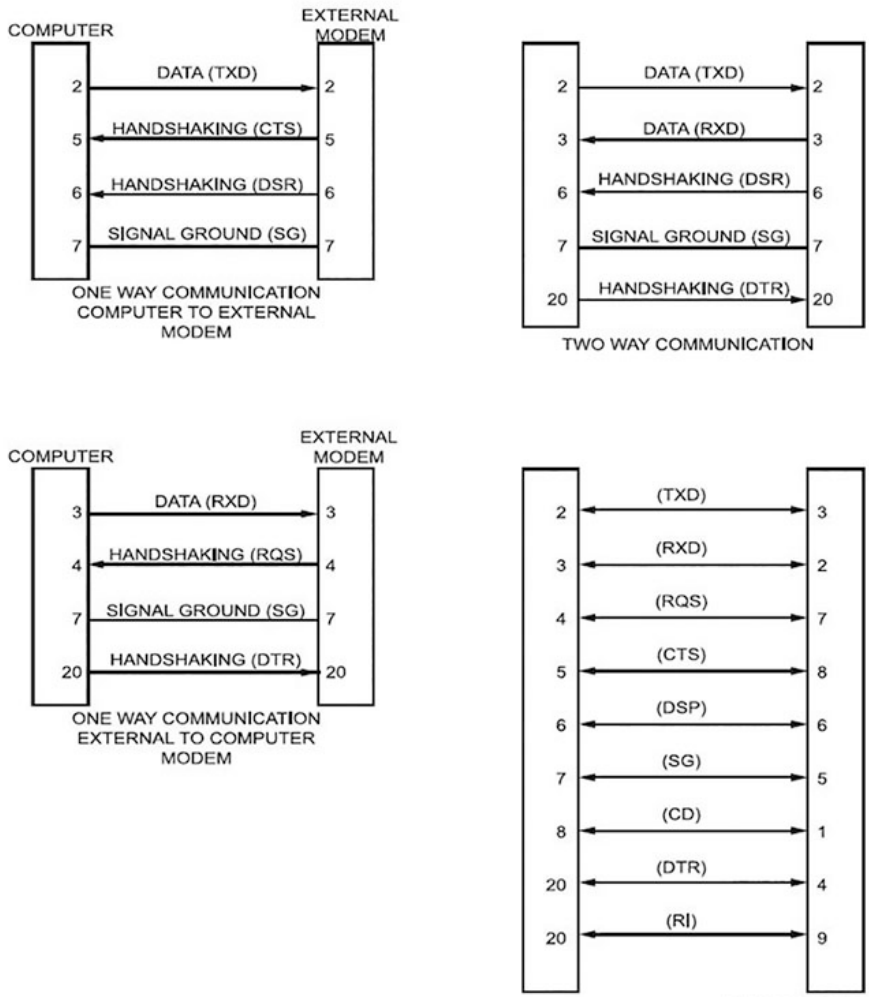

Figure 2–13. RS-232 interface connections.

5 Clear to Send (CTS)

This circuit is the signal that indicates that the modem is in operation. The CTS line will be in the OFF state. When the computer asserts RTS, the modem will do whatever is necessary to allow data to be sent. At this time, the modem would set CTS to the ON state, which would then allow the computer to send data. When the RTS from the computer returns to the OFF state, the modem releases the channel and set CTS back to the OFF state. Note that a typical computer must have an incoming CTS signal before it can transmit. This signal must be brought over from the modem.

6 Data Set Ready (DSR)

This circuit is the signal that informs the computer of the modem state by going active when the modem is powered-up. A typical computer must have an incoming DSR in order to function normally. It is normally set to the ON position.

7 Signal Ground (SG)

This circuit is the ground to which all other voltages are relative. It must be present in any RS-232 interface.

8 Data Carrier Detect (DCD)

This circuit is the signal where the modem informs the computer that it has an incoming carrier. It may be used to determine if the channel is idle. This is so the computer can request it with RTS. Note that some computers must have an incoming DCD before they will operate.

15 Transmit Clock (TC)

This circuit provides the clock for the transmitter section of a synchronous computer. It may or may not be running at the same rate as the receiver clock. This circuit must be utilized on synchronous interfaces.

17 Receive Clock (RC)

This circuit provides the clock for the receive section of a synchronous computer. It may or may not be running at the same rate as the TC sourced by the modem. Note that both TC and RC in this circuit must be utilized on synchronous interfaces.

20 Data Terminal Ready (DTR)

This circuit provides the signal that informs the modem that the computer is alive and well. It is normally set to the ON state by the computer at power-up and left there. Note that a typical modem must have an incoming DTR before it will function normally. This signal must be brought over from the computer. On the computer side of the interface, this signal is usually present, and may be sent to other circuits (e.g. DSR, CTS and/or DCD) to satisfy required hand-shaking signals if their normal function is not required.

IEEE-488, General Purpose Interface Bus

The IEEE-488 interface is a standard defined by the Institute of Electrical and Electronics Engineers (IEEE) that is used to transfer data between computers and instruments, mainly for the use of test and measurement equipment. It was originally developed by Hewlett Packard and marketed as Hewlett Packard interface bus (HP-IB). It is a modest-speed multi-drop bus allowing simple connection and software control of a wide variety of electronic instrumentation and test equipment. IEEE-488 is now one of the most popular interfaces worldwide, and has become one of the major standards for test and measurement systems. It is known by three names: GPIB, HP-IB, and IEEE-488 bus.

GPIB is a cable-based bus with a special connector, which allows several instruments to be connected together in any basic configuration. Each cable end has a combined male and female connector to allow parallel connection of cables at any device. Some of the key features of the IEEE-488 interface are:

- Maximum data rate is 1 byte/second.
- Up to 15 devices may be connected to one bus.
- One byte (8 bits) of digital information is sent in parallel at a time.
- Message transactions are hardware handshakes using special bus lines.
- Total bus length may be up to 20 meters and the distance between devices may be up to 2 meters.
- The limitations in maximum distance and number of units may be avoided by using special units such as bus extenders and bus expanders.

The controller of the bus will send out an interrupt request to a piece of equipment. The equipment will examine the interrupt and provide an 8-bit answer. Then the controller will examine the answer and produce outputs for measurement accordingly.

The original document produced by the IEEE contained no guidelines for preferred programming and format conventions. Even though this happened, work has continued on making the GPIB more compatible and configurable with all system types. The newest document produced, contains specification information including the Standard Commands for Programmable Instrumentation (SCPI). SCPI defines specific commands that each instrument class (instruments from various vendors) must obey. This means that with the development of SCPI, compatibility is insured whether using military or commercial systems. Only the actual software operating the device is different, not the actual use of the bus itself. Because of the modern day standard, it is not necessary to learn different commands for each instrument. The software is built-in to all communication systems, computer systems, and most importantly, test equipment.

009. Waveguides

A waveguide is the equivalent of a coaxial cable with the central conductor and supporting insulation spacing removed so that all that remains is a hollow pipe. In practice, waveguides are hollow pipes, normally rectangular or cylindrical, and fabricated out of material having good electrical conductivity. Waveguides are used principally at frequencies in the microwave range; inconveniently large guides would be required to transmit radio-frequency power at longer wavelengths. In the X-Band frequency range of 8.2 to 12.4 GHz, for example, the U.S. standard rectangular waveguide, WR-90, has an inner width of 2.286 cm (0.9 in.) and an inner height of 1.016 cm (0.4 in.).

Application

Waveguides become increasingly necessary at higher frequencies. They are indispensable for the transmission and propagation of RF energy when the wavelength dimension is reduced to inches or even less, as in the case of super high frequencies. This is particularly true when the distance between the central conductor and the inner sheath of a coaxial cable approaches the dimensions of quarter-wavelength. At that limit, a coaxial cable becomes either impossible or unpredictable in actual practice. The RF energy under such a condition takes a complex or unpredictable path in addition to the longitudinal path provided by the central conductor. It may, for example, try to take lateral or semi-lateral paths as if the central conductor were the earth and the conducting inner sheath wall of the coaxial cable were an ionospheric reflecting layer. While it is conceivable that a set of conditions involving extremely careful dimensions and uniformity of the cable can permit the use of coaxial cable at super high frequencies, it is much more feasible and efficient to use simple waveguide pipe.

Types of waveguide

Although any transmission arrangement serves as a guiding structure for electromagnetic waves, the term waveguide is reserved for the type that consists of a single hollow conductor. Although a waveguide may have almost any shape, the two types in common use are those having rectangular and circular cross sections. The characteristics of the rectangular waveguide are determined by the height and width. These dimensions are always the inside measurements, the smaller of the two

customarily being taken as height, even though it may lie in a horizontal plane. The characteristics of the circular waveguide are determined by the diameter, which is always the inside measurement.

Waveguide theory

The two-wire transmission line used in conventional circuits is inefficient for transferring electromagnetic energy at microwave frequencies. At these frequencies, energy escapes by radiation because the fields are not confined in all directions, as illustrated in figure 2–14. Coaxial lines are more efficient than two-wire lines for transferring electromagnetic energy because the fields are completely confined by the conductors, as illustrated in figure 2–15.

Waveguides are the most efficient way to transfer electromagnetic energy. Waveguides are essentially coaxial lines without center conductors. They are constructed from conductive material and may be rectangular, circular, or elliptical in shape, as shown in figure 2–16.

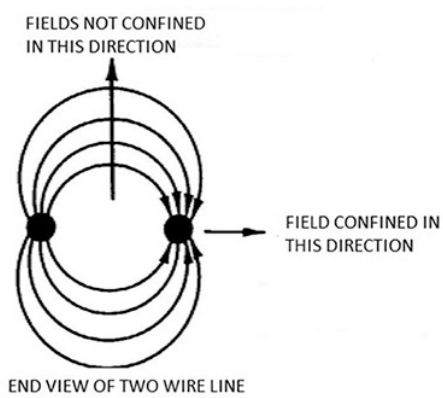

Figure 2–14. Fields confined in two directions only.

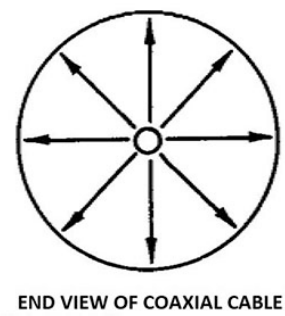

Figure 2–15. Fields confined in all directions.

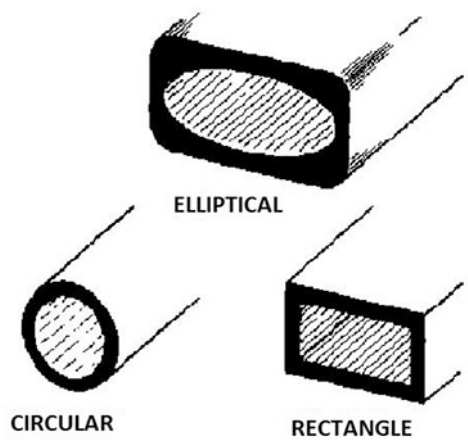

Figure 2–16. Waveguide shapes.

Waveguide advantages

Waveguides have several advantages over two-wire and coaxial transmission lines. For example, the large surface area of waveguides greatly reduces copper losses (I^2R). Two-wire transmission lines have large copper losses because they have a relatively small surface area. The surface area of the outer conductor of a coaxial cable is large, but the surface area of the inner conductor is relatively small. At microwave frequencies, the current-carrying area of the inner conductor is restricted to a very small layer at the surface of the conductor by an action called *skin effect*.

Skin effect tends to increase the effective resistance of the conductor. Although energy transfer in coaxial cable is caused by electromagnetic field motion, the magnitude of the field is limited by the size of the current-carrying area of the inner conductor. The small size of the center conductor is even further reduced by skin effect and energy transmission by coaxial cable becomes less efficient than by waveguides. Dielectric losses are also lower in waveguides than in two-wire and coaxial transmission lines. Dielectric losses in two-wire and coaxial lines are caused by the heating of the insulation between the conductors. The insulation behaves as the dielectric of a capacitor formed by the two wires of the transmission line. A voltage potential across the two wires causes heating of the dielectric and results in a power loss. In practical applications, the actual breakdown of the insulation between the conductors of a transmission line is more frequently a problem than is the dielectric loss.

This breakdown is usually caused by stationary voltage spikes or "nodes" which are caused by standing waves. Standing waves are stationary and occur when part of the energy traveling down the line is reflected by an impedance mismatch with the load. The voltage potential of the standing waves at the points of greatest magnitude can become large enough to break down the insulation between transmission line conductors.

The dielectric in waveguides is air, which has a much lower dielectric loss than conventional insulating materials. However, waveguides are also subject to dielectric breakdown caused by standing waves. Standing waves in waveguides cause arcing, which decreases the efficiency of energy transfer and can severely damage the waveguide. In addition, since the electromagnetic fields are completely contained within the waveguide, radiation losses are kept very low.

Power-handling capability is another advantage of waveguides. Waveguides can handle more power than coaxial lines of the same size because power-handling capability is directly related to the distance between conductors. Figure 2–17 illustrates the greater distance between conductors in a waveguide.

In view of the advantages of waveguides, you would think that waveguides should be the only type of transmission lines used. However, waveguides have certain disadvantages that make them practical for use only at microwave frequencies.

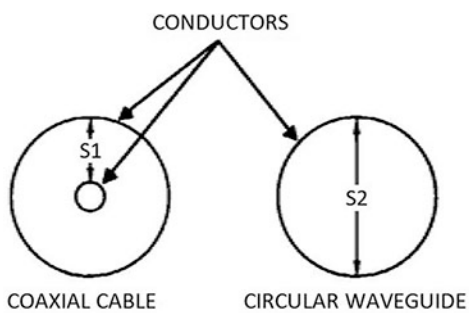

Figure 2–17. Comparison of spacing in coaxial cable and a circular waveguide.

Waveguide disadvantages

Physical size is the primary lower frequency limitation of waveguides. The width of a waveguide must be approximately a half wavelength at the frequency of the wave to be transported. For example, a waveguide for use at 1 MHz would be about 500 feet wide. This makes the use of waveguides at frequencies below 1000 MHz increasingly impractical. The lower frequency range of any system using waveguides is limited by the physical dimensions of the waveguides.

Waveguides are difficult to install because of their rigid, hollow-pipe shape. Special couplings at the joints are required to assure proper operation. Also, the inside surfaces of waveguides are often plated with silver or gold to reduce skin effect losses. These requirements increase the costs and decrease the practicality of waveguide systems at any other than microwave frequencies.

Energy propagation in waveguides

Since energy is transferred through waveguides by electromagnetic fields, you need a basic understanding of field theory. Both magnetic fields (H-field) and electric fields (E-field) are present in waveguides, and the interaction of these fields causes energy to travel through the waveguide. This action is best understood by first looking at the properties of the two individual fields.

Electric field

An E-field exists when a difference of potential causes a stress in the dielectric between two points. The simplest E-field is one that forms between the plates of a capacitor when one plate is made positive compared to the other, as shown in figure 2–18. The stress created in the dielectric is an E-field.

E-fields are represented by arrows that point from the positive toward the negative potential. The number of arrows shows the relative strength of the field. In figure 2–18, for example, evenly spaced arrows indicate the field is evenly distributed. For ease of explanation, the electric field is abbreviated E-field, and the lines of stress are called E-lines.

The two-wire transmission line, illustrated in figure 2–19, has an instantaneous standing wave of voltage applied to it by the generator. The line is short-circuited at one-wavelength, at the positive and negative voltage peaks, but the arrows, representing each field, point in opposite directions. The voltage across the line varies sinusoidally. Therefore, the density of the E-lines varies sinusoidally.

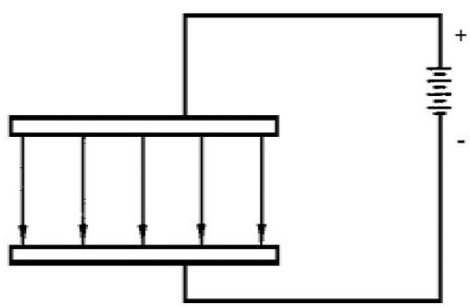

Figure 2–18. Simple electric fields (capacitor).

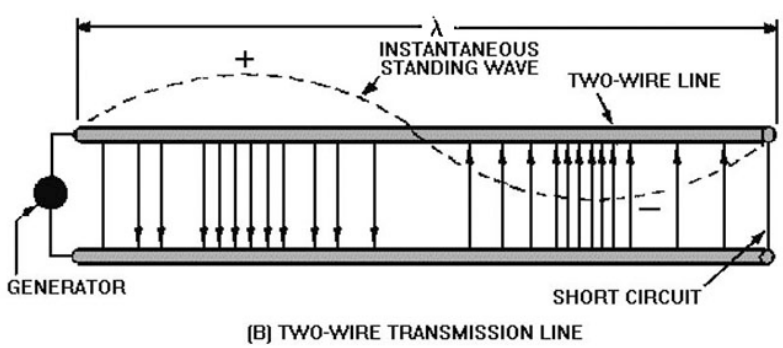

Figure 2–19. Simple electric fields (two-wire transmission line).

The development of the E-field in a waveguide can be illustrated by a two-wire transmission line separated by several, double quarter-wave sections, called half-wave frames, as illustrated in figure 2–20. As shown, the voltage across the two-wire line varies in a sine-wave pattern and the density of the E-field also varies in a sine-wave pattern. The half-wave frames located at high-voltage points (1) and (3) have a strong E-field. The frames at the zero-voltage points (2) have no E-fields present. Frame (4) has a weak E-field and is located at a point between maximum and minimum voltage. This illustration is a buildup to the three-dimensional aspect of the full E-field in a waveguide.

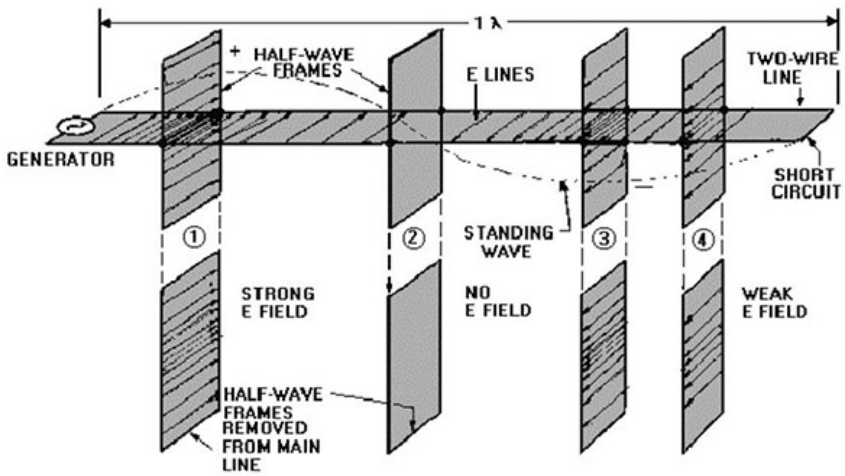

Figure 2–20. E-fields on a two-wire line with half-wave frames.

Figure 2–21, view (A), shows the E-field pattern created by a voltage sine wave applied to a one-wavelength section of waveguide shorted at one end. The E-fields are represented by the arrows shown in views (B) and (C). In the top view of view (A), the tip of each arrow is represented by a dot and the tail of each arrow is represented by an X. The E-field varies in density at the same sine-wave rate as the applied voltage. This illustration represents the instant that the applied voltage wave is at its peak. At other times, the voltage and the E-field in the waveguide vary continuously from zero to the peak value. Voltage and E-field polarity reverse with every reversal of the input. Note that the end view shown in view (B) shows the E-field is maximum at the center and minimum near the walls of the waveguide. View (C) shows the arrangement of electromagnetic fields within a three-dimensional waveguide.

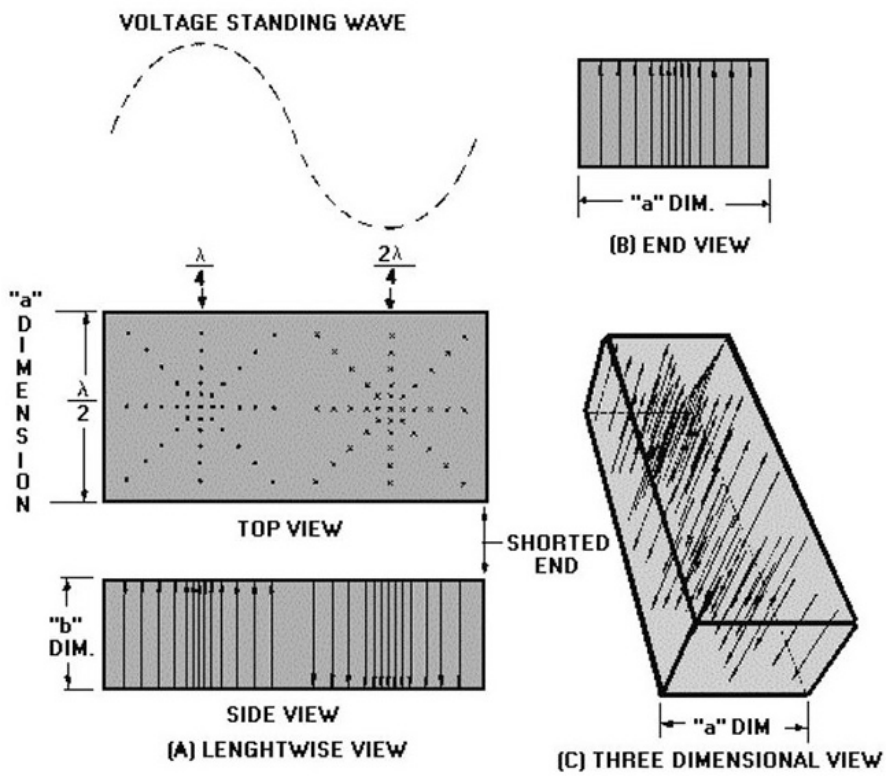

Figure 2–21. E-field of a voltage standing wave across a 1-wavelength section of a waveguide.

Magnetic field

The H-field in a waveguide is made up of magnetic lines of force that are caused by current flow through the conductive material of the waveguide. Magnetic lines of force, called H-lines, are continuous closed loops, as shown in figure 2–22. All of the H-lines associated with current are collectively called an H-field. The strength of the H-field, indicated by the number of H-lines in a given area, varies directly with the amount of current.

Although H-lines encircle a single, straight wire, they behave differently when the wire is formed into a coil, as shown in figure 2–23. In a coil, the individual H-lines tend to form around each turn of wire. Since the H-lines take opposite directions between adjacent turns, the field between the turns is cancelled. Inside and outside the coil, where the direction of each H-field is the same, the fields join and form continuous H-lines around the entire coil.

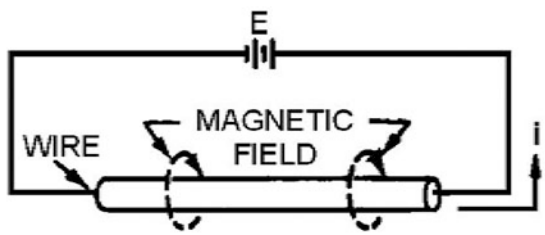

Figure 2–22. Magnetic field on a single wire.

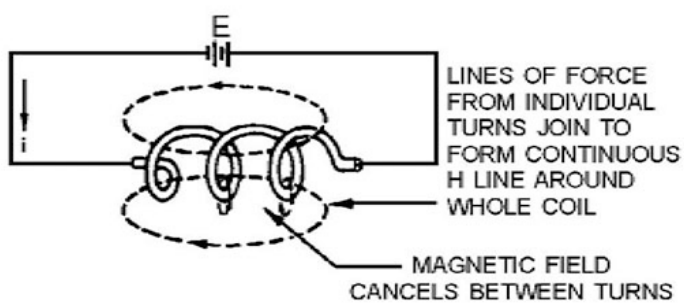

Figure 2–23. Magnetic field on a coil.

A similar action takes place in a waveguide. In figure 2–24, a two-wire line with quarter-wave sections is shown. Currents flow in the main line and in the quarter-wave sections. The current direction produces the individual H-lines around each conductor as shown. When a large number of sections exist, the fields cancel between the sections, but the directions are the same both inside and outside the waveguide. At half-wave intervals on the main line, current will flow in opposite directions. This produces H-line loops having opposite directions. In figure 2–24, current at the left end is opposite to the current at the right end. The individual loops on the main line are opposite in direction. All around the framework, they join so that the long loop shown in figure 2–25 is formed. Outside the waveguide the individual loops cannot join to form a continuous loop. Thus, no magnetic field exists outside a waveguide.

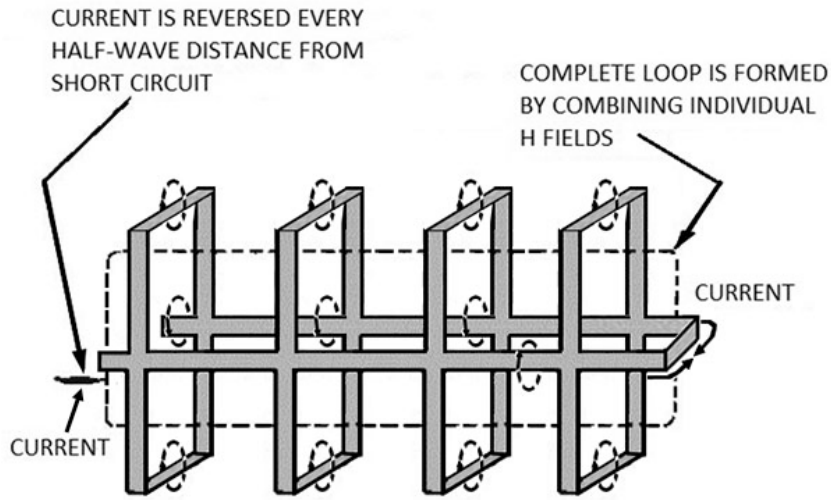

Figure 2–24. Magnetic fields on a two-wire line with half-wave frames.

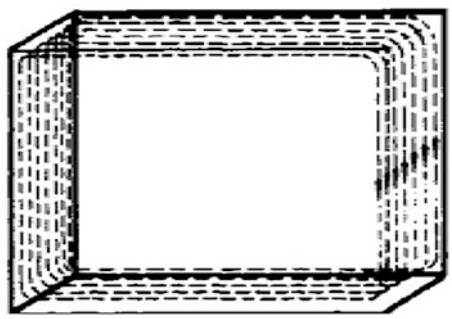

Figure 2–25. Magnetic fields on a two-wire line with half-wave frames (cross section).

If the two-wire line and the half-wave frames are developed into a waveguide that is closed at both ends (as shown in figure 2–25), the distribution of H-lines will be as shown in figure 2–26. If the waveguide is extended to 1-1/2λ, these H-lines form complete loops at half-wave intervals with each group reversed in direction. Again, no H-lines can form outside the waveguide as long as it is completely enclosed.

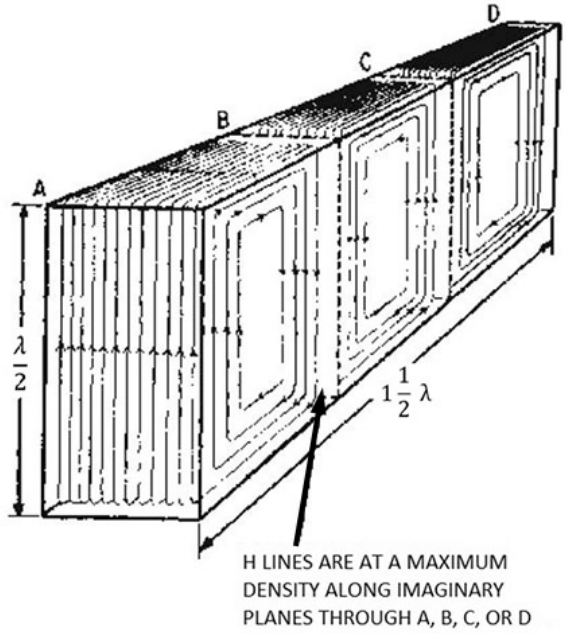

Figure 2–26. Magnetic field pattern in a waveguide.

Figure 2–27 shows a cross-sectional view of the magnetic field pattern illustrated in figure 2–26. Note in view (A) that the field is strongest at the edges of the waveguide where the current is highest. The minimum field strength occurs at the zero-current points. View (B) shows the field pattern as it appears λ/2 from the end view of the waveguide. As with the previously discussed E-fields, the H-fields shown in figures 2–26 and 2–27 represent a condition that exists at only one instant in time. During the peak of the next half cycle of the input current, all field directions are reversed and the field will continue to change with changes in the input.

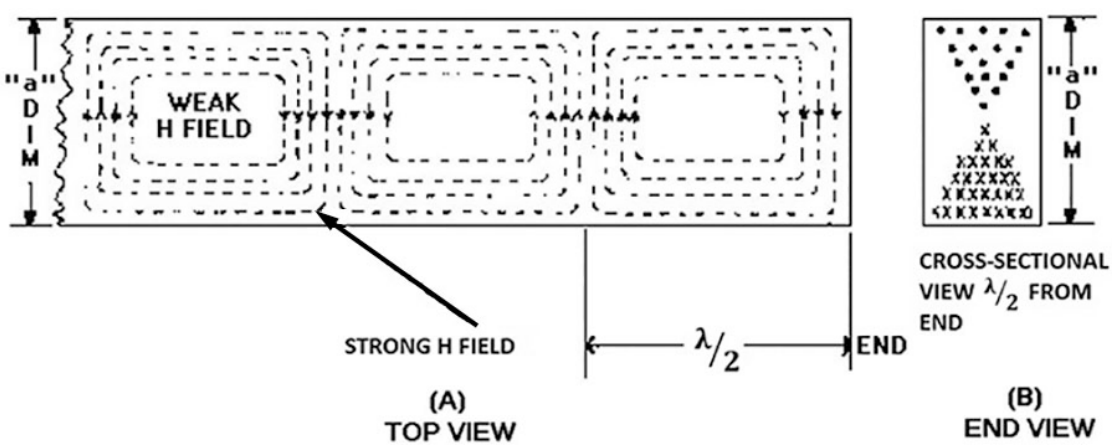

Figure 2–27. Magnetic field in a waveguide three half-wavelengths long.

Waveguide input/output methods

A waveguide operates differently from an ordinary transmission line. Therefore, special devices must be used to put energy into a waveguide at one end and remove it from the other end. The three devices used to inject or remove energy from waveguides are *probes*, *loops*, and *slots*. Slots may also be called *apertures* or *windows*.

When a small probe is inserted into a waveguide and supplied with microwave energy, it acts as a quarter-wave antenna. Current flows in the probe and sets up an E-field such as the one shown in

figure 2–28. The E-lines detach themselves from the probe. When the probe is located at the point of highest efficiency, the E-lines set up an E-field of considerable intensity.

The most efficient place to locate the probe is in the center of the “a” wall, parallel to the “b” wall, and one quarter-wavelength from the shorted end of the waveguide, as shown in figure 2–29, and figure 2–30. This is the point at which the E-field is maximum in the dominant mode. Therefore, energy transfer (coupling) is maximum at this point. Note that the quarter-wavelength spacing is at the frequency required to propagate the dominant mode.

In many applications, a lesser degree of energy transfer, called loose coupling, is desirable. The amount of energy transfer can be reduced by decreasing the length of the probe, by moving it out of the center of the E-field, or by shielding it. Where the degree of coupling must be varied frequently, the probe is made retractable so the length can be easily changed.

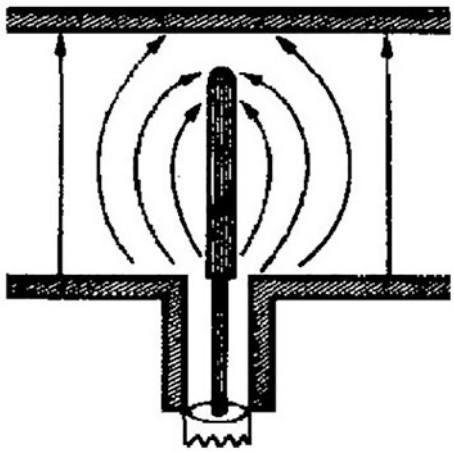

Figure 2–28. Current flows in probe coupling of a rectangular waveguide.

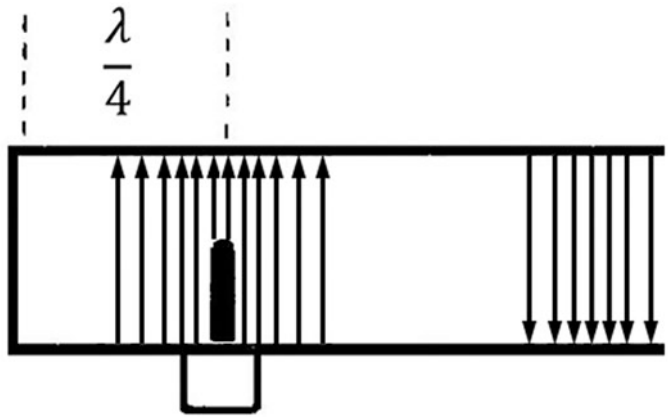

Figure 2–29. Ideal probe coupling location in a rectangular waveguide.

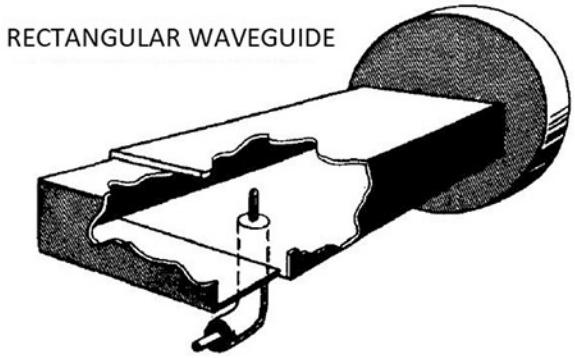

Figure 2–30. Physical representation of a probe coupling in a rectangular waveguide.

The size and shape of the probe determines its frequency, bandwidth, and power-handling capability. As the diameter of a probe increases, the bandwidth increases. A probe similar in shape to a doorknob is capable of handling much higher power and a larger bandwidth than a conventional probe. The greater power-handling capability is directly related to the increased surface area. Two examples of broad-bandwidth probes are illustrated in figure 2–31. Removal of energy from a waveguide is simply a reversal of the injection process using the same type of probe.

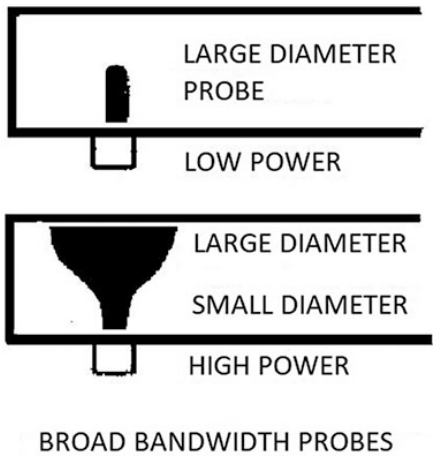

Figure 2–31. Broad-bandwidth probes.

Another way of injecting energy into a waveguide is by setting up an H-field in the waveguide. This can be accomplished by inserting a small loop, which carries a high current into the waveguide, as shown in figure 2–32. A magnetic field builds up around the loop and expands to fit the waveguide, as shown in figure 2–33. If the frequency of the current in the loop is within the bandwidth of the waveguide, energy will be transferred to the waveguide.

For the most efficient coupling to the waveguide, the loop is inserted at one of several points where the magnetic field will be of greatest strength. Four of those points are shown in figure 2–34.

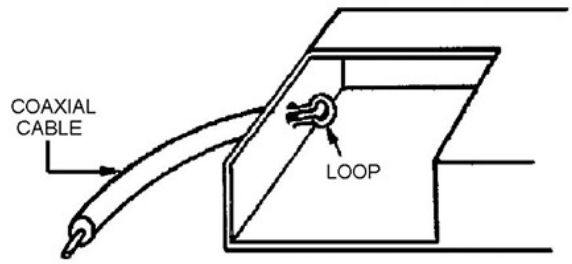

Figure 2–32. Loop coupling in a rectangular waveguide.

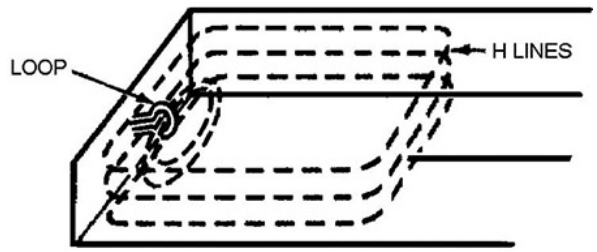

Figure 2–33. Magnetic field of loop coupling in a rectangular waveguide.

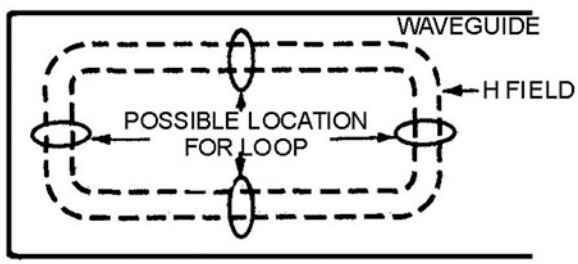

Figure 2–34. Ideal loop coupling locations in a rectangular waveguide.

When less efficient coupling is desired, you can rotate or move the loop until it encircles a smaller number of H-lines. When the diameter of the loop is increased, its power-handling capability also increases. The bandwidth can be increased by increasing the size of the wire used to make the loop.

When a loop is introduced into a waveguide in which an H-field is present, a current is induced in the loop. When this condition exists, energy is removed from the waveguide.

Slots or apertures are sometimes used when very loose (inefficient) coupling is desired, as shown in figure 2–35. In this method energy enters through a small slot in the waveguide and the E-field expands into the waveguide. The E-lines expand first across the slot and then across the interior of the waveguide.

Minimum reflections occur when energy is injected or removed if the size of the slot is properly proportioned to the frequency of the energy.

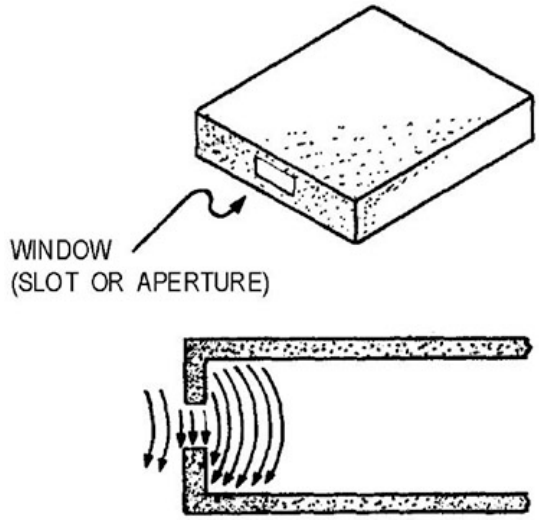

Figure 2–35. Slot coupling in a waveguide.

After learning how energy is coupled into and out of a waveguide with slots, you might think that leaving the end open is the simplest way of injecting or removing energy in a waveguide. This is not the case, however, because when energy leaves a waveguide, fields form around the end of the waveguide. These fields cause an impedance mismatch, which in turn, causes the development of standing waves and a drastic loss in efficiency.

Self-Test Questions

After you complete these questions, you may check your answers at the end of the unit.

007. Transmission lines

1. Define “transmission line” and give an example of one.

2. What are some of the types of transmission line loss?

3. Name two methods of reducing induction loss.

4. What are the causes of major power loss in a flexible coaxial cable?

5. Why is there very little radiation loss in a rigid coaxial cable?

6. What determines Z_o of a transmission line?

7. What are the primary determinants of a line's *capacitance*?

8. What does "cutoff frequency" refer to when you talk about transmission lines?

9. Define "wavelength."

10. What happens to wavelength as a signal's frequency *decreases*?

11. What is electrical length?

12. What is the unit of measure for electrical length?

13. What happens to electrical length as signal frequency *decreases*?

14. Describe a nonresonant transmission line.

15. What is an *incident wave*?

16. What is a *standing wave*?

17. Define "VSWR."

18. If a transmission line has a perfect impedance match, what would the VSWR be?

19. What is the voltage level at an *open termination*?

20. What is the phase relationship between forward and reflected voltage waves when the line is *terminated in a short*?

21. What can you use to match a 50-Ω cable to a 600-Ω antenna?

008. Data bus

1. What applications were the MIL-STD-1553 data bus was specifically designed for?

2. What is the maximum number of users for the MIL-STD-1553 system?

3. Which instruction word monitors “faults” in the remote units?

4. The binary makeup for data word 5 is 0 0101 0101 1001 10. What frequency does this represent?

5. What connectors are almost universally used on the RS-232 data bus?

6. In a simplex channel, what direction does data travel?

7. What is the difference between half-duplex and full-duplex communications?

8. Explain why a modem is useful in communications circuits.

9. Describe what a discrete RS-232 signal is.

10. What is another name for chassis ground and what is its purpose?

009. Waveguides

1. What frequency range are waveguides principally used?

2. At what point do coaxial cables become either impossible or unpredictable to use?

3. Why are coaxial lines more efficient at microwave frequencies than two-wire transmission lines?

4. What kind of material must be used in the construction of waveguides?

5. The large surface area of a waveguide greatly reduces what type of loss that is common in two-wire and coaxial lines?

6. What causes the current-carrying area at the center conductor of a coaxial line to be restricted to a small layer at the surface?

7. What is used as a dielectric in waveguides?

8. What is the primary lower-frequency limitation of waveguides?

9. What interaction causes energy to travel down a waveguide?

10. What is indicated by the number of arrows (closeness of spacing) used to represent an electric field?

11. What primary condition must magnetic lines of force meet in order to exist?

12. What happens to the H-lines between the conductors of a coil when the conductors are close together?

13. What determines the frequency, bandwidth, and power-handling capability of a waveguide probe?

14. Loose or inefficient coupling of energy into or out of a waveguide can be accomplished by the use of what method?

2−2. Modulation Principles and Techniques

The signals used to convey information in communication systems are typically low frequency signals or are in a format that does not allow transmission into different mediums. For example, human speech contains little energy at frequencies above 5 kilohertz (kHz). Music includes harmonics of the dominant tones that extend to no more than 20 kHz. Computers and other digital equipment cannot transmit data directly through other mediums in digital format. Therefore, we must modulate these signals for transmission.

Ease of radiation is one reason to modulate a signal. An efficient radiator (antenna) of RF energy must be no smaller than one-quarter wavelength of the radiated signal. Since one wavelength of a 1 kHz tone is equal to a little more than 88 miles and one quarter of this equals 22 miles, transmission over long distances is impractical at frequencies this low. Modulation allows us to transmit low frequency signals at higher frequencies. It also makes it easier to radiate digital signals.

010. Amplitude modulation

In AM, the carrier itself does not fluctuate in amplitude. Instead, the modulating signal appears in the form of signal components at frequencies slightly higher and lower than that of the carrier. Figure 2–36 illustrates the amplitude of the composite waveform that is varied instant by instant as the modulating signal level varies. In other words, information is contained in the variation of the modulated waveform.

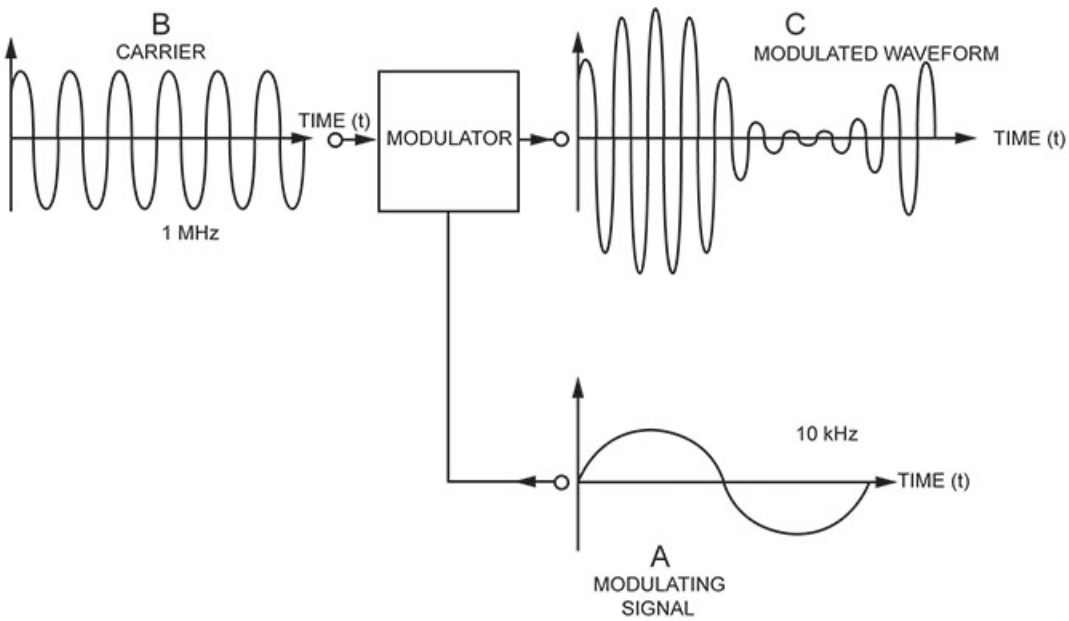

Figure 2–36. Amplitude modulation.

Amplitude modulation theory

Figure 2–36 shows the modulating signal (A) and the carrier signal (B) as inputs to the modulator and the output signal (C). Notice that the modulating signal is riding on top of the carrier wave. The picture of the output waveform gives no clue that the modulating signal translates along the frequency scale. Early experimenters discovered this by examining the frequencies of components that were present in the output waveform. They found that the output signal contained not only the carrier wave frequency but also two new frequencies. One of these was equal to the sum of the carrier frequency and the modulating signal frequency, called an *upper sideband* (USB). The other frequency was equal to the difference between the carrier frequency and the modulating frequency—called the *lower sideband* (LSB). Therefore, the three frequencies are the unmodulated carrier (which conveys no information), a USB, and a LSB. The information we are trying to transfer from one point to another

is contained in the sidebands. For example, assume a carrier frequency of 1 MHz and a modulating tone of 10 kHz go to the modulator. The outputs include 1 MHz (carrier), 1.01 MHz (USB), and the 0.99 MHz (LSB). Remember, the USB and LSB carry the information. The information carrying components (sidebands) are on either side of the carrier frequency and are spaced from it by an amount equal to the modulating signal frequency.

Bandwidth of an AM signal

Bandwidth refers to the space the transmitted signal will occupy in the frequency spectrum. Recall the transmitted frequencies in AM are the carrier signal and the upper and lower sidebands. Look at figure 2–37. We see the USB and LSB are each 10 kHz wide. Therefore, the bandwidth of the transmitted signal is 20 kHz. From the preceding analysis we can now state that the bandwidth of an AM signal is two times the modulating signal frequency. This holds true only when the carrier signal modulates up to, but *not more than*, 100 percent.

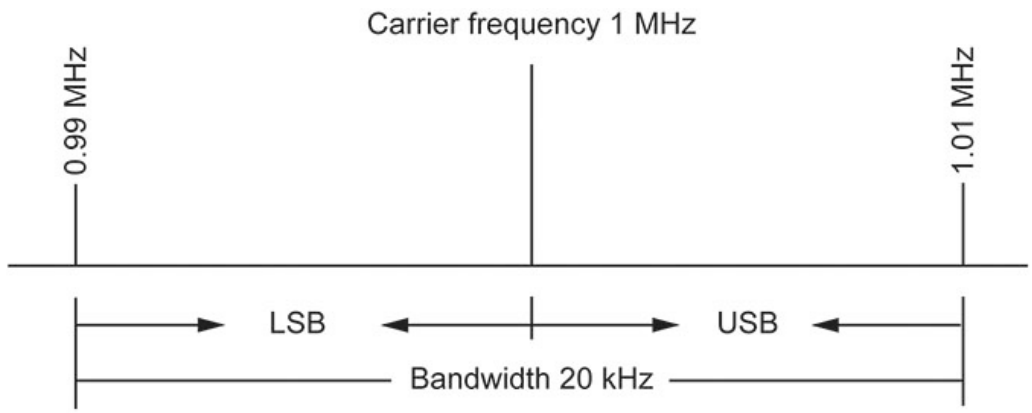

Figure 2–37. Development of sidebands.

Calculating percent of modulation

Modulation is the result of mixing an RF signal with an intelligence signal. The amount of effect or change that the intelligence has on the carrier expresses as the "percent of modulation." You can find the "% mod," using this formula:

$$\%\,mod = \frac{A}{R}\ x\ 100\%\,mod = \frac{A}{R}\ x\ 100$$

Where:

A = Modulating signal amplitude (audio)

R = Modulated signal amplitude (RF)

Ordinarily, you do not know the individual values of the audio and the carrier amplitudes. However, you can use an oscilloscope to display the modulation envelope. A modulation envelope is depicted in figure 2–38C.

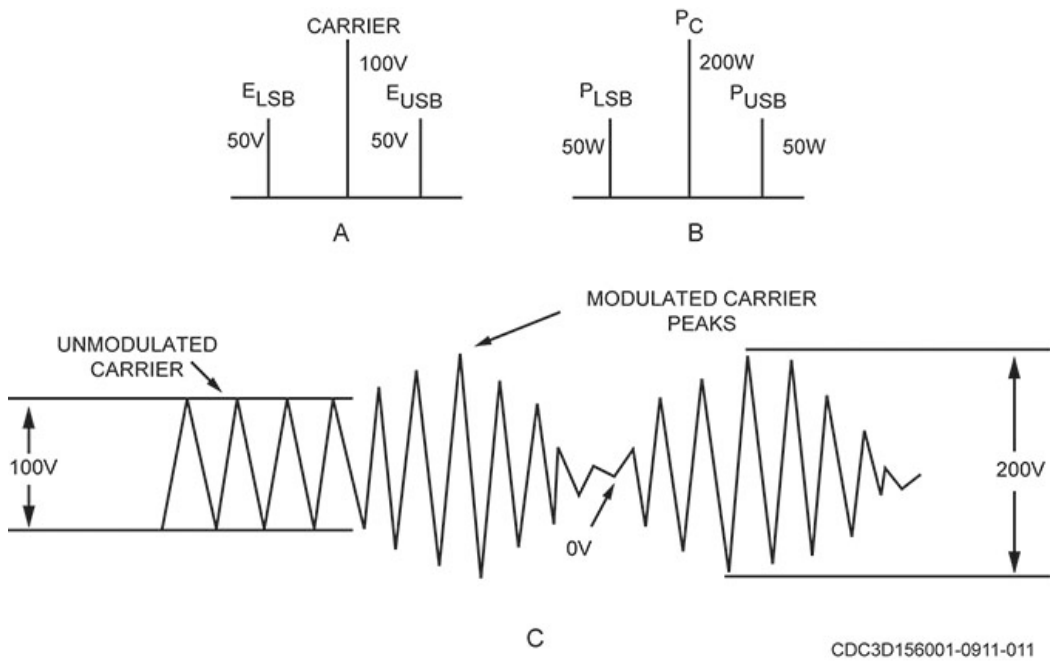

Figure 2–38. AM waveform values.

Using this display, you can calculate the modulation percentage using the formula:

% mod = $\frac{E_{max}-E_{min}}{E_{max}+E_{min}}\ x\ 100$ Using this formula and the values given in figure 2–38C, the modulating percentage, is calculated as follows: $\frac{E_{max}-E_{min}}{E_{max}+E_{min}}\ x\ 100\ \frac{200-0}{200+0}\ x\ 100\ \frac{200}{200}\ x\ 100$

% mod =	$\frac{E_{max}-E_{min}}{E_{max}+E_{min}}\ x\ 100$
=	$\frac{200-0}{200+0}\ x\ 100$
=	$\frac{200}{200}\ x\ 100$
=	1 x 100
% mod =	100 percent

Close observation of the waveform in figure 2–38C, shows the unmodulated carrier signal to be 100 volts (V), peak-to-peak (Vpk-pk), while the measured maximum peak-to-peak (pk-pk) voltage after modulation is 200 Vpk-pk. The minimum carrier voltage after modulation is 0 Vpk-pk. Recall that in the composite waveform two new frequencies were produced during the modulation process. These two frequencies contain the same intelligence and are equal in amplitude. If the unmodulated carrier in figure 2–38C, is 100 Vpk-pk and the modulated carrier is 200 Vpk-pk, then the sum of the sidebands must be 100 Vpk-pk. Since these two signals are equal, each sideband must be 50 Vpk-pk. This is demonstrated graphically in figure 2–38A. Any percent of modulation, which is less than that for which your system is designed to use, is termed *under modulation*. Anything greater than 100 percent is termed *over modulation*. With over modulation, the bandwidth of an AM signal increases considerably due to the severe distortion produced. This distortion produces new frequencies (harmonics) that were not in the modulating signal and, thus, causes interference with nearby

channels. The resulting information in the carrier will not reflect the information we are trying to transmit. To prevent over modulation, we usually run radios at slightly less than 100 percent modulation.

Power distribution

The total power radiated in the modulated carrier wave is equal to the sum of the power contained in the separate components of the modulated wave. The best-case scenario is 100 percent modulation because we get the maximum amount of power into the information-carrying sidebands. Under modulation reduces total power by reducing the power in the sidebands.

100 percent modulation

Figure 2–38B shows the voltage levels of the waveform, and figure 2–38A shows the converted power levels (based on a characteristic impedance of 50 Ω). The power in the modulated signal breaks down this way:

- Total power is 300 W.
- 200 W in the carrier.
- 50 W in each sideband.

Notice that the amount of power in the information-carrying sidebands is one-third of the total power. That means that the AM process produces a signal where two-thirds of the output power is wasted. A 100 percent modulated signal is the best-case scenario for maximum power transfer to the information-carrying sidebands.

Under modulation

If we decrease the amount of the modulating signal in the example, the amount of modulation will decrease. If we cut the modulating signal by one-half, the modulation percentage decreases by the same amount. In figure 2–38A, the voltage in the carrier is still 100 V. The sideband voltages would both drop to 25 V. The power in the carrier is still 200 W. Computing the power for each sideband, using the values given, we get 12.5 W per sideband, for a total sideband power of 25 W. To find the Total power in the modulated waveform, add the carrier power to sideband power. Total power is 225 W. From this analysis of power distribution, we find that at 100 percent modulation:

- Total sideband power is one-half the carrier power.
- The carrier contains two-thirds of the total power.
- Total sideband power is one-third of the total transmitted power.
- The sideband power is distributed equally in the two sidebands.
- Each sideband contains one-sixth of the total transmitted power.

Reducing modulation to *less than 100 percent* (under modulation) results in:

- No reduction in carrier power.
- Less power in the information carrying sidebands.
- Less total power.

Interference

Electromagnetic interference (EMI), also called radio-frequency interference (RFI) when in the radio frequency spectrum, is a disturbance generated by an external source that affects an electrical circuit by electromagnetic induction, electrostatic coupling, or conduction. The disturbance may degrade the performance of the circuit or even stop it from functioning. In the case of a data path, these effects can range from an increase in error rate to a total loss of the data. Both man-made and natural sources generate changing electrical currents and voltages that can cause EMI: ignition systems, cellular network of mobile phones, lightning, solar flares, and auroras (Northern/Southern Lights). EMI

frequently affects AM radio reception. It can also affect mobile phones, televisions, and observations for radio astronomy. EMI can be used for radio jamming, as in electronic warfare.

Although AM has the advantages of an inexpensive, simplistic design and is used for long-haul communications, it is highly susceptible to interference and has wasted power in the carrier. A technique called frequency modulation (FM) was developed to help overcome these disadvantages.

011. Frequency modulation

Another way of modulating a carrier wave is FM. In FM, the modulating signal causes the carrier frequency to vary. Both the frequency and amplitude of the modulating wave control these variations. Let's take a closer look at FM.

Frequency modulation theory

In FM, an audio signal controls the frequency of the RF carrier signal, while the amplitude of the RF signal remains constant. The carrier frequency oscillator changes frequency above and below the carrier frequency with each cycle of the intelligence waveform to make the modulated wave. In an FM modulator operating on a 10 MHz carrier frequency, the oscillator deviates above the carrier frequency during the positive half cycle of the modulating signal and below the carrier during the negative half. For example, a 10 MHz oscillator might deviate to 10.1 MHz during the positive half of the modulating cycle and to 9.9 MHz during the negative half of the modulating cycle as shown in figure 2–39.

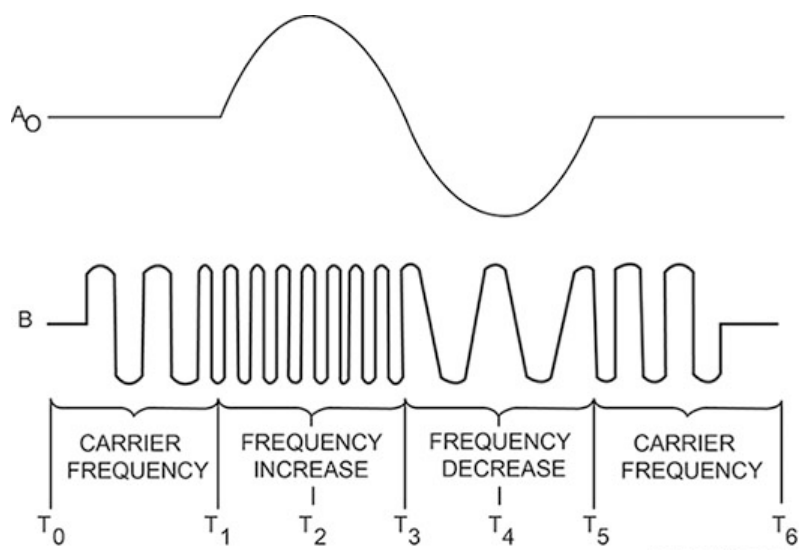

Figure 2–39. Effect of intelligence waveform on the carrier frequency.

For each cycle of the modulating signal, the oscillator deviates one complete cycle (fig. 2–40). Therefore, the oscillator deviation rate is directly proportional to the modulating signal frequency. A 1 kHz audio tone makes the oscillator frequency deviate above and below the carrier frequency 1000 times per second. This is the *rate of deviation*.

How will the amplitude of the modulating signal affect this action? In FM, the modulating signal causes the oscillator to change frequency. The amount it changes is directly proportional to the amplitude of the modulating signal. The larger the modulating signal voltage, the greater the deviation (fig. 2–41). The term for this is *amount of deviation*.

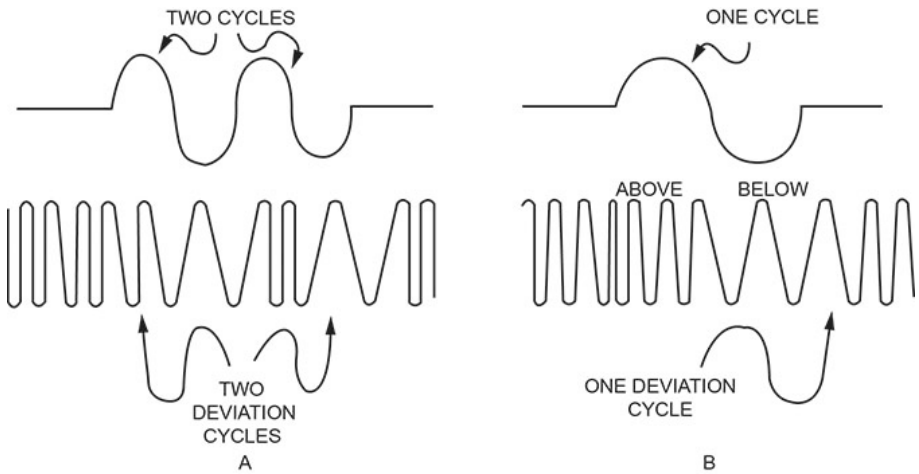

Figure 2–40. Frequency oscillator deviation caused by a modulating signal.

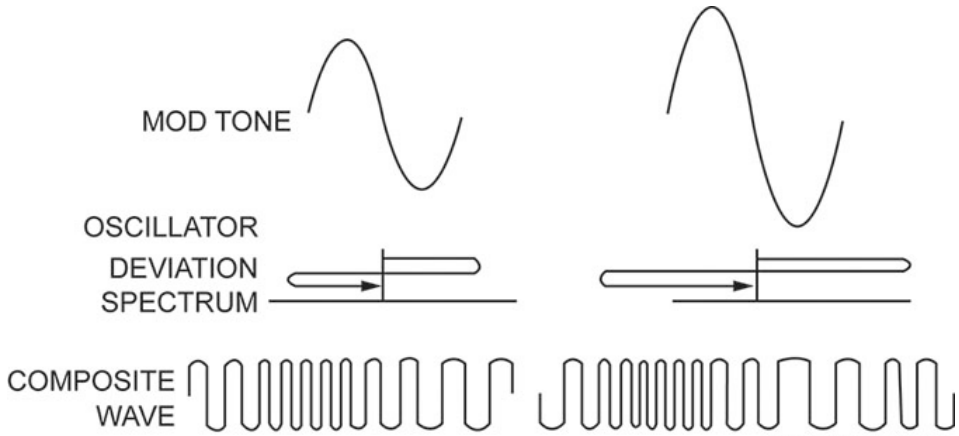

Figure 2–41. Frequency oscillator deviation in proportion to a modulating signal.

Two important rules for FM have been established so far:

- Rate of deviation is proportional to the frequency of the modulating signal.
- Amount of deviation is proportional to the amplitude of the modulating signal.

In figure 2–42, we see that four cycles of an audio tone produces four cycles of deviation. Notice the increase in amplitude of each cycle causes an increase in the frequency deviation. Look at figure 2–43 for a further explanation. Notice in figure 2–43A, that an audio signal with 2 V peak amplitude causes the oscillator to vary 1 kHz above and below the carrier frequency of 100 kHz and establishes the amount of deviation for the output wave shape.

If we increase the amplitude to 4 V peak, the oscillator frequency varies 2 kHz above and below the carrier frequency (fig. 2–43B). If we increase the amplitude of the audio signal to 40 V, the oscillator varies 20 kHz above and below the carrier frequency (fig. 2–43C). The greater the amplitude of the intelligence, the more the oscillator varies. This is acceptable until the range extends into the frequencies assigned to another station and causes interference.

Note in figure 2–44A, that the FM broadcast band is 88 to 108 MHz. Assume that two FM stations have assigned carrier frequencies of 98 and 100 MHz. If the modulating signal causes the 100 MHz channel oscillator to swing too far, it interferes with the station at 98 MHz (fig. 2–44B). To prevent this, the Federal Communications Commission (FCC) established limits. In the FM broadcast band, each station can deviate its oscillator frequency no more than 75 kHz above or below the center frequency.

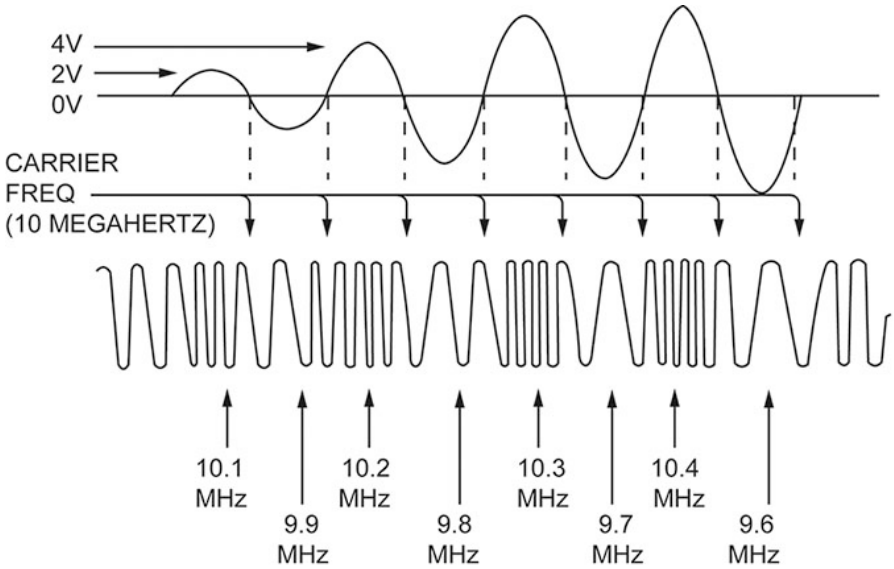

Figure 2–42. Frequency deviation cycles equal number of cycles of audio tone.

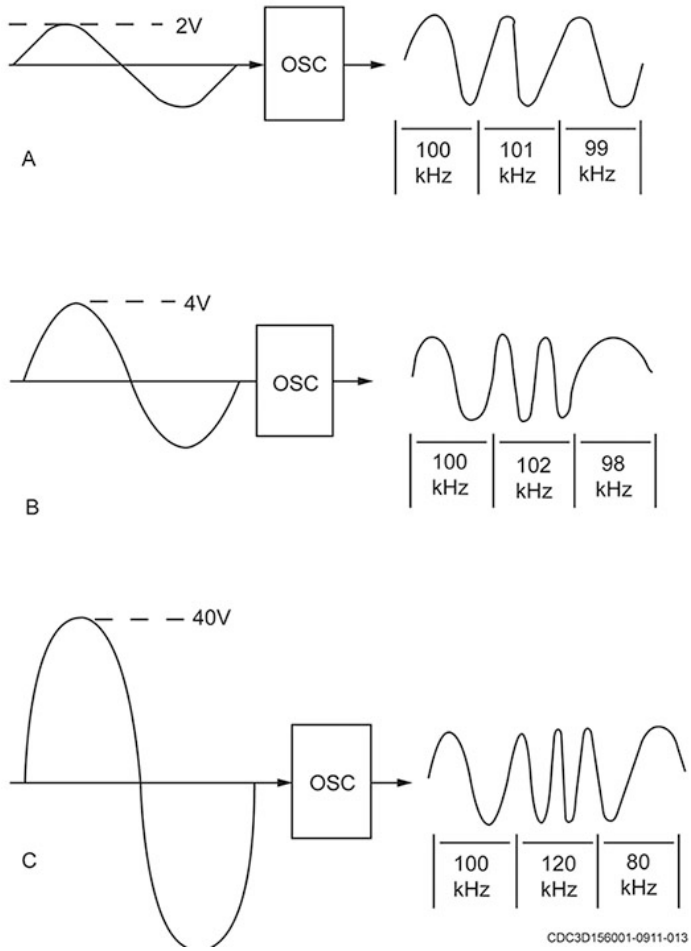

Figure 2–43. Peak signal voltage determines amount of deviation for output wave shape.

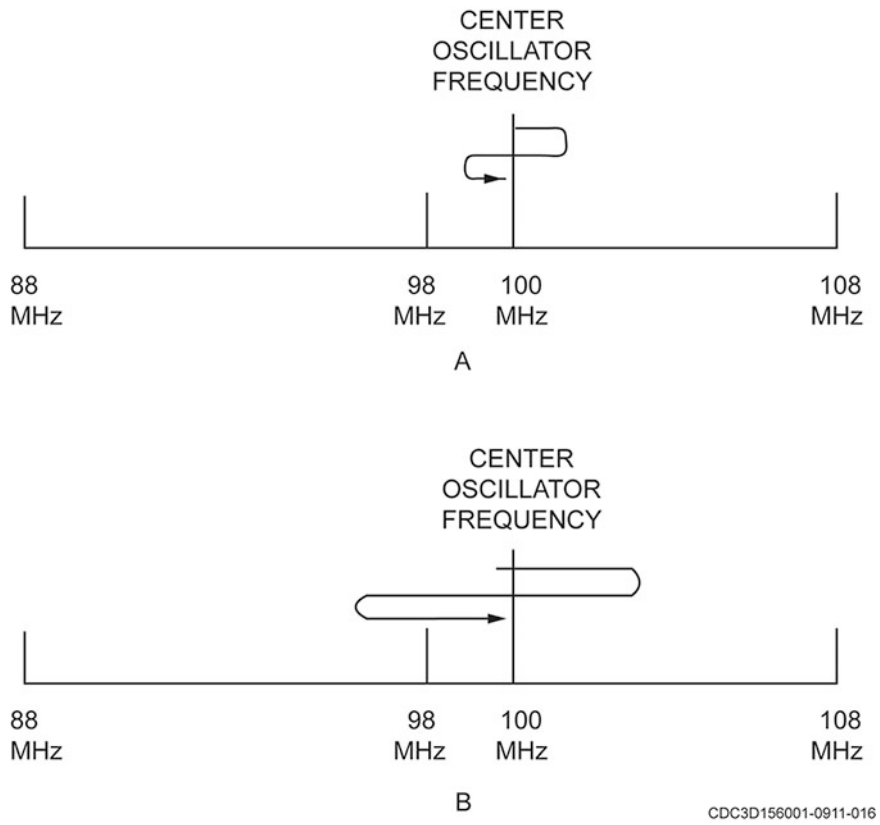

Figure 2–44. Effect of excessive modulation on adjacent FM signal bands.

In FM, the percentage of modulation is not as concrete as in AM. In AM, 100 percent modulation is the maximum amount we can modulate without distorting the intelligence. In FM, percentage of modulation is an imposed limitation. A maximum allowable deviation from the carrier frequency is not a maximum capability. In FM, 100 percent modulation is merely the point where the actual modulated frequency swing equals the maximum amount allowable.

Modulation index/significant sidebands

Consider the 100 MHz carrier frequency again. If the oscillator deviates to a maximum frequency of 100.075 MHz and to a minimum frequency of 99.925 MHz, we have a total swing of 150 kHz. This is the maximum allowable deviation and we call it 100 percent modulation. A smaller audio voltage causes less deviation and the percentage of modulation would be smaller. Figure 2–45 shows a station operating on 100 MHz with a frequency deviation of 25 kHz. Since this is only one-third the allowable deviation, we would be modulating only 33.3 percent. You will seldom hear the term "percent of modulation" used in FM. The term "modulation index" is more useful. *Modulation index* is the amount of frequency deviation divided by the frequency of the modulating signal. For example, if a 5 kHz modulating signal has enough peak voltage amplitude to cause a deviation of 25 kHz, the modulation index would be 25 kHz ÷ 5 kHz = 5.

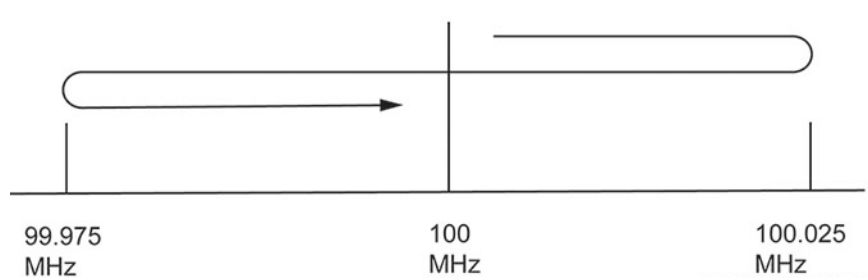

Figure 2–45. FM station frequency deviation.

We use the modulation index to calculate two other important aspects of FM: the number of significant sidebands and the bandwidth requirements. Before we begin any calculations, let us look at the difference between AM and FM signals produced by the same audio tone (fig. 2–46).

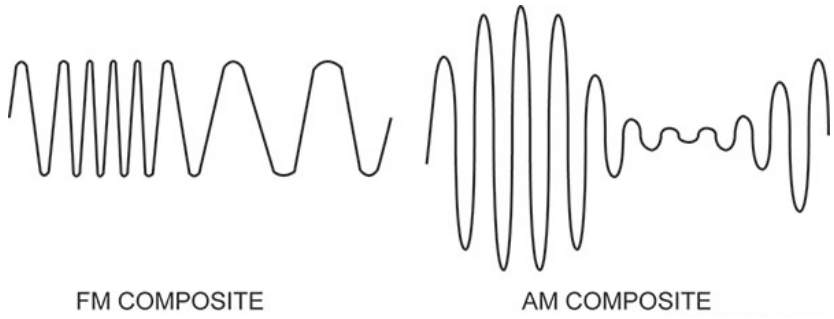

Figure 2–46. Difference between AM and FM signals using the same audio tone.

Neither of the two wave shapes is the same sine curve. Characteristics changed in the carrier to produce a modulated wave. In both cases, the waveform produces a combination of frequencies called sidebands. Therefore, in FM (just as in AM), modulation produces sidebands (fig. 2–47).

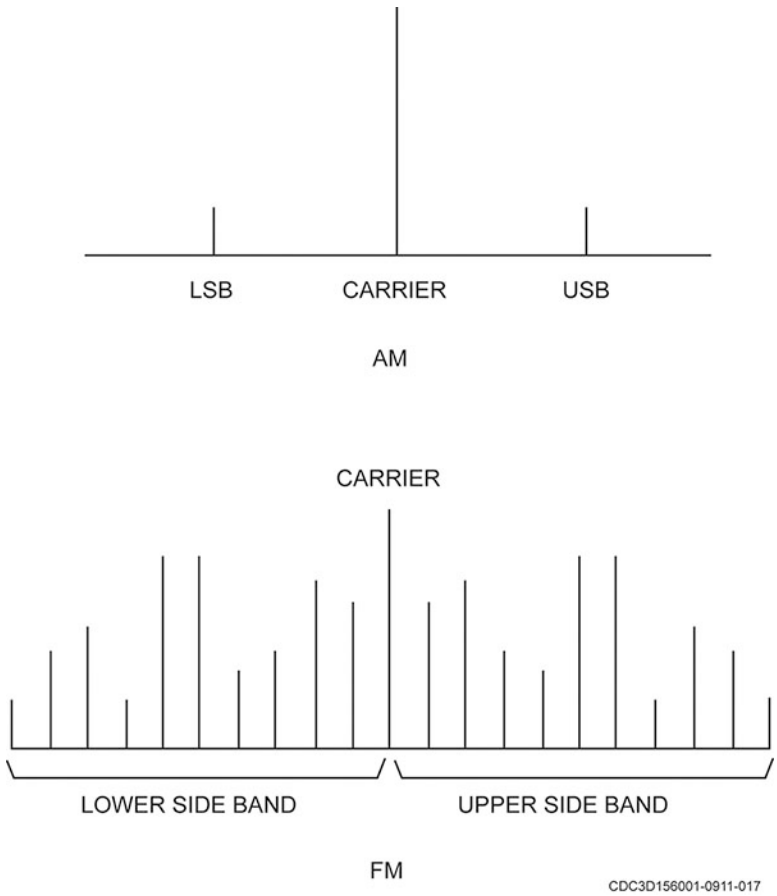

Figure 2–47. Representation of FM sidebands.

As you see, the FM wave has many sideband frequencies above and below the carrier. This is true even when a single tone modulates the carrier. Look at the sideband distribution of a FM wave where the modulating frequency is 5 kHz and the carrier is 500 kHz (fig. 2–48). Each sideband's distance from the carrier (and each other) is 5 kHz. These sidebands continue far beyond the limits of the

illustration, but notice that as the distance from the carrier increases, the sidebands' amplitude diminishes.

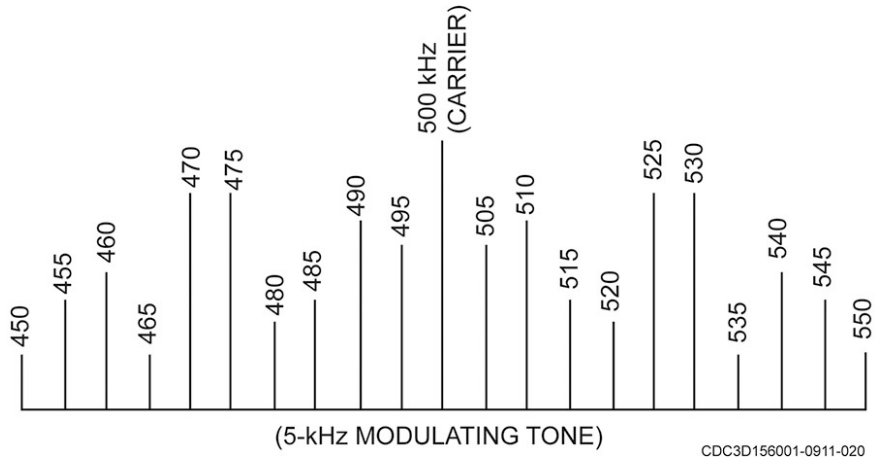

Figure 2–48. Sideband amplitude in relation to distance from the carrier.

These extreme sidebands contain very little of the total transmitted power and therefore are not significant. Only sidebands containing at least one percent of the total transmitted power are significant. You can find the number of significant sidebands for any given case of FM by using a mathematical ratio called modulation index (MI). The formula is:

MI = deviation/frequency of modulation.

To make things easier, a table lists the modulation indexes against pairs of significant sidebands. Here is a partial table listing some modulation indexes with corresponding significant sidebands.

Modulation Index	Significant Sidebands
0.01	2
0.4	2
0.5	4
1	6
2	8
3	12
4	14
5	16
6	18
7	22
8	24
9	26
10	28
11	32
12	32
13	36
14	38
15	38

To find the bandwidth of an FM signal that has 15 kHz deviation at a 5 kHz modulating signal rate you must:

1. Calculate the MI: 15 kHz ÷5 kHz = 3.
2. Using the modulation index table, find the number of significant sidebands: MI of 3 = 12 significant sidebands.
3. Multiply the total number of significant sidebands by the frequency of the modulation signal to find the bandwidth of the FM signal: bandwidth = 12 sidebands × 5 kHz modulation frequency = 60 kHz.
4. This procedure establishes the needed bandwidth of FM signals with a low modulation index (10 or less).

Figure 2–49 shows the composite wave with a 15 kHz deviation at a 5 kHz rate. The resulting frequency swing of 30 kHz may lead to the erroneous belief that a bandwidth of 30 kHz is wide enough to pass the FM signal. This reasoning is wrong because the composite wave is the result of the instantaneous additions and cancellations of ALL the significant sidebands shown in the spectrum plot of figure 2–49. These significant sidebands occupy 60 kHz of spectrum space. Therefore, to produce the composite wave, the bandwidth of the circuits passing the FM signal must be 60 kHz.

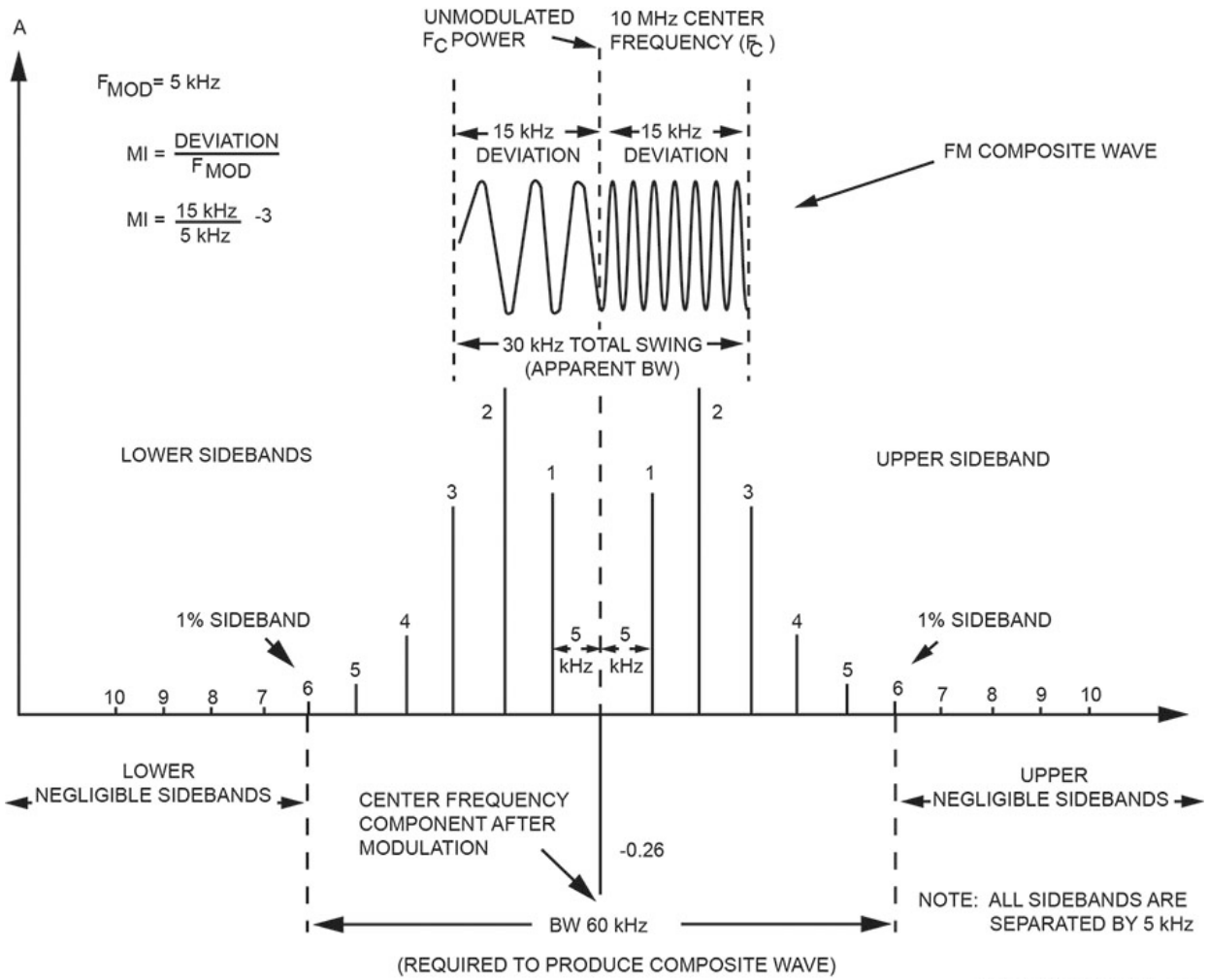

Figure 2–49. Bandwidth of a composite wave.

Sideband power distribution

Sideband power is an important consideration in FM, but the distribution is much more complicated than in AM. In FM, the total output power of the modulated wave never changes. Even when the carrier is unmodulated, the transmitter is transmitting at maximum power. When modulation does occur, the total power remains the same. Therefore, the sidebands must take their power from the unmodulated carrier. A higher modulation index means more power in the sidebands. It is even possible to have all the power in the sidebands and none in the carrier. At this point, any further increase in modulation would start taking power from the sidebands and placing it back in the carrier, resulting in a redistribution of power.

Figure 2–50A, shows a low amplitude-modulating signal and its narrow bandwidth sideband distribution. An increase in the amplitude of the modulating signal causes greater frequency deviation of the oscillator, wider bandwidth, and more power distributed in the sidebands. Notice that when this happens, the carrier power decreases as shown in figure 2–50B. Increasing the amplitude still further results in the power being taken away from the sidebands and placed back in the carrier as shown in figure 2–50C.

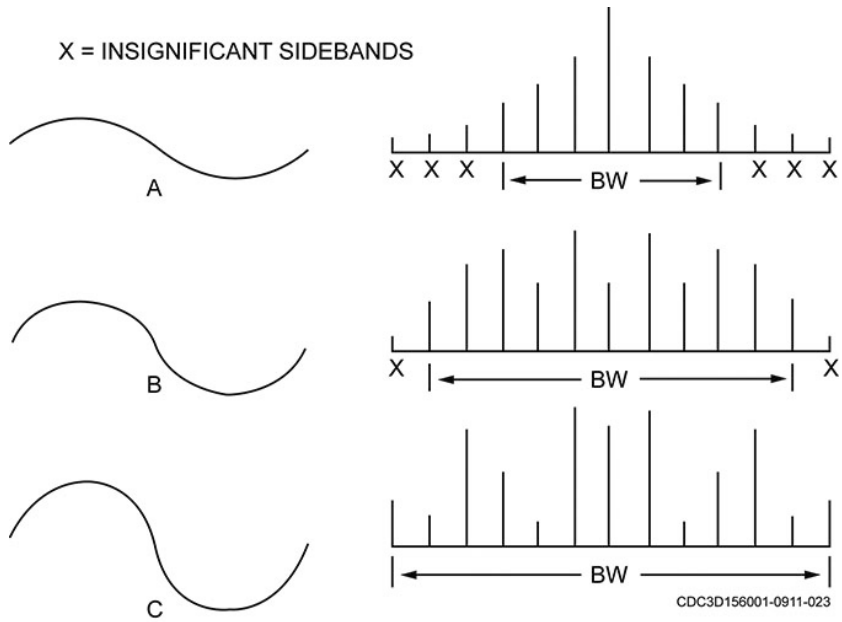

Figure 2–50. Effect of modulating signal on carrier frequency deviation.

In FM, the factors that determine the bandwidth are oscillator deviation and frequency of the modulating signal. What are the limits? The FCC has set up frequency assignments in such a way as to prevent interference from adjacent stations. Referring to figure 2–51, let us assume we have two stations transmitting near each other. Notice that carrier 1 has a frequency of 100 MHz and carrier 2 has a frequency of 100.2 MHz. Now, let us see why frequencies need assignment in this manner by expanding the range to show bandwidth power distribution. Remember, each station can deviate by 75 kHz above and below the carrier frequency. In addition, both stations have a 25 kHz guard band above and below the deviation bandwidth. Although these guard bands are a part of the station bandwidth, transmitter deviation should not take place within the guard bands. These are only for the existence of sidebands.

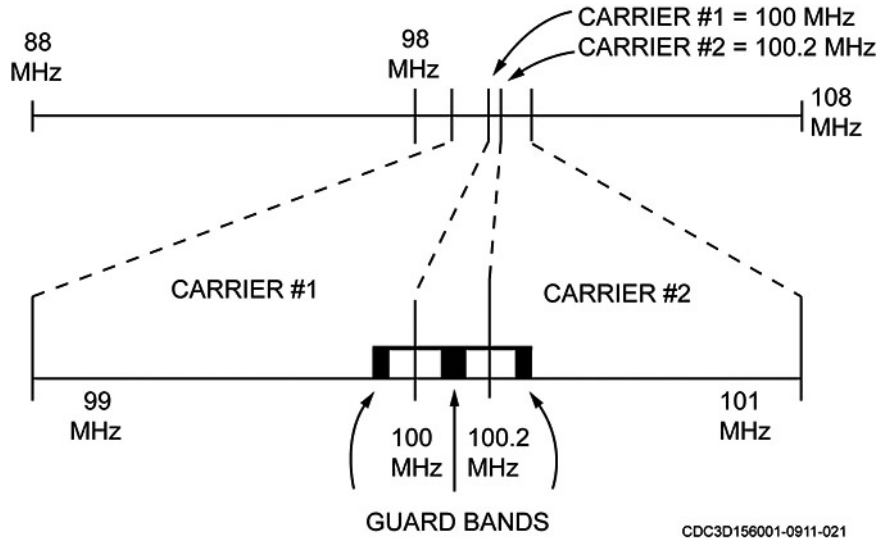

Figure 2–51. Use of transmitter guard bands to prevent adjacent station interference.

Now looking at figure 2–52 and expanding the diagram even further, we see the carrier and sideband distribution for each station. Notice some spillover of sidebands does occur into the guard band area of the adjacent station. This can happen so long as no sideband containing more than 1 percent of the

power spills over. Do not assume that the guard band for the adjacent channel is a part of the station bandwidth. Allowable transmitter swing is still 150 kHz (+/-75 kHz [above and below as stated earlier]). The guard band allows an actual bandwidth of 200 kHz. Some sidebands may extend over a 250 kHz area including adjacent station guard bands, and still not interfere with adjacent station transmission.

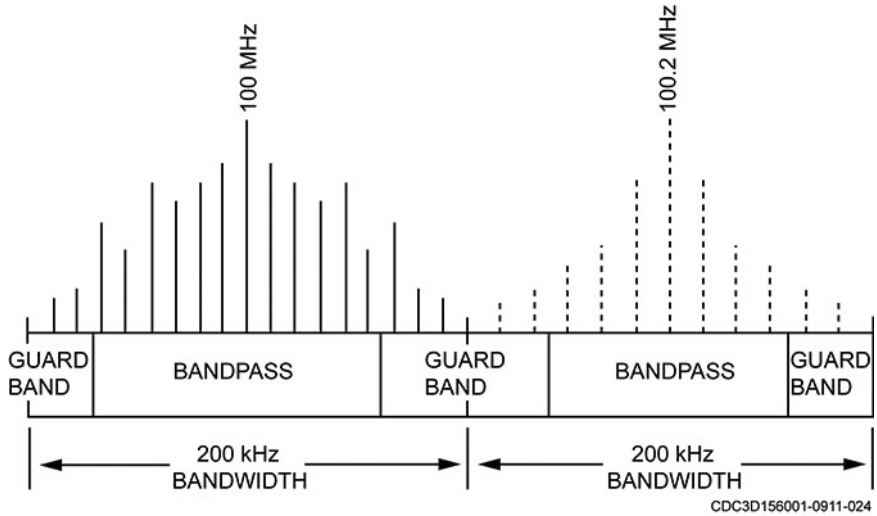

Figure 2–52. Station carrier and sideband distribution.

To develop a better understanding of frequency modulation, remember the following:

- Percent of modulation is arbitrary (actually, it is an imposed amount).
- FM produces an infinite number of sidebands.
- The spacing between sideband frequencies is equal to the frequency of the modulating signal.
- A significant sideband must contain at least 1 percent of the total transmitted power.
- Frequency deviation is the amount the transmitted frequency shifts away from the carrier frequency.
- The rate the transmitter varies above and below the carrier frequency is the frequency of the modulating signal.
- How much the transmitter frequency varies from the carrier frequency is a function of modulating signal amplitude.

Now that you have an understanding of FM modulation, you will learn about the final analog modulation type, phase modulation (PM). PM closely relates to FM and is often used for a variety of radio communications applications.

012. Phase modulation

Phase modulation is widely used, especially for data transmissions. As its name implies, PM uses the modulating signal to control the phase of the RF carrier signal, while the RF amplitude remains constant. One advantage of PM is high noise and interference rejection. This type of modulation is similar to FM, but in this case, the concern is the variation in phase rather than the change in frequency.

Phase modulation theory

The easiest and fastest way of understanding PM is by comparing it to FM. In FM, an oscillator's output varies above and below a carrier frequency. During this process, the peaks of each successive cycle in the modulated waveform occur at times other than in the unmodulated carrier. Therefore, an incidental phase shift takes place along with the frequency shift. In PM, just the opposite takes place.

Figure 2–53 shows that when an audio signal goes to a phase modulator, the resultant wave shifts in phase. When this happens, the time of the carrier changes for each successive cycle. Because frequency is a function of time per cycle, a phase shift in the carrier causes a frequency change. The frequency change in FM is vital but in PM it is merely incidental. The amount of frequency change has nothing to do with the resultant modulated wave shape.

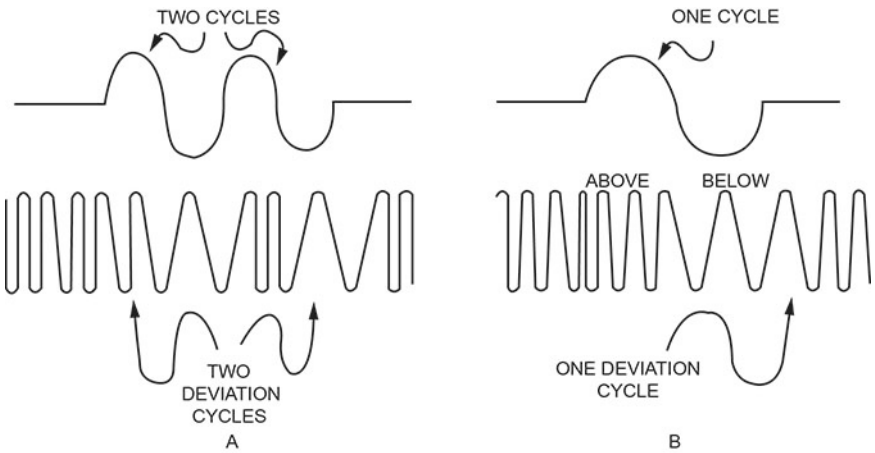

Figure 2–53. PM wave shift.

To get a better understanding of PM, you need to explore phase relationships.

Phase relationship

Look at figure 2–54 and compare the three voltages. Since voltage A begins its cycle and reaches its peak before voltage B, it is “leading” B. Voltage C “lags” voltage B. We use this principle to help us understand phase modulation.

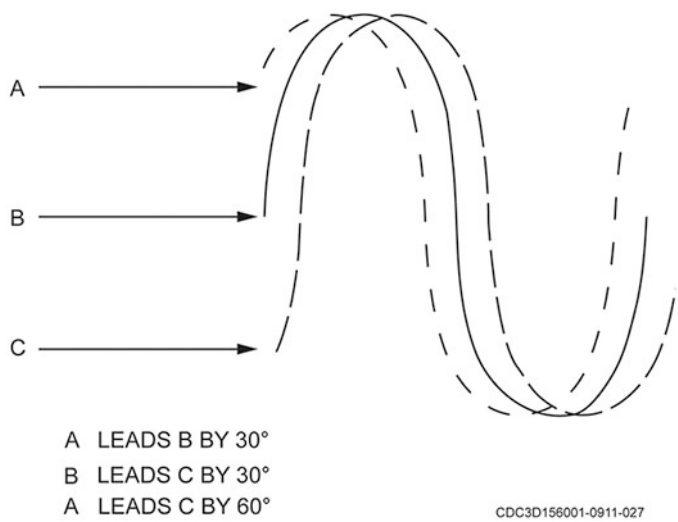

Figure 2–54. Phase relationships.

Figure 2–55 compares a phase-modulated carrier to an unmodulated carrier. The unmodulated carrier remains at a constant phase, amplitude, and frequency. Reading from left to right, the first two peaks of the modulated carrier start to lag behind the unmodulated carrier. On the third peak, the shift is even greater. On the fourth peak, they start coming back in phase with each other. This shows the effects of the positive part of a modulating signal. When the modulating signal is negative, the carrier’s phase starts leading and the peaks occur at times earlier than the unmodulated carrier does. In phase modulation, the carrier’s phase shifts at the rate of the modulating signal. The two diagrams are shown together to compare a modulated carrier to an unmodulated carrier.

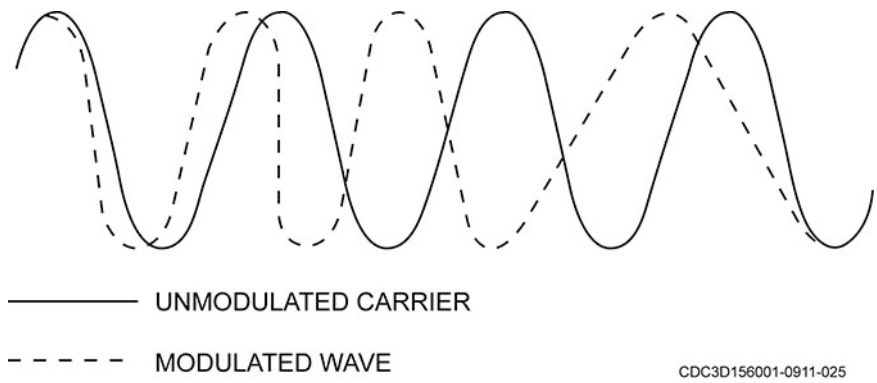

Figure 2–55. Comparison of a phase-modulated carrier to an unmodulated carrier.

Phase modulation versus frequency modulation

You have seen how the phase and frequency of a carrier shift in FM and PM. Now, let us see how they differ. First, only the phase shift is important in PM and it is proportional to the modulating signal. Refer to the wave shapes in figure 2–56 to see this principle. The FM carrier deviates when the modulating wave shape changes polarity (polarity amplitude determines the amount of frequency deviation). For each alternation, the carrier advances or retards in frequency and remains at the new frequency for the duration of the cycle. In PM, between one alternation and the next, the carrier's phase must change and the frequency shift occurs only during the transition time. Then the frequency returns to its normal rate. In the PM signal, a frequency shift occurs only when the modulating wave shape is changing polarity. The frequency during the constant amplitude part of each alternation is the *rest frequency*.

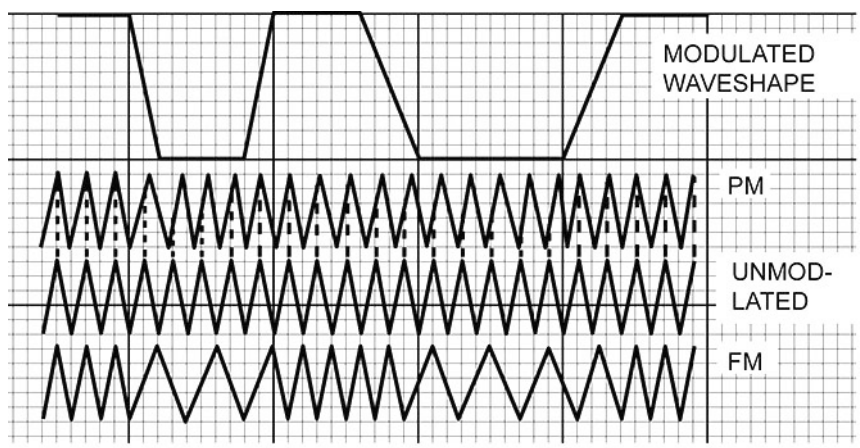

Figure 2–56. Differentiating PM and FM carrier signals.

The relationship of the modulating wave shape to the change in the phase shift in PM is easy to see. Understand and remember these two rules of phase modulation:

- Amount of phase shift is proportional to the amplitude of the modulating signal (i.e., if a 10 V signal causes a phase shift of 20 degrees, then a 20 V signal causes a phase shift of 40 degrees).
- Rate of phase shift is proportional to the frequency of the modulating signal (i.e., if the carrier was modulated with a 1 kHz tone, then the carrier would advance and retard, in-phase, 1000 times each second).

There are many different types of PM used today in digital wireless communications. The reason why so many exist is that different modulation techniques evolved as technology grew.

013. Space modulation

Space modulation is a radio AM technique used in instrument landing systems (ILS). The ILS incorporates the use of multiple antennas fed with various radio frequency powers to create different depths of modulation within various volumes of three-dimensional airspace. Because of this, it is commonly referred to as difference in the depth of modulation (DDM). This modulation method differs from internal modulation methods inside most other radio transmitters. In space modulation, the phases and powers of the two individual signals mix within airspace, rather than in a modulator. An aircraft with an on-board ILS receiver within the capture area of an ILS, (glide slope and localizer range), will detect varying depths of modulation according to the aircraft's position within that airspace. The depth of modulation provides accurate positional data about the progress to the threshold. This positional data is for both the horizontal (course) and vertical (glide slope) ILS planes, see figure 2–57.

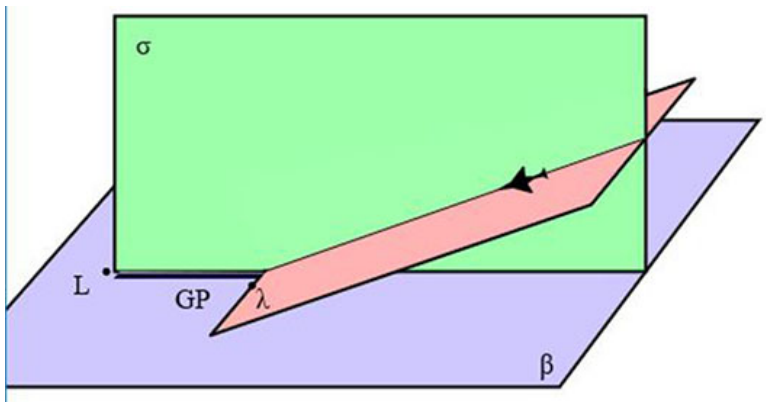

Figure 2–57. ILS planes.

Difference in the depth of modulation

DDM is a method used by the ILS in conjunction with the associated airborne receiving equipment to define a position in airspace. DDM is usually expressed in percentage, but may also be expressed in microamperes (µA). Instrument Landing system ground stations provide radio frequency signals that vary linearly in the depth of modulation from the center or course line at a rate of 0.145 percent per meter. The two individual audio modulation frequencies and their associated sidebands are 150Hz and 90Hz. The DDM for a localizer (LOC) at the outer extremity of the course sector is 15.5 percent, or an electric current equivalent of 150 µA half-scale deflection.

Localizer

In aviation, a LOC is the lateral component of the ILS for the runway centerline when combined with the vertical glide slope (GS). A LOC (like a GS) works as a cooperation between the transmitting airport runway and the receiving cockpit instruments to keep an aircraft on course down the centerline of the runway. An older aircraft without an ILS receiver cannot take advantage of any ILS facilities at any runway. More importantly, the most modern aircraft have no use of their ILS instruments at runways that lack ILS facilities. In parts of Africa and Asia, large airports may lack any kind of transmitting ILS system. Some runways have ILS only in one direction, this can however still be used (with a lower precision) known as back-beam or back-course, which is not associated with a GS.

Glide slope

A GS station uses an antenna array sited to one side of the runway touchdown zone. The GS signal is transmitted on a carrier signal using a technique similar to that for the LOC. The center of the GS signal is arranged to define a glide path of approximately 3 degrees above horizontal (ground level) and guide the aircraft down to the runway threshold. The beam is 1.4 degrees deep (0.7 degree below the glide path center and 0.7 degree above).

The pilot controls the aircraft so that the GS indicator remains centered on the display to ensure the aircraft is following the glide path (GP) to remain above obstructions and reach the runway at the proper touchdown point (i.e., it provides vertical guidance).

Principle of operation

The ILS uses two radio frequencies, one for each ground station (about 110 MHz for the LOC and 330 MHz for the GP), to transmit two amplitude-modulated signals (90 Hz and 150 Hz), along the GP and the LOC trajectories into airspace (fig. 2–58). This signal is projected up from the runway, which allows an aircraft employing an instrument approach to land.

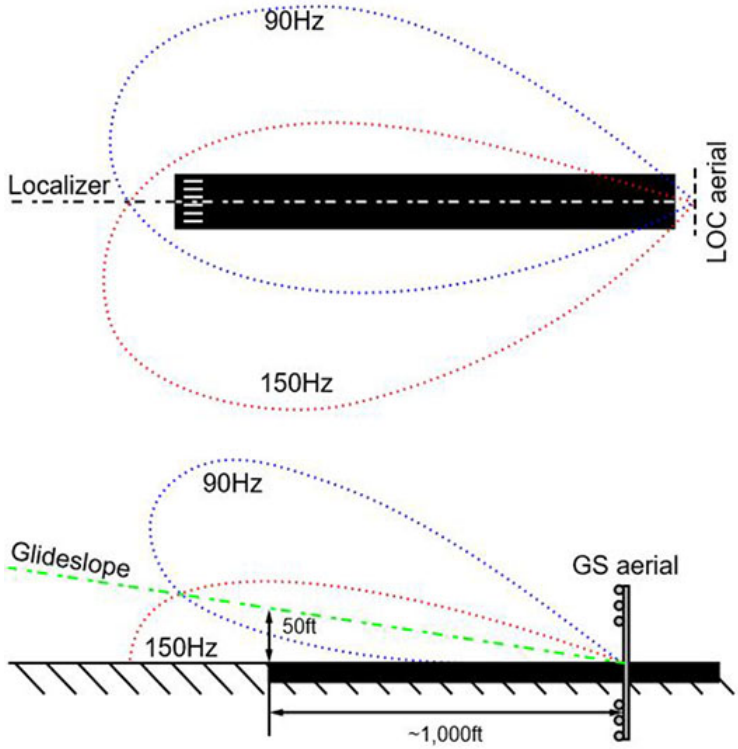

Figure 2–58. Emission patterns of the localizer and glide slope signals.

The purpose of the ILS is to guide the aircraft to touchdown on the threshold of the runway. The modulation depth of each 90 Hz and 150 Hz signal changes according to the deviation of the aircraft from the correct position. If the aircraft is too far right of the runway, the corresponding LOC signal will be detected stronger by the aircraft. This will move the indicator to inform the pilot that the aircraft is right of centerline and needs correction. Similarly, the difference between the two GS signal modulation depths is zero when the aircraft is on the correct glide path on approach to the runway. No difference (zero DDM), produces no deviation from the middle indication of the instrument's needle within the cockpit of the aircraft.

Carrier frequency pairings of localizer and glide slope

Two signals are transmitted on one of 40 ILS channels. One is modulated at 90 Hz, the other at 150 Hz. These are transmitted from co-located antennas. Each antenna transmits a narrow beam.

LOC carrier frequencies range between 108.10 MHz and 111.95 MHz (with the 100 kHz first decimal digit always odd, so 108.10, 108.15, 108.30, and so forth, are LOC frequencies and are not used for any other purpose). LOC and GS carrier frequencies are paired so that the navigation radio automatically tunes the GS frequency, which corresponds to the selected LOC frequency. The LOC signal is in the 110 MHz range while the G/S signal is in the 330 MHz range.

Cockpit instrumentation

Aircraft use an attitude indicator, more commonly known as the artificial horizon, to display ILS indications. The LOC is shown on the scale below the attitude gauge, and is in this case looking almost as a small white "^" sign. Both the indicator and its scale are small, see figure 2–59.

Figure 2–59. Attitude indicator.

The LOC indicator is shown below the attitude indicator. It is still a part of this instrument together with the GS indicator and the cross in the center of the instrument, which is called the flight director. The GS scale is located to the right of the attitude sphere. It is a yellow arrow displayed on a scale. If the arrow is above the middle line then the aircraft is above the GS.

On some older aircraft, the ILS was displayed on a separate indicator. It was displayed with two dangling bars, fixed in the middle of the top (LOC indicator) and in the middle of the left side (GS indicator). If the aircraft was located on the intended glide path, the dangling bars formed a cross. However, this is more difficult to learn and even for pilots experienced with using such indicators, it added another instrument they needed to focus on. With the indicators added to the artificial horizon (and to the compass), the pilot can theoretically watch the attitude simultaneously with the LOC and GS.

In modern cockpits, the LOC is displayed as a colored dot (usually in the shape of a diamond) at the bottom of the artificial horizon gauge. It does not appear during cruise, but comes up during the descent and approach to the selected runway, provided the navigation radio is set to the proper ILS frequency. If the aircraft is located on this line, the LOC dot will appear in the middle of the scale. However, if the aircraft is located a little left of the beam, the marker will appear to the right on the LOC gauge scale in cockpit. The pilot then knows he or she must adjust the heading towards the dot.

Self-Test Questions

After you complete these questions, you may check your answers at the end of the unit.

010. Amplitude modulation

1. What part of the AM signal *does not fluctuate* in amplitude by the modulating signal?

2. The amplitude modulated waveform contains what frequencies?

3. What part of the modulated carrier wave contains the information carrying component?

4. In AM, what is the relation between the bandwidth required to transmit the signal and the frequency of the modulating signal?

5. Define "percent of modulation."

6. Find the % mod if a 4 Vpk-pk RF signal is modulated by a 2.5 Vpk-pk audio signal.

7. If the signal in figure 2–3C, has an E_{max} of 50 mV_{rms} and an E_{min} of 5 mV_{rms}, what is its % mod?

8. What are two results of over modulation?

9. What is a disturbance generated by an external source that affects AM electrical circuits by electromagnetic induction, electrostatic coupling, or conduction?

011. Frequency modulation

1. How does the rate of deviation relate to the frequency of the modulating signal?

2. What determines the amount of deviation of a FM carrier?

3. To prevent interferences with other FM stations, what agency establishes limits on the maximum amount of deviation in FM?

4. What is a significant sideband?

5. How do you determine the *modulation index* in FM?

6. Where do FM sidebands get their power?

7. What is the relationship between modulation index and sideband power?

012. Phase modulation

1. In PM, what effect does the change in carrier frequency have?

2. Describe the effect the positive and negative alterations of a modulating signal have on the phase of the carrier in PM.

3. When is the carrier at its *rest frequency* in PM?

4. What part of the modulating signal controls the amount of phase shift in PM?

5. What part of the modulating signal controls the rate of phase shift?

013. Space modulation

1. Define space modulation.

2. What ILS component provides the lateral component to for the runway centerline?

3. What does the GS represent for the pilot?

4. When an aircraft is on the correct GS, what is the difference between the two modulation depths?

5. Where are ILS indications displayed in an aircraft?

2−3. Digital Communications

An analog signal must undergo analog-to-digital conversion for digital transmission. Digitization is the process of converting an analog signal into a digital signal. Digitization usually takes place in the multiplex equipment in a digital system. Some communication systems, particularly tactical voice systems, use another conversion technique called continuously variable slope delta modulation. We discuss these techniques and delta modulation in the following paragraphs.

Many data channels use digital signaling because computers use digital signals. However, today's technology allows both voice and data transmission by either analog or digital signaling. Also, most new telephone lines installed are digital.

Digital transmission offers advantages over analog transmission because digital is usually easier to reduce and clean up noise and errors during transmission, especially when sending messages over long distances. Another advantage is that digital transmission is compatible with digital computer systems. Thus, it is not necessary to convert data messages to and from analog to digital when computer systems use digital transmission channels.

014. Pulse code modulation

Pulse code modulation (PCM) is a complete digitization process. It converts an analog signal that is continuous in time and amplitude into one that is distinct in both time and amplitude (i.e., a true digital signal). The four steps in the PCM process are band-limiting, sampling, quantizing, and encoding (fig. 2–60).

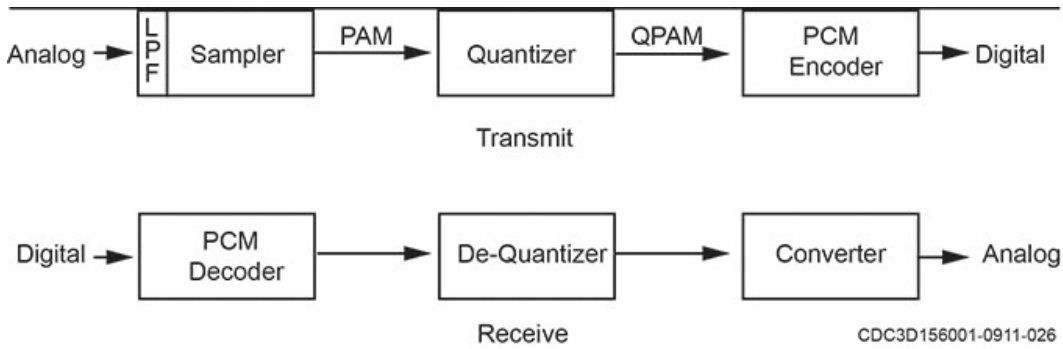

Figure 2–60. The PCM process.

In figure 2–60, you see that the process begins by band-limiting the analog input signal using a low-pass filter. The sampler processes the signal, changing it to a discrete (specific) time/continuous amplitude signal called pulses. The sampling pulses go to a quantizer that assigns discrete amplitudes to the pulses. The final step in the PCM process is encoding. In this step, it assigns a binary number code word to each sample corresponding to its amplitude. They go out as a series of pulses and empty intervals (during which no pulse is present). For convenience, the pulses are 1s and intervals are 0s. On the receive side, the 1s and 0s translate back into amplitude pulses to reconstruct the original waveform.

Band limiting

Band limiting in PCM establishes the highest and lowest frequency encoded. A 3 kHz filter limits the signal before it goes to the sampler. The primary function of the band-limiting filter is to ensure the input to the sampler never exceeds a maximum frequency; in this case about 3.5 kHz. This is important for the next step.

Sampling

Sampling is converting a continuous time signal into a discrete time signal. The basis for both PCM and continuously variable slope delta (CVSD) is signal sampling at regular intervals. A sample is a pulse that represents the amplitude of the signal at a particular time (fig. 2–61). In PCM, the input analog signal is directly sampled (hence the name direct PCM). CVSD samples a signal related to the input signal. We call these sampled pulses (shown in the figure) pulse amplitude modulation (PAM) samples. While we are on the subject of sampling, let us look at other methods of pulse modulation.

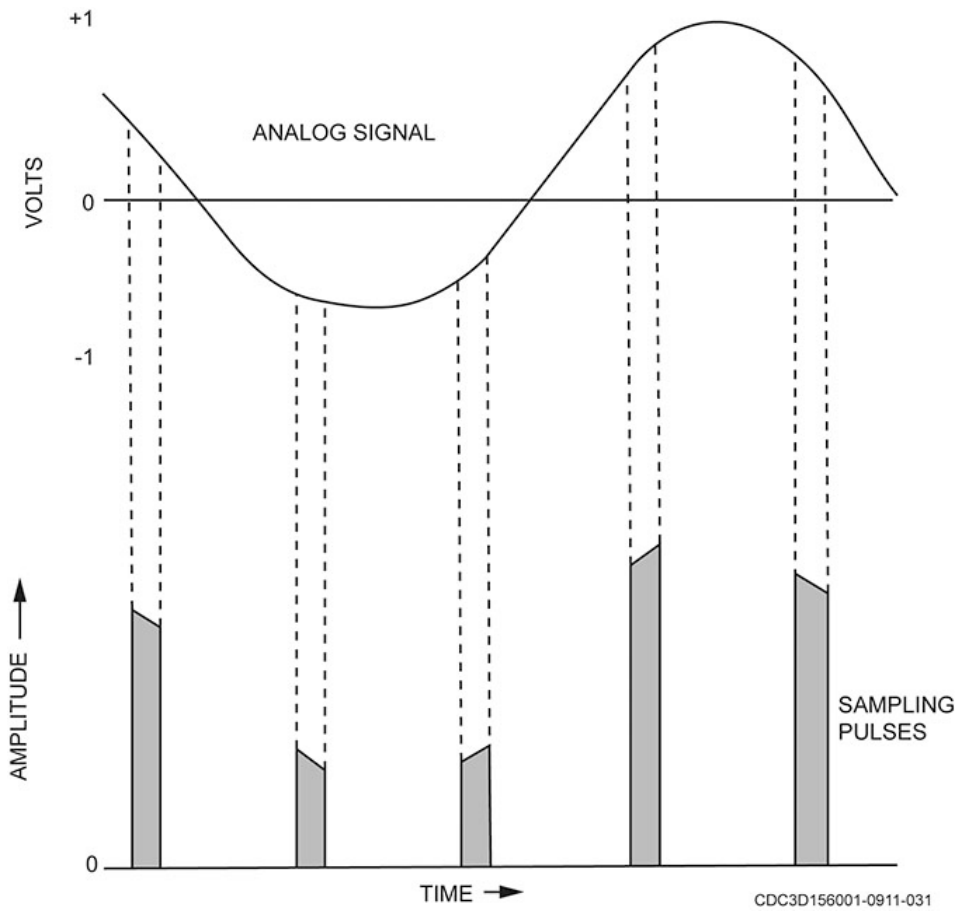

Figure 2–61. Sample pulse representing the amplitude of a signal.

Pulse modulation

Pulse modulation is the process of varying the pulses of a pulse train in some way to represent the analog input signal. If you compare pulse modulation to analog modulation, the pulse train would function as a carrier and the analog input signal would function as the modulating frequency. See figure 2–62 for the following definitions:

- PAM causes the amplitude of the pulse train to vary according to the amplitude of the input signal.
- Pulse width modulation (PWM), also known as pulse duration modulation, varies the width or duration of the pulses in the pulse train according to the amplitude of the input signal.
- Pulse position modulation (PPM) changes the position of the pulses in the pulse train according to the amplitude of the input signal.

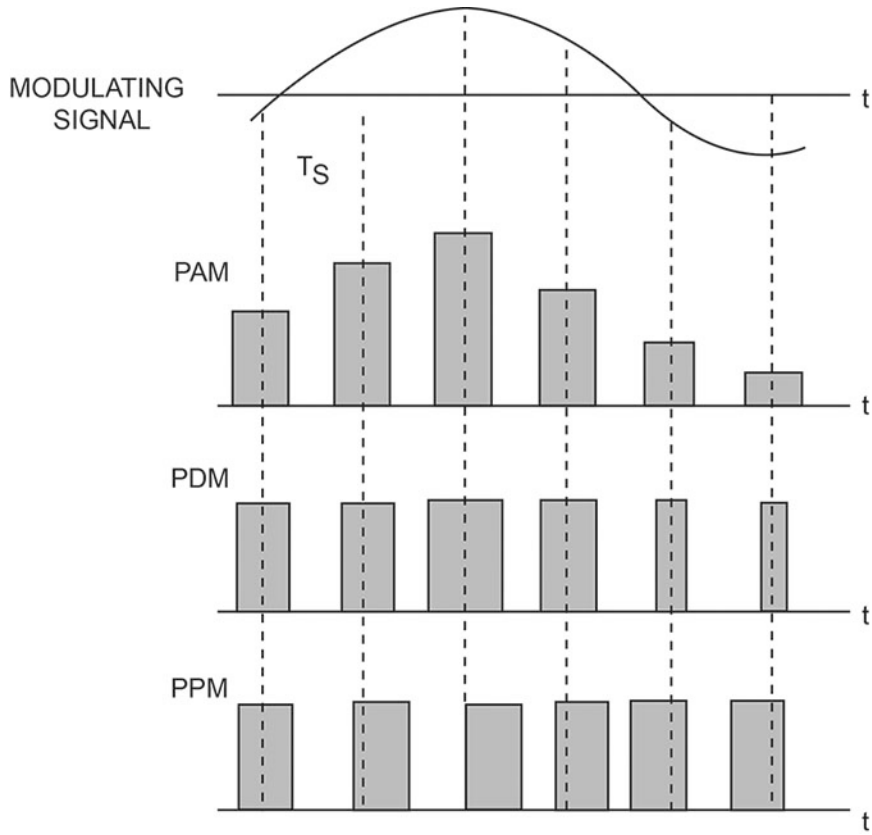

Figure 2–62. Pulse modulation.

Nyquist Sampling Theorem

You could construct the waveform of an analog signal by electrically combining a particular set of different sine waves. The importance of this idea lies in a characteristic of all sine waves. You can completely define a full cycle of a sine wave by any two points on the wave. So, if you frequently take regular samples, they will contain all the information of the original signals.

A distinguishing feature of analog signals is they are band limited. Frequencies of a sine wave fall within a limited portion of the frequency spectrum. The bandwidth determines the upper frequency limit of the sine waves that comprise an analog signal waveform. Sampling a sine wave at its highest frequency twice during a cycle completely defines it because you need a minimum of two samples to define a sine wave. At this rate of sampling, you sample every other component sine wave in the waveform more than twice per cycle, which is more than adequate to define it. You can also completely define a complex waveform by taking samples at twice the highest frequency in the band-limited signal. We call this rate the Nyquist sampling rate, named for H. Nyquist who did research on the analog-to-digital conversion process.

Quantization and encoding

Quantization and encoding steps work hand-in-hand, so we explain them together. Since an analog signal is a continuous signal, the number of amplitude values it contains is infinite. The limit to the number of values available for coding is the number of available values for transmit, which is a finite number. Consequently, a finite number of values replace an infinite number of amplitude values. To do this, we assign discrete amplitude values. All sampled amplitude values are rounded to the nearest assigned value. This process is quantization.

The final step is to code the quantized samples into a binary word. The general rule for binary coding is the formula $N = 2_H$ where “N” is the number of possible amplitude values to assign to binary

numbers and "H" is the number of bits in a word (usually seven or eight). For example, a 7-bit binary word, or 2_7, equals 128 possible amplitude values or quantum steps. This is the maximum number of steps allowed to define the amplitude of the analog signal. The number of steps available usually is not enough to accurately represent the analog signal; it is approximated or rounded off. Rounded off values are not true values (fig. 2–63). When compared to the original waveform, the reconstructed one from a quantized signal is distorted and resembles the stepped signal shown in the figure. This distortion shows up as noise and is called quantizing noise.

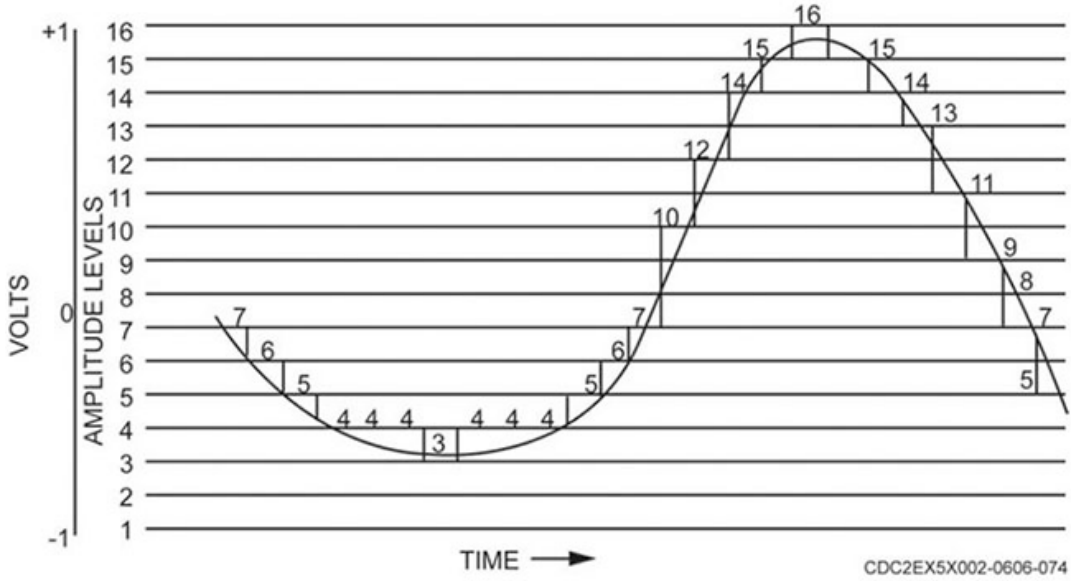

Figure 2–63. Rounded off values representing an analog signal.

Uniform quantizing

Quantizing can be either uniform or non-uniform. Quantizing is uniform when we define the coded amplitude values as steps of equal amplitude range, as in figure 2–64. Uniform quantization has drawbacks when applied to voice signals. In human speech, the lower amplitudes are prevalent, but the quantizing steps are the same size at the lower amplitudes as at the higher amplitudes. Therefore, most of the energy in a voice signal being concentrated at the lower amplitude levels is quantized into relatively few amplitude levels. The result is a high level of quantizing noise.

Non-uniform quantizing

The purpose of non-uniform quantizing is to provide more coded amplitude levels at the low signal levels and fewer at the high signal levels. This reduces quantizing noise from the range where most of the energy is located for voice signals. Figure 2–65 illustrates quantizing with non-uniform amplitude level spacing. The closest spaced levels are concentrated at the low-signal amplitude levels.

Companding

Companding is a process that compresses the high-amplitude parts of a signal before transmission, decreasing its dynamic range. On reception, it expands the range of the signal to its original values, restoring the dynamic range. Thus, you need fewer coded amplitude levels. Using a combination of non-uniform quantizing and companding, it is possible to decrease the code word from 11 to 7 bits and still achieve the same quality of the reproduced received signal.

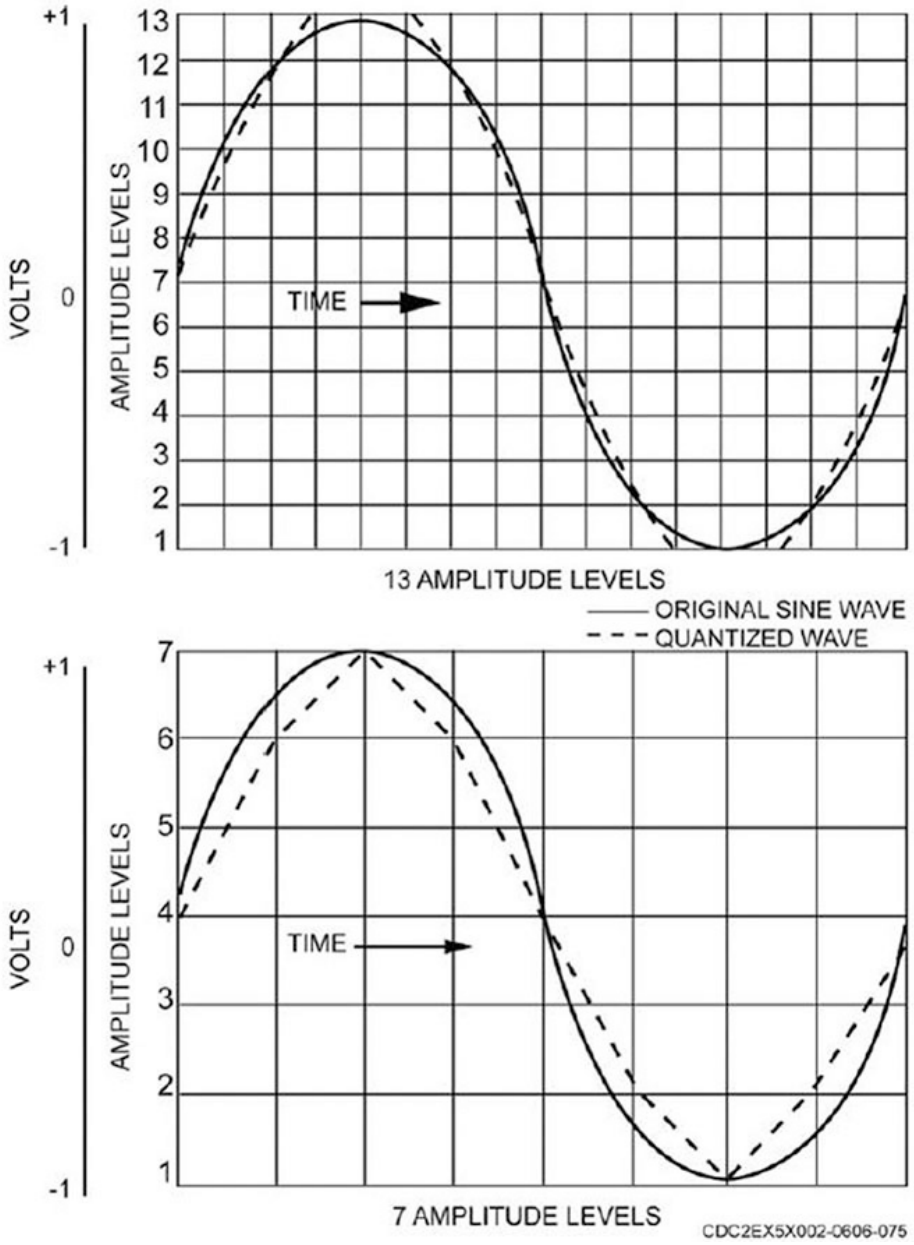

Figure 2–64. Uniform quantizing.

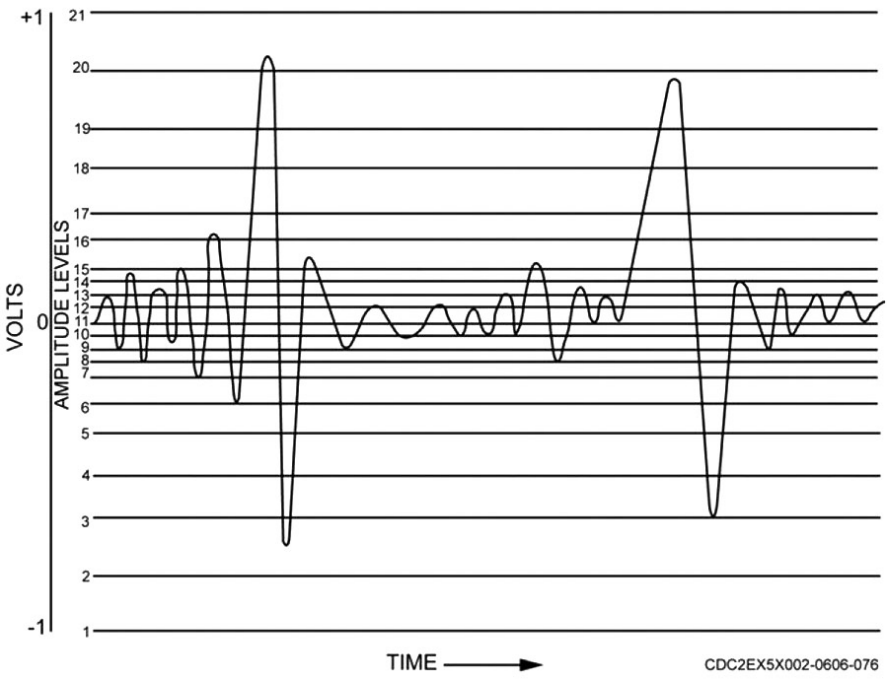

Figure 2–65. Non-uniform quantizing.

015. Transmission methods

You may select from a number of transmission modes and data codes for transmitting signals from a sending device to a receiving device. In fact, many networks use a variety of transmission modes and data codes for signaling. The majority of computers communicate with digital signals.

Digital signals are discrete “on” and “off” pulses of electricity that most computer systems use to create the bits that make up bytes, or characters. For example, a computer may create an “on” bit by placing a short positive signal of 5 V on a channel. Conversely, it may create an “off” bit by placing a short negative signal of 5 V on the channel. We call sending data with digital signals, digital transmission.

Asynchronous

In asynchronous transmission, each information character is individually synchronized, usually by the use of start and stop bits. Usually the STOP bits are the same polarity as the channel idle state (for example zero) and the start bits are of the opposite polarity (for example 1). Bandwidth is the range of frequencies that transmit over a given circuit. Frequencies are expressed in hertz (cycles per second). The type of media (cabling) and the method of transmission used can limit the frequency range.

Generally, the greater the bandwidth, the more information that can be sent through the circuit in a given amount of time. Asynchronous Transfer Mode (ATM) is viable for both local area networks and wide-area networks, and it supports many types of traffic including voice, data, facsimile, real-time video, compact-disk-quality audio, and imaging.

In asynchronous transmission, each character travels down a channel separately; that is, each transmission unit is only one character in length. The character heads with one or more start bits and ends with one or more stop bits. The start and stop bits tell the receiving device that a character is coming and that the character has been sent. The character usually contains a parity bit, used by the receiving device to verify that the transmission was received correctly. In a system using even parity, the number of 1 bits in all characters sent must equal an even number. The sending device places a 1 bit in the parity slot when it sends a character whose 1 bits do not add up to an even number.

The receiving device checks each character it receives by summing the 1 bits. If the character arrives with an even number of 1 bits, the device assumes that it has received a correct character. If the number of 1 bits is odd, the device assumes that an error at transmission has occurred. On the other hand, some systems verify transmissions using an odd-parity procedure. In that case, the example above is reversed.

Many terminals send messages asynchronously in American Standard Code for Information Interchange (ASCII) code (fig. 2–66); that is, they send messages by transmitting a series of separate, single characters composed of these elements:

- A start bit.
- Eight bits that represent an ASCII-coded character.
- A parity bit.
- A stop bit.

This means that to send one character, the terminal actually must send a total of 11 bits. Thus, the overhead to send a character is 27 percent of the total bits sent or 3 bits out of 11. This means that 27 percent of the transmission costs paid to the common carrier are for non-message bits.

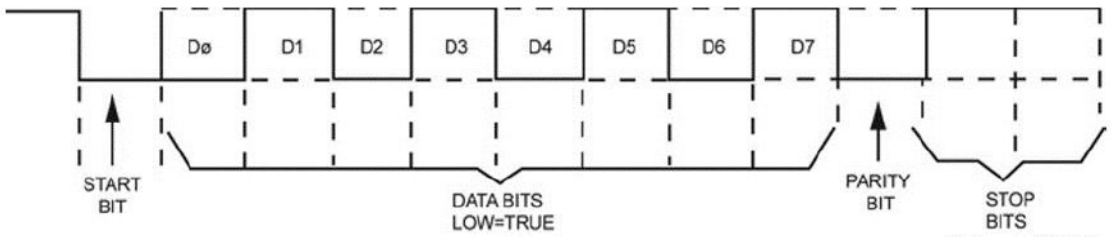

Figure 2–66. Message format.

Asynchronous transmission does have some advantages. Each individual character is complete in itself; therefore, if a character corrupts during transmission, its successor and predecessor are unaffected. Asynchronous transmission is particularly suited for applications where the characters will generate at irregular intervals, such as data entry from a keyboard. There are also some serious disadvantages.

For successful transmission using asynchronous transmission, the receiver must accurately recognize the start bits. Line interference may inadvertently send a false start bit to the receiver or the receiver may just miss a start bit. In addition, as we said earlier, 27 percent of sent bits of data are for control purposes and carry no useful information. Lastly, because of line distortion, the speed of transmission is limited.

Synchronous

To reduce the overhead costs of data transmission (the 27 percent control bits we discussed under asynchronous transmission), some networks send messages using synchronous transmission. Unlike asynchronous, synchronous transmission blocks many characters together for transmission. It is important to note that there is no control information associated with the INDIVIDUAL characters. Instead, the characters group together in blocks of some fixed size and one or more special synchronization characters recognized by the receiver precede each transmitted block. These bits identify as SYNC for synchronization. They precede the message block so the receiving device knows what is coming and can prepare for the message.

Several bits also follow the block so the receiving device can verify what it received. However, the beginning and ending bits are a small percentage of the total number of message bits sent. Synchronous transmission reduces the overhead costs of communications and is not as prone to distortion so it can handle much higher transmission speeds.

There are a few disadvantages to synchronous transmission. For one, the cost of synchronous equipment is usually higher than that of asynchronous equipment. If an error should occur, an entire block of data (possibly 100 characters or more) is lost rather than just one character, and the sender cannot transmit characters simply as they occur and consequently has to store them until it has built up a complete block—thus the system is unsuitable for applications where characters generate at irregular intervals.

Isochronous

Isochronous (pronounced "eye-SAH-krun-us") data transfer combines the features of an asynchronous and synchronous data transfer system. An isochronous data transfer system sends blocks of data asynchronously, in other words the data stream can be transferred at random intervals.

Each transmission begins with a start bit to signal the beginning of transmission. Once the start bit is received, the data stream must be delivered with a guaranteed bandwidth. Isochronous data transfer, commonly used for steaming video, must receive data within certain time constraints.

Isochronous systems do not have an error detection system. If an error were detected, time constraints would make it impossible to resend the data.

Multiplexing

In most radio-telemetry applications, it is necessary to transmit more than one channel of information simultaneously. It is usually impractical and inefficient to use a separate radio line for each channel. Two important reasons for this are antenna complications and saving space, weight, and power which usually can be realized by transmitting a number of channels simultaneously over a single radio link. The process of transmitting more than one channel of information over a single line is referred to as multiplexing. Multiplexing has long been a standard practice in the communication industry. When more than one channel is multiplexed onto a carrier, a new form of noise is introduced in addition to the noise already inherent in the transmission line. This noise is crosstalk between the channels. Crosstalk often puts an upper limit on the number of channels that can be multiplexed onto a carrier.

Time-division multiplexing

In time-division multiplexing, a portion of time is allotted to each channel using a cyclic sequence. A commutator samples the information in each channel in cyclic serial sequence, and a modulated pulse is generated for each channel. These modulated pulses are fed to the radio transmitter where they modulate a radio carrier. At the receiving end, the modulated pulses are handled in a variety of ways. One method of operation is when the pulses are fed to a commutator, which is synchronized with the transmitter commutator. The output of each channel in the receiver commutator contains the modulated pulses from the corresponding channel at the transmitter. These pulses are integrated and interpolated by passage through a low-pass filter and then displayed and/or recorded. In some equipment, the output of the receiver is first recorded and then later played back into a synchronized commutator, or the channels are selected by hand by inspection of the record.

Wave-division multiplexing

Wave-division multiplexing (WDM) is a technology or technique modulating numerous data streams, such as optical carrier signals of varying wavelengths (colors) of laser light, onto a single optical fiber. WDM enables bidirectional communication as well as multiplication of signal capacity.

WDM is actually frequency division multiplexing (FDM) but referencing the wavelength of light as opposed to the frequency of light. However, since wavelength and frequency have an inverse relationship (shorter wavelength means higher frequency), the WDM and FDM terms actually describe the same technology – light in optical cable used to carry data and communication signals.

Coarse wave division multiplexing

Coarse wave division multiplexing (CWDM) contains fewer than eight active wavelengths per fiber. CWDM is defined by wavelengths. It is for short-range communications, so it employs wide-range frequencies with wavelengths spread apart. Standardized channel spacing permits room for wavelength drift as lasers heat up and cool down during operation. CWDM is a compact and cost-effective option when spectral efficiency is not an important requirement.

Dense wave division multiplexing

Dense wave division multiplexing (DWDM) is defined in terms of frequencies. Its tighter wavelength spacing fits more channels onto a single fiber, but costs more to implement and operate. DWDM is for systems with more than eight active wavelengths per fiber. It divides the spectrum finely, fitting 40-plus channels into the same frequency range used for two CWDM channels. DWDM is designed for long-haul transmission, with wavelengths packed together tightly. These systems must use precision lasers that operate at a constant temperature to keep channels on target.

016. Bit count integrity

As we mentioned earlier, digital data is comprised of 1s and 0s, called bits. Errors, or noise, in electronic transmissions or circuits is unavoidable and can disrupt the data. In order to know if the data has been corrupted it is important to maintain bit count integrity. Bit count integrity means that the number of bits transmitted is the same as the number of bits received. This is the main indicator that your data is error free. In order to ensure bit count integrity, a number of error detection and correction techniques are used. In this lesson, you will learn about some of these techniques.

Error detection techniques

Error detection is an important measure in providing reliable communication. Errors inevitably slip through, but by using certain techniques, we can identify them nearly every time. Establish error detection by using one of four methods: vertical redundancy check (VRC), longitudinal redundancy check (LRC), checksum, and cyclic redundancy check (CRC). We explain each in the following paragraphs.

Vertical redundancy check

As each incoming character is received, VRC checks it for odd or even parity. Odd parity means that there is always an odd number of “1” bits in the bit pattern for each character. Even parity indicates an even number of ones. Outgoing characters are checked before transmission for the bit parity count. For example, if you are using odd parity and the count is even, the transmitter inserts a “1” bit in the parity bit position to make the count odd. Thus, all characters transmitted have an odd bit count. A receiver detects an error when a character contains an even number of “1” bits.

Longitudinal redundancy check

Where VRC checks characters for odd parity, LRC checks an entire horizontal line within a block for odd or even parity. The count performs at both the transmitter and receiver. Doing this method in addition to VRC improves error control.

The receiver checks the block horizontally and vertically and creates its own block check character (BCC) and compares it with the transmitter’s BCC count. When they are equal, the previous block was error-free. When they are unequal, the receiver requests a retransmission of the previous block. VRC/LRC is only available with the ASCII character set. VRC when combined with LRC is about 98 percent effective.

Checksum

If the system is using extended ASCII code, there is no parity bit to use for error control. The extra bit is part of the code. This led to the development of another error detection method called checksum.

This method stacks characters one on top of the other and adds just like any addition problem. The binary number 255 divides the answer. Now the transmitter does something that may seem a little strange. After doing all of this division, it disregards the answer. However, it keeps the remainder that then becomes the checksum.

Cyclic redundancy check

The CRC treats the binary ones and zeros in the frame address, control, and information fields as a single long binary number. The CRC uses that number as a dividend in a division problem. The dividend divides by the binary divisor represented by a standard binary sequence. This digital operation results in a binary quotient and a remainder; which, because of the size of the divisor, may contain up to 16 bits.

This division process takes place in the transmitter at the sending end of the link. The 16-bit remainder attaches to the frame (packet) as the frame sequence check. When the frame arrives at the distant end, the BCC divides by the same divisor used by the transmitting end. The remainder is computed and the receiver compares it to the BCC received with the data over the link. If they are the same, the receiver presumes the data is correct. If they differ in any bit, the receiver assumes there was a transmission error and asks the transmitter to repeat the frame (packet) containing the error.

CRC is more effective than parity or checksum for a data block greater than 512 characters. It applies to either the hardware or software and is about 99 percent effective in most applications.

Error correction techniques

Once an error is detected in a frame, there must be a method for correcting it. There are two methods available for resolving frame errors: automatic retransmit on request (ARQ) and forward error control (FEC).

Error Correction Techniques	
Type	**Description**
Automatic retransmit on request	The receiver automatically sends a retransmitted request to the sender if it finds an error in a received frame. This is the most common method.
Forward error control	This error correction method relies on the receiving end to correct the errors. Forward error control relies on the transmitter to send multiple copies of the same message to the distant end. The intent is for the receiver to compare all the copies and then reconstruct a message by using the good portions of the message copies received. FEC is for one-way broadcast circuits or circuits with extremely high error rates. It is not nearly as efficient as ARQ when the line has a low error rate. It is also expensive, since FEC requires storage and processing equipment to analyze all the message copies for comparison.

Self-Test Questions

After you complete these questions, you may check your answers at the end of the unit.

014. Pulse code modulation

1. Name the four steps of PCM.

2. State the main purpose of the band-limiting filter.

3. Define sampling.

4. What part of the pulse train is varied using PAM, PWM, and PPM?

015. Transmission methods

1. With ATM, what is the length of each transmission unit?

2. What part of ATM transmission tells the receiving device that a character is coming and that the character has been sent?

3. How does the receiving device determine whether it has received a correct character?

4. What is an advantage of synchronous transmission over asynchronous transmission?

5. How does synchronous transmission differ from asynchronous transmission?

6. Describe isochronous data transfer.

7. What is isochronous data transfer commonly used for?

8. Define multiplexing.

9. What type of multiplexing separates each channel using a cyclic sequence?

10. What technology uses different colors of light to combine multiple data streams?

016. Bit count integrity

1. What does VRC check each incoming character for?

2. In LRC, what transmitted character does the receiver use to determine if a transmission was error-free?

3. When using the checksum method of error detection, what binary number is used to divide the sum of all the characters in order to derive the checksum?

4. How does the CRC method of error detection determine the dividend when computing the BCC?

5. How effective is CRC at detecting errors in most applications?

6. How does ARQ work?

7. When using forward error control, at which end of the transmission link are errors corrected?

8. What is the transmitter's function in error correction when using forward error control?

9. When using forward error control, what is the receiver's function in error correction?

2–4. Light wave Communications

Many scientists through the years have investigated the properties of light and sought to harness its potential. John Tyndall demonstrated around 1870 that light rays could be propagated through a jet of water by reflecting from its boundaries, thus proving the theory of total internal reflection. Alexander Graham Bell patented the photophone in 1880, which carried speech from a transmitter to a receiver using unguided modulated sunlight. A better carrier source was found when Ted Namon demonstrated the LASER in the 1960s, and the race was on for a transmission medium. In 1970, Corning Glass Works produced the first 20 decibel-per-kilometer (dB/km) fiber. Thanks to the efforts of these and many other inventors, fiber optic technology has exploded into many aspects of our lives. Let's begin by looking at where and why we use fiber optics (FO).

017. Fiber optics overview

Perhaps no discovery of the past century has had more of an impact on light wave communications than FO. In this section, you will learn FO applications, advantages and disadvantages, and some safety concerns when using fiber.

Applications

FO technology transmits light inside a thin, flexible glass or plastic fiber. Today, a transmission link connecting two electronic devices or circuits is the most commonly used FO technology (fig. 2–67). The FO link changes an electrical signal into light, sends/transmits the light through the fiber, and then changes the light back into an electrical signal.

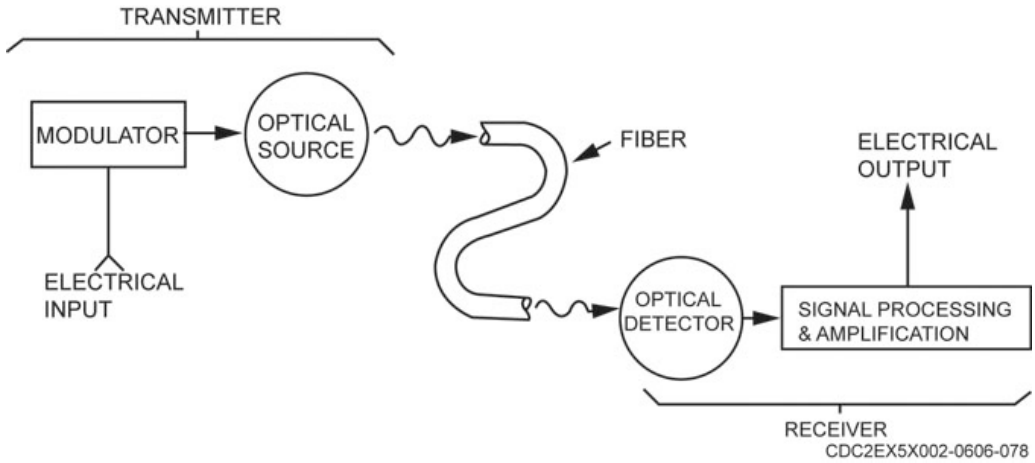

Figure 2–67. Basic fiber optic system.

The military is heavily involved with fiber optics. All possible modes of transmission, including voice, video, data, and sensors are being explored. Areas where you may see FO used include interconnect facilities, radar remoting, aircraft and shipboard control, surveillance systems, base and tactical communications, and weapons instrumentation. To understand why the military is so interested in fiber optics, let's look at some of the advantages offered.

Advantages

By studying the advantages that fiber optic cables have over copper cables, you should gain a better perspective on some of the main issues concerning this new technology.

Advantages of Using Fiber Optics	
Advantage	**Explanation**
High Bandwidth	The information-carrying capacity (bandwidth) of a carrier wave increases with the frequency. The carrier wave for fiber-optic signals is light; the frequencies are several orders of magnitude higher than the highest radio frequencies. A single fiber cable can handle thousands of two-way conversations. In comparison, the more common twisted pairs carry less than a hundred conversations.
Low Attenuation	As a signal travels from point to point, it loses power or becomes attenuated. Optical fibers have less attenuation (power loss) than metallic cables. More important, attenuation in a fiber does not increase with signaling frequency as It does in metallic cables.

Advantages of Using Fiber Optics	
Advantage	**Explanation**
Electromagnetic Immunity	Electromagnetic interference is unwanted energy given off by electronic circuits and picked up by other circuits. Undoubtedly, you have experienced crackling noises while you talked on the telephone. These noises are often caused by EMI and are even more devastating to data moving through the system. Since fiber optic cable does not radiate or absorb energy through its outer jacket, it is immune to this type of interference. Several fiber optic cables may be placed parallel to each other and even in the same enclosure without the signal from one cable affecting the signals in the others. This is because the fibers in fiber optic cables are made of a dielectric material (glass or plastic).
Small Size	Fiber optic cables are considerably smaller than metallic cable. This is a big advantage in areas where space is at a premium—like overcrowded conduit systems. Overall, the small size of fiber cables leads to simplified installation and maintenance, making it very suitable for portable use. Figure 2–68 shows a small fiber cable, with a single fiber, that has the same capability as a 900- pair metallic cable; therefore, making it possible to use smaller conduits for fiber optic cable or to increase the capacity of existing conduit.
Light Weight	Glass weighs considerably less than copper. This weight saving can be significant since a single fiber can replace several copper cables and is easier to install.
Safety	The dielectric properties of fiber isolate it electrically. Fiber presents no spark hazard and offers no noise problems due to ground loops.
Security	It is virtually impossible to tap a fiber optic cable unnoticed because the light carrying part of the core is so affected by the tap that it is easily detected. Since fiber does not radiate energy, other eavesdropping techniques are useless.

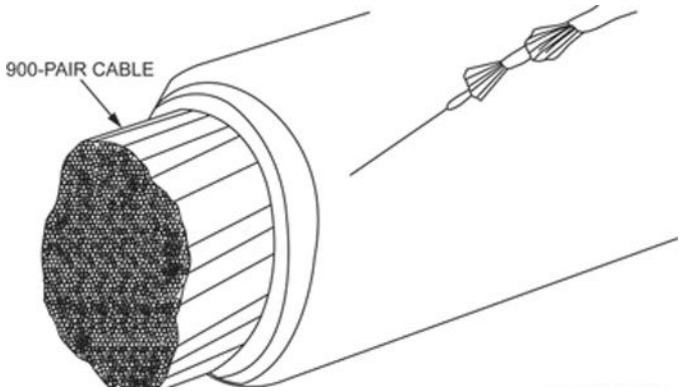

Figure 2–68. Single fiber vs. 900-pair cable.

Disadvantages

There are a several disadvantages to FO, but these disadvantages are due mainly to the fact that FO is still a developing technology and should decrease with time.

Disadvantages of Using Fiber Optics	
Disadvantages	**Explanation**
Standards	The lack of standards in both product specification and in testing procedures can make comparison of various products difficult.
Cost	Material and installation costs are still high in some applications.
Nuclear Effects	Large doses of nuclear radiation can darken the optical fiber and cause signal loss by blocking the light.

Safety precautions

The introduction of fiber optics into the Air Force introduced new health hazards and safety warnings. DO NOT look into a laser beam because you can cause severe eye injury or blindness. The best advice is to never look into a fiber end unless you have personally checked and made sure it is not connected to any equipment. Always wear goggles when working with the fibers to protect against flying fragments of silica, especially if you clean the fibers. These fibers can be very small, measuring micrometers (µm) in most cases. Once the fiber has penetrated your body, it cannot be seen without an ultraviolet light.

018. Elements of fiber optic cables

The fiber optic cable used today is a transmission link connecting two electronic devices or circuits. It is actually a dielectric waveguide supporting a discrete number of propagating modes. This fiber guide consists of three components: core, cladding, and protective coating (buffer). Figure 2–69 illustrates the parts of a typical fiber.

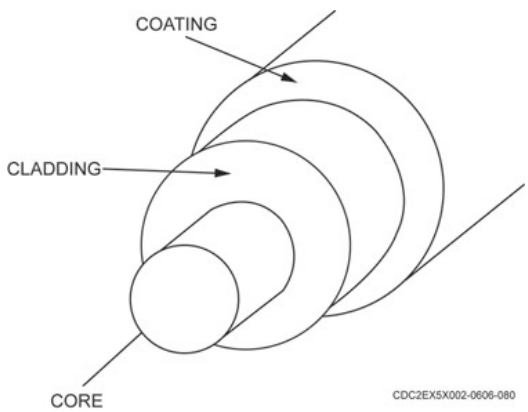

Figure 2–69. Parts of a typical optical fiber.

Core

The core is the optical transmission path. The light should remain in the core and travel through the fiber to the receiving end. It is often made from a solid section of ultra-pure, ultra-transparent silicon dioxide or fused quartz (glass), but may also be made of plastic. The core diameter may range from around 2 µm for the smallest single-mode glass fibers to 100 µm for large multimode glass fibers and larger for all-plastic fibers.

Cladding

The cladding surrounds the core that provides the reflective surface. This allows light to propagate along the core to the distant end. The cladding is also a solid section of transparent glass or plastic, but a significant decrease in density at the core-to-cladding interface helps keep light loss to a minimum. The cladding diameter of most glass fibers is 125 µm, but can be as large as 140 µm.

The surface where the core meets the cladding must be very smooth in order to achieve regular reflection. Otherwise, the light will scatter when it strikes the surface. In order to minimize signal loss the core material must be denser than the cladding material.

Protective coating

There are three major types of buffering designs: a tight buffer tube, a loose tube, and a ribbon. We only discuss the tight-tube and loose-tube jackets (fig. 2–70). The tight-tube fiber offers the advantage of smaller bend radii and better crush resistance than a loose-tube fiber. In most cases, this type of cable is installed indoors. Tight buffer is a soft plastic coating on the fiber (fig. 2–70B). Tight buffer diameters are typically 900 µm.

Figure 2–70. Optical fibers in loose and tight buffer tubes.

A loose-tube buffer (fig. 2–70A) is typically used outdoors. Optical fibers are usually coated with a thin layer of acrylate (250 μm diameter) and then several fibers are placed in a hard plastic tube with an inside diameter several times larger than the diameter of the fiber. This buffer can eliminate microbends caused by a tight jacket. The fiber is coiled loosely in the buffer tube and the tube is sometimes filled with moisture-barrier compound. This type of buffer allows the cable to be twisted, pulled, and otherwise stressed with little strain on the fiber. Further, microbends caused by temperature changes in fiber cables are virtually eliminated by using loose-tube fibers. However, loose-tube fibers increase the possibility of buckling and exceeding the fiber's minimum bend radius; thus, increasing attenuation loss.

019. Principles of light wave propagation

Now that we have examined the parts of fiber optic cables, let's look at the basic light wave communications principles.

Light waves (Photons)

Light is electromagnetic radiation in the wavelength range from 10_{-5} micron to 10_3 microns, including infrared, visible, ultraviolet, and x-rays. While all forms of light are electromagnetic radiation, not all electromagnetic radiation is light.

Photons travel through space at about 186,000 miles per second. In comparison, the Sun is about 93,000,000 miles away, so it takes the light from the Sun a little over 8 minutes to reach the Earth. Energy possessed by the photon determines the frequency of the wave. As you know, frequency is measured in hertz.

Like radio waves, x-rays, and radar, a photon particle is energy and is part of the electromagnetic spectrum (fig. 2–71). You can see in the illustration that the frequency of light is several orders of magnitude above the highest radio frequencies and that visible light is only a small part of the entire range. Visible light ranges from 400 nanometers (nm) for deep violet to 750 nm for deep red. Most fiber optic links use infrared light, which is the range from 750 to 1500 nm.

Light as part of this electromagnetic field can be depicted as a sine wave. A wavelength is the distance a wave travels during a complete cycle and involves two factors: speed and frequency. The frequency of a repeating waveform is the number of complete cycles in a certain time, usually one second, or the number of waves that pass a fixed point in one second. This wavelength is measured in nanometers, or billionths of a meter. To give you an idea of the size of a nanometer, the period at the end of this sentence has a diameter of about one million nanometers.

Refractive index

The refractive index, represented by the symbol n_x, is the ratio of the speed of light in a vacuum to its speed in a material (medium). The refractive index of air is 1.00; water is 1.33; glass is 1.50; and, silicon is 3.40.

As you can see, the density of the medium determines the refractive index in which light travels. This is important during fiber optics manufacture because the specific compound of glass can alter its refractive index.

Refraction

Refraction happens when light bends as it passes from one transparent material into another transparent material of different densities. This occurs because light travels at different speeds through different materials (because they have different refractive indexes). Not only does light travel at a different speed in different media, different wavelengths (colors) travel at different speeds in the same medium. Note that each color in the prism in figure 2–72 is refracted differently because of the different speeds at which each wavelength travels through the prism.

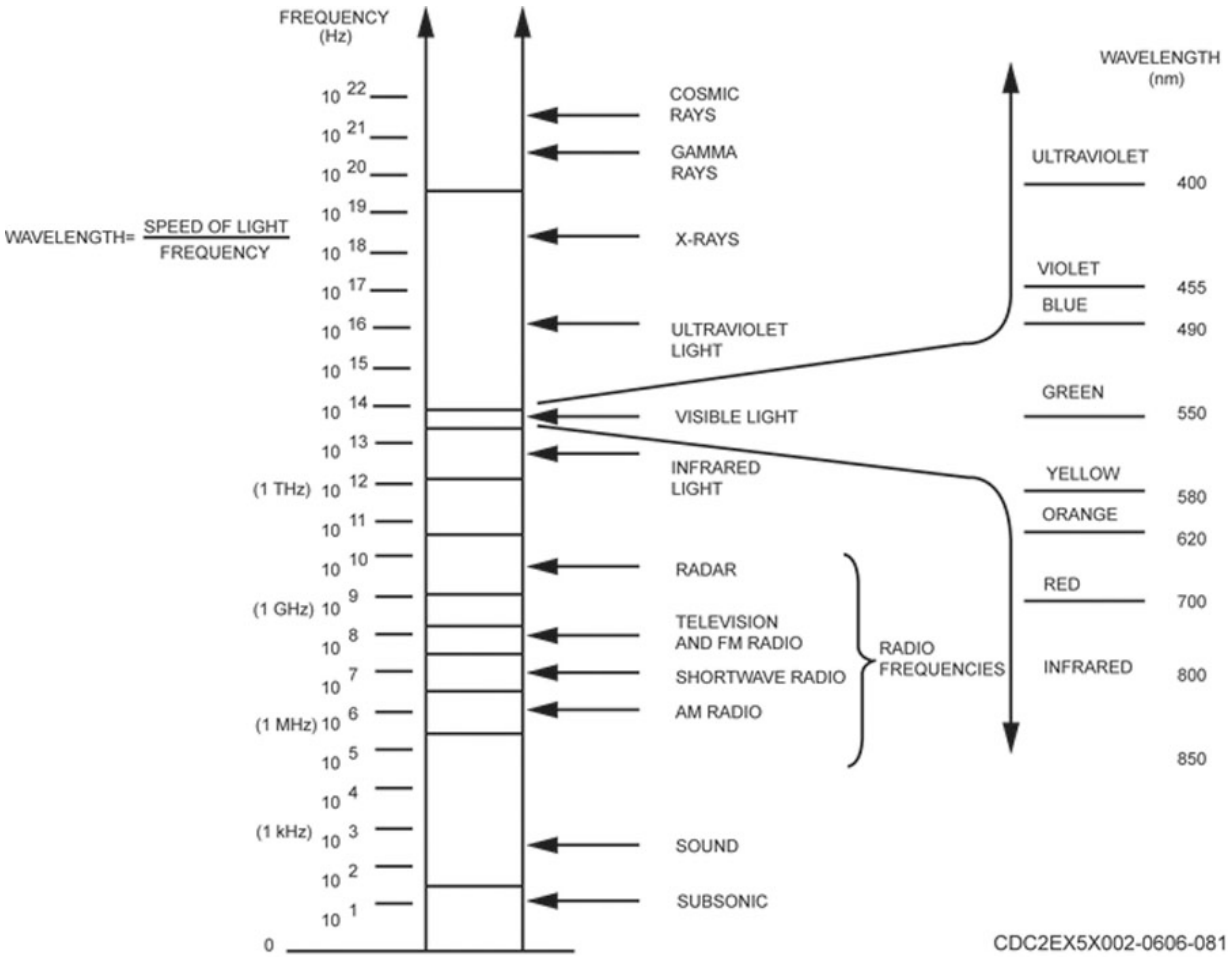

Figure 2–71. Electromagnetic spectrum.

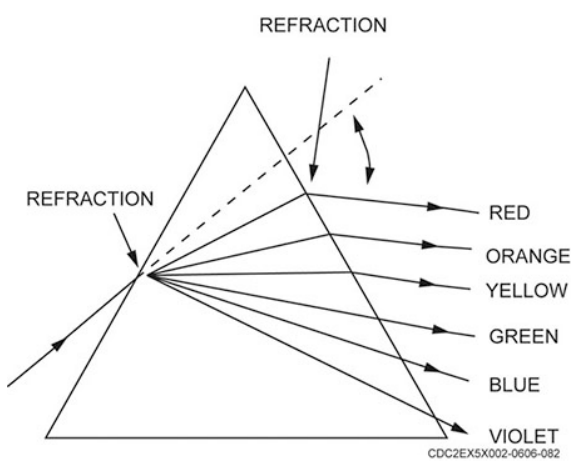

Figure 2–72. Refraction in a prism.

Reflection

Reflection occurs when light bounces back from an object. A smooth surface like a mirror gives regular reflection, which means that it reflects a whole beam of light together. A rough surface would give diffuse reflection, which means that it scatters the beam of light in different directions (fig. 2–73). It is important for the fiber to have a very smooth surface to give the best reflection of signals traveling through it.

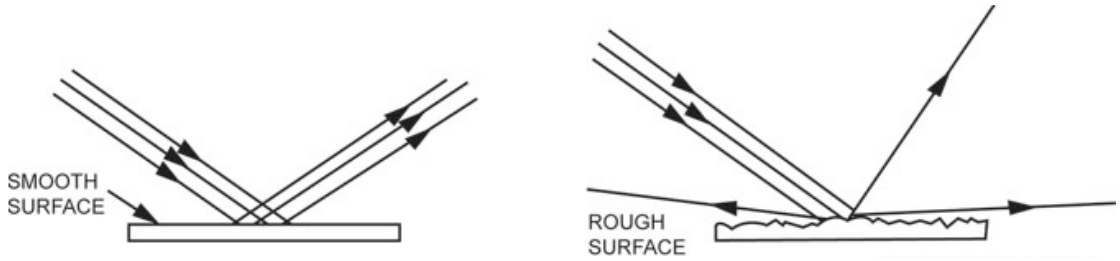

Figure 2–73. Reflection of light from surfaces.

Important angles

Four aspects of light wave propagation we must consider are shown in figure 2–74. The normal is an imaginary line perpendicular to the interface of the two materials. The angle of incidence is the angle between the incident ray and the normal. The angle of refraction is the angle between the refracted ray and the normal in the second material. The angle of reflection is the angle between the reflected ray and the normal in the first material. The angle of refraction depends on the light's wavelength, the angle of incidence, and the refractive indices of the materials.

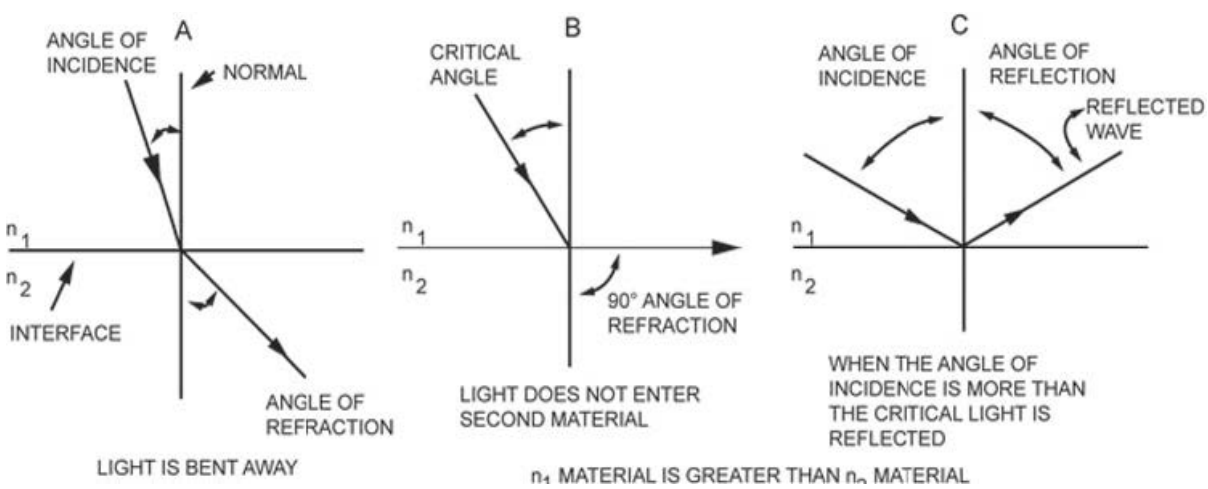

Figure 2–74. Important angles for directing light.

When light passes from a higher-index material to a lower one, it is bent away from the normal (fig. 2–74A). As the angle of incidence increases; the angle of refraction approaches 90 degrees. At this point, the angle of incidence is known as the critical angle (fig. 2–74B). If the angle is increased further, the light is reflected and will not enter the second material. In addition, the angle of reflection equals the angle of incidence (fig. 2–74C). Fiber optics works on the principle known as total internal reflection. Snell's Law states that if a ray of light enters a junction of two media of different refractive indices beyond the critical angle, the light is totally internally reflected. Figure 2–75 shows an example of internal reflection through a fiber.

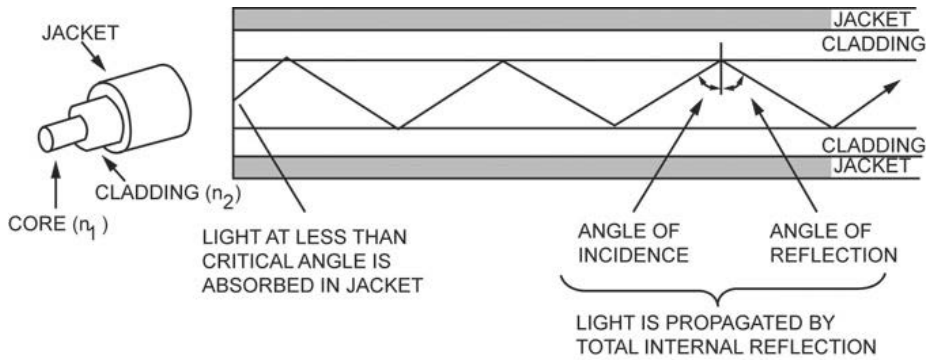

Figure 2–75. Total internal reflection through a fiber.

Numerical aperture

We call a fiber's light-gathering capability its numerical aperture. Since light is reflected only if it strikes the cladding at an angle greater than the critical angle, we can form a cone—the acceptance cone. The acceptance cone defines the reflected and not reflected light. Light rays injected at angles within the cone reflect; rays entering at steeper angles do not (fig. 2–76). The numerical aperture (NA) is an expression of this light-gathering ability because it defines the maximum angles of the acceptance cone.

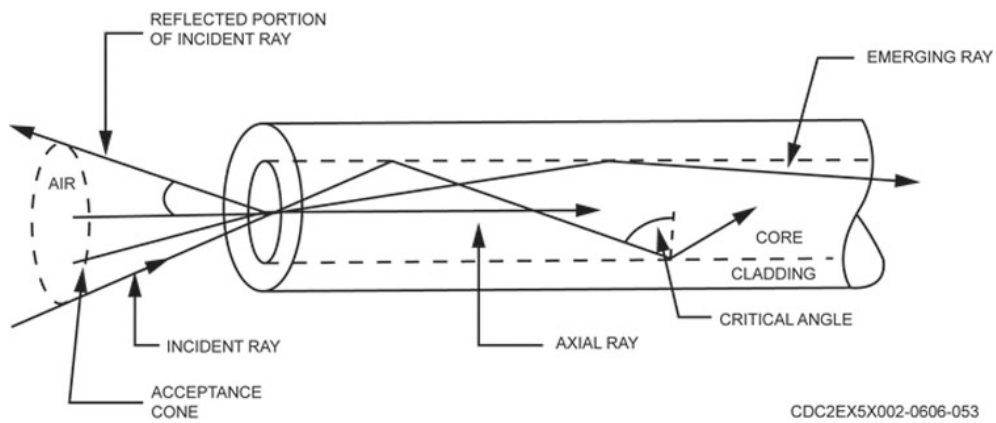

Figure 2–76. Acceptance cone.

A fiber with a large NA has a larger acceptance cone and gathers light better. The trade-off is that a large NA offers more paths for the light, so dispersion is increased. A small NA means a higher bandwidth in the fiber.

The output end of a fiber also has an NA. When light exits the fiber, it spreads out conically. The NA considerations also apply to the sources and detectors. If the source has a greater NA than the fiber, the light emitted spreads out wider than the fiber's acceptance cone and is lost. Thus, the source should have an NA equal to, or smaller than, the fiber's NA to prevent NA mismatches in the link.

A fiber's NA reaches what is called equilibrium-mode distribution (EMD) over distance. Not all modes carry the same level of energy; each has its own characteristic level. When light is first injected, it may overfill or underfill modes. Then, over a distance, the excess energy is stripped away.

The length of fiber required to reach EMD ranges from tens of meters for large-cone fiber to over several kilometers for graded-index fibers. Thus, if a receiving fiber is long enough to reach EMD, the light received at a high NA or core diameter is lost over distance. This is why we speak of short and long launch-and-receive conditions to indicate the light distribution in short and long lengths of fibers. These are the principles of how light is reflected through the fiber, but we must also consider the principles controlling the light's reflectiveness.

020. Factors that inhibit light propagation

There are a number of ways to diminish light wave travel in a fiber optic system. In this lesson, we will discuss just a few of the possibilities.

Attenuation

Attenuation is the reduction of power as a signal passes through a system. In an optical fiber, it is the loss of light power (intensity) between the source and the detector. Optical power in a fiber optic link we express in microwatts (µW) and milliwatts (mW). Figure 2–77 shows how several factors contribute to the overall loss of power in a fiber optic link.

Fiber-to-active-device connection losses include acceptance cone/rejection cone mismatches, fiber core mismatches, connection insertion loss, and intrinsic fiber loss. Fiber attenuation includes fiber tolerance variations, wavelengths transmitted, and loss from physical properties of the fiber. Fiber-to-fiber connection losses include acceptance cone/ejection cone mismatches, fiber core diameter mismatches, connector insertion loss, and intrinsic fiber loss.

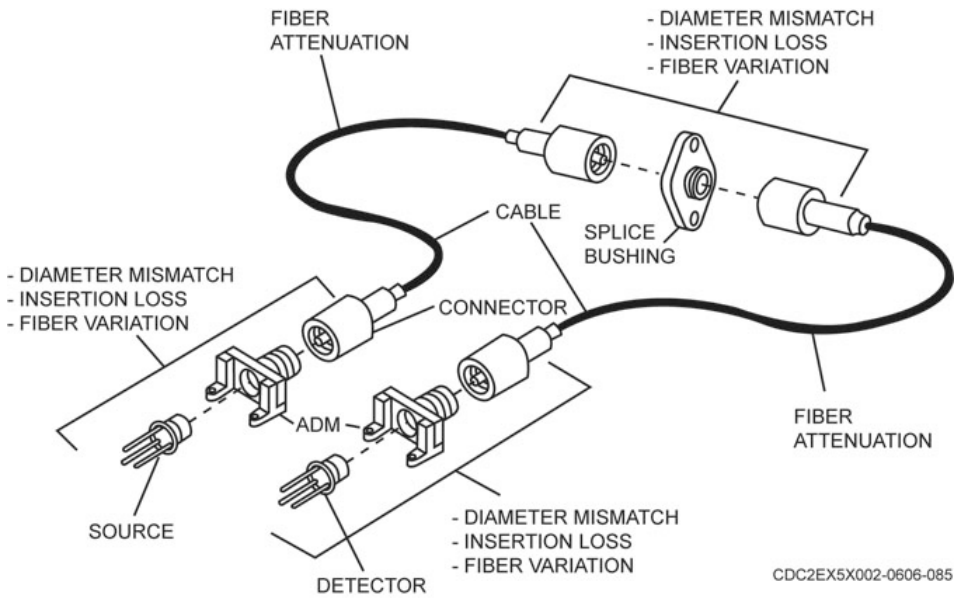

Figure 2–77. Loss factors in a fiber optic link.

Our main concern is total loss; how much of the total power emitted by the source does not reach the detector. The total loss is simply the sum of the individual losses. The loss in power is measured in decibels (dB), the logarithmic expression of the ratio of power entering a circuit and the power leaving it. Attenuation for fibers is usually specified in dB/km.

The measurement for loss in a fiber is made by taking the logarithmic ratio of the output power to the input power and expressing it in dB. A loss of 3 dB is equal to a 50 percent loss in power. If you start with 1,000 µW, you will now have 500 µW at the other end. A 10 dB loss means that 1/10th of the power entering the circuit leaves it; 90 percent has been lost. Although we are very concerned with this loss, the proper interpretation of the splice loss criterion depends on the specific project, engineers, and the customer.

Figure 2–78 shows two main causes of attenuation in a fiber—absorption and Rayleigh scattering. Impurities in glass absorb light energy and turn the photons to heat. Absorption is caused by transition-metal ions of copper, iron, cobalt, and chromium and by hydroxyl ions associated with water molecules in the glass. The amount of absorption by these impurities depends on their concentration and the light waves.

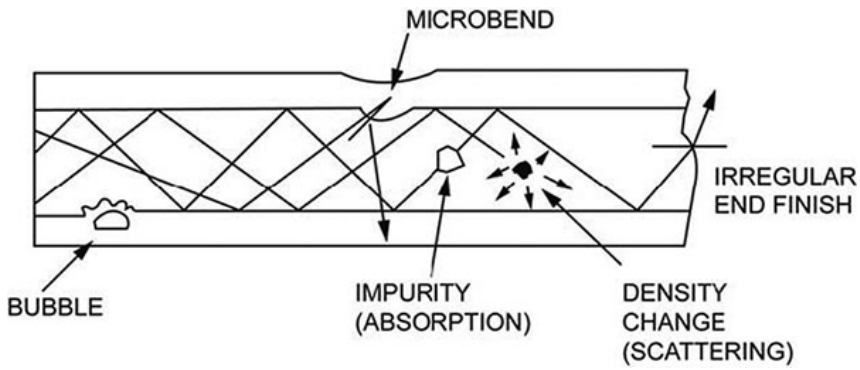

Figure 2–78. Causes of attenuation.

Scattering

Scattering results from imperfections in the fiber's basic structure. Rayleigh scattering comes from the atomic and molecular structure of the glass and from the density and composition variations that are natural byproducts of manufacturing. Small variations in the core-to-cladding interface can cause this loss.

Spectral attenuation

Spectral attenuation in a fiber is related to light wavelength and requires balancing light sources and fibers carefully. When fiber technology was in its infancy, a system operated in the 800- to 900-nm range. Since then, the trend has been to move to the long-wavelength region of 1,300 to 1,550 nm. These ranges fall into a fundamental called the "window" of low attenuation and material dispersion (fig. 2–79). When longer wavelengths are chosen, the choices of fibers and semiconductor devices are limited. Low-loss fibers are usually glass, less than 10 dB/km; medium-loss fibers are glass or plastic-clad silica, 10 to 100 dB/km; and, high-loss fibers are glass bundles or plastic, over 100 dB/km.

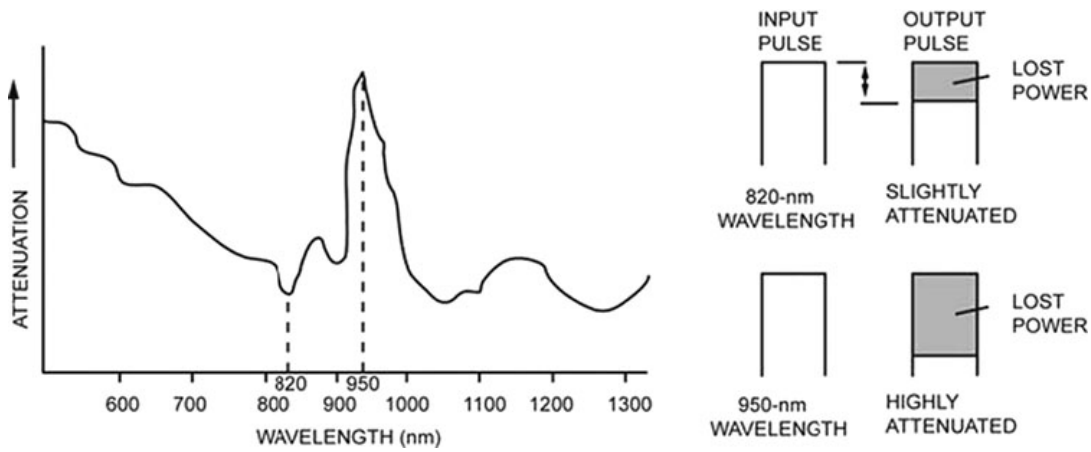

Figure 2–79. Spectral attenuation.

Reflection

Other losses can be attributed to Fresnel reflection. Fiber and fiber tolerances created during manufacture cause this type of loss. As light enters the fiber, the part that is within the acceptance cone is reflected. Fresnel losses are small and can be reduced by using index-matching fluids.

Nuclear radiation

As stated earlier in this section, nuclear radiation has a negative effect on fiber optics. Fibers exhibit significant increases in attenuation when they are exposed to large doses of radiation. When radiation interacts with the dopants and impurities in fibers, absorption and scattering increase.

Bending radius

A fiber's bending radius is the radius of the minimum curve it can bend without breaking. This varies with different cable designs. The manufacturer should specify the minimum radius to which the cable may safely be bent during installation, and for the long term. The minimum bend radius is, in general, also a function of tensile stresses; for example, during installation, while being bent around a sheave as the fiber or cable is under tension. If no minimum bend radius is specified, one is usually safe in assuming a minimum long-term low-stress radius not less than 15 times the cable diameter. Macrobending and microbending are the results of overbending a fiber.

Microbends are caused by minute distortions in the fiber imposed by externally induced disturbances. Microbending losses refer to the increased attenuation caused by pressure applied to the fiber at a discrete point.

Macrobending losses refer to the increased attenuation caused by bending the fiber in a tight radius. Fiber is much more sensitive to macrobending at 1,550 nm than it is at 1,300 nm.

Dispersion

Dispersion happens when light pulses spread out as they travel down the fiber. There is also spectral, or chromatic, dispersion, caused from different wavelengths traveling at different speeds. You have to consider the number of wavelengths emitted by the source because a light-emitting diode emits a much wider range of wavelength than a laser. Therefore, there is more dispersion.

Dispersion also limits the fiber's bandwidth. As the light pulses spread out along the fiber, they eventually start to overlap until the receiver electronics can no longer tell when one ends or the next one starts (fig. 2–80). This characteristic limits the signaling speed through the fiber. The bandwidth of a fiber is often called a distance-bandwidth product (usually given in MHz per kilometer) and is related to dispersion because it relates the maximum signal rate over a given distance.

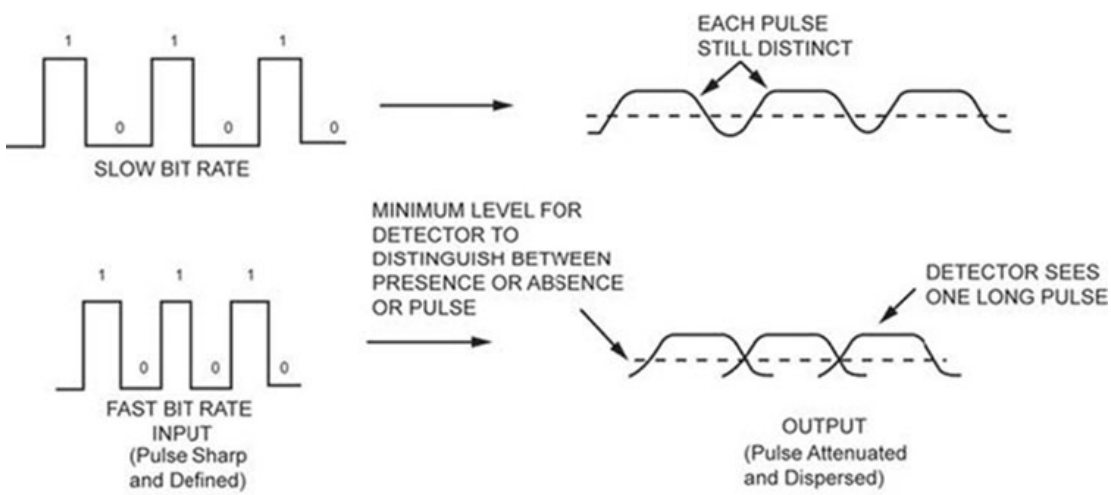

Figure 2–80. Frequency and dispersion.

The two main types of dispersion are modal and material. Modal dispersion arises from the different paths of light in various modes. Material dispersion arises from different velocities of different wavelengths. Material dispersion is generally less significant than modal dispersion in multi-mode fiber. However, a single-mode fiber has no modal dispersion; material dispersion is its sole frequency-limiting mechanism.

Dispersion is measured in nanoseconds per kilometer (ns/km). In a short length of fiber, dispersion is proportional to length. If the dispersion is 5 nanoseconds (ns) for 100 meters, it is 10 ns for 200 m. For long lengths with mode coupling, dispersion is proportional to the square root of the fiber length. Advantages of low dispersion in a fiber come through trade-offs against other fiber characteristics.

021. Classifying optical fibers

One way you can classify fibers is by material composition. All glass or silica is the most efficient. The intermediate is plastic-clad silica fibers, which have a glass core and a plastic cladding. The third, all plastic, is the most rugged and economical.

The most useful way to classify optical fibers is by the number of modes and the core's refractive index profile. Mode is a mathematical and physical concept describing the propagation of electromagnetic waves. For our purpose, a mode is simply a path that light can take in traveling down a fiber. Most fibers support many modes or light paths. In addition, each mode can carry a certain amount of optical energy. When light is first injected into a fiber, the various modes may have too much or too little energy. Over distance, energy tends to transfer between modes until all modes carry their characteristic amount of energy.

Types of fibers

There are two basic types of fibers in terms of mode. The first is the single-mode, meaning one path for light to travel. The second type is the multimode, which means light has many paths to travel.

The refractive index profile describes the relationship between the core's refractive index and the cladding's refractive index. If the core's index is the same throughout, the profile shows a sharp step at the meeting of the core and cladding. This is called a step-index (SI) fiber, which may be either a single-mode or a multimode fiber. If the core's index is not the same throughout, it is called a graded-index fiber, which is normally a multimode fiber. Based on this classification, there are three types of fibers: multimode SI, single-mode SI, and multimode graded-index (GI) (fig. 2–81).

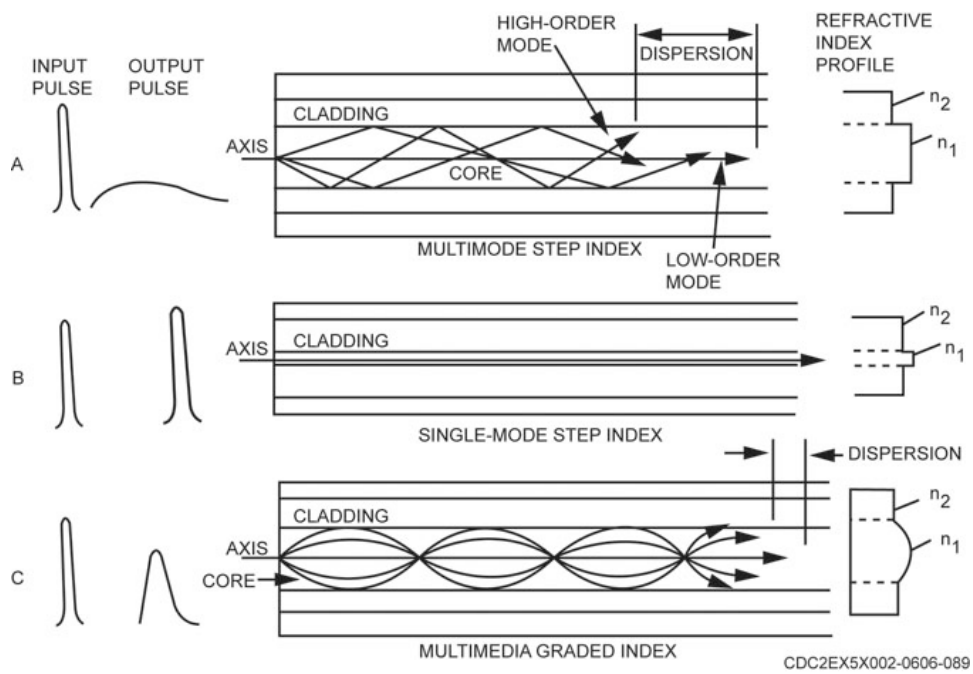

Figure 2–81. Types of fibers.

Multimode step-index fiber

The single fiber has a core diameter ranging anywhere from 30 µm to over 800 µm. It has a high refractive index core and lower index cladding with a sharp (step) difference between the two. The large core allows many modes of light to travel down its length. Since light reflects differently for different modes, some rays follow longer paths than others do. The lowest-order mode, the axial ray (fig. 2–81A), travels down the center of the fiber without reflecting. It arrives at the end of the fiber first, before the high-order modes that reflect at the core-to-cladding interface at close to the critical

angle and therefore take a longer route. Because of this, a narrow pulse of light spreads out as it travels through the fiber. Multimode SI has the *highest* dispersion of all three modes. This makes the multimode SI fiber the least efficient of the three.

Single-mode step-index fiber

To limit dispersion in a fiber, we can reduce the core's diameter until the fiber only propagates one mode efficiently. A single-mode fiber has a core diameter in the order of 2 to 8 µm and a cladding diameter of 125 µm. It is very efficient for long-distance and very high-speed applications. The drawback is that the fiber is hard to work with and requires a laser to couple the light into the small core. This fiber is shown in figure 2–81B.

Multimode graded-index fiber

Another way to reduce dispersion is to use GI fibers with a core diameter of 50–125 µm. The core's diameter is actually numerous concentric layers of glass, something like the annular rings of a tree.

As you go away from the center, each layer has a lower refractive index. The concentric rings cause the light to start refracting as it passes through each ring until it starts its downward swing and produces the curved look of the light wave (fig. 2–81C). Since light travels faster in a lower-index medium, light farther away from the fiber axis (center) travels faster. Because of this, all modes tend to arrive at any point at nearly the same time. The rays of light are not sharply reflected by the core-to-cladding interface; they are refracted successively by the different layers of the core. Since the path distances are more equal in a given amount of time, dispersion is reduced along with the resulting signal distortion and attenuation.

Self-Test Questions

After you complete these questions, you may check your answers at the end of the unit.

017. Fiber optics overview

1. How do we define fiber optics?

2. What is the *most common* use of fiber optics?

3. One of the advantages of fiber optics is high bandwidth. What is bandwidth?

4. Compare attenuation in fiber optics to attenuation in metallic cables.

5. Optic fibers are made of dielectric materials. How are fiber optic cables affected by electromagnetic interference?

6. Why are communications over fiber optic cables highly secure?

7. Name two safety precautions to observe when working with fiber optics.

018. Elements of fiber optic cables

1. What are the components of a typical fiber optic cable?

2. Describe the fiber core.

3. What is the purpose of the fiber cladding around the core? What material is it made of?

4. List the three *major* types of buffering designs.

5. How is a loose-tube buffer formed?

019. Principles of light wave propagation

1. What characteristic of the carrier wave does the energy possessed by the photon determine?

2. Photon particles are a part of what spectrum?

3. What is the frequency range of infrared light?

4. Describe refractive index.

5. What do we call the phenomenon that occurs when light bends while passing through material of different density?

6. Describe reflection.

7. List the four basic facts that we *must* consider in understanding light wave propagation.

8. What happens to light when it passes from a higher-index material to a lower one?

9. Describe the critical angle.

10. What does Snell's law state?

11. What is numerical aperture?

12. How is light affected in a cable that has a large numerical aperture?

13. How does a fiber reach equilibrium-mode distribution?

020. Factors that inhibit light wave propagation

1. How do we express the amount of power in a fiber optic link?

2. To what can we attribute fiber-to-fiber connection power losses?

3. What unit of measurement do we use to express fiber optic attenuation?

4. List the two *main* causes of attenuation in optical fibers.

5. What is spectral attenuation?

6. How can we reduce Fresnel losses in a fiber?

7. What effect does nuclear radiation have on fiber optic cables?

8. What happens when a fiber's bending radius is exceeded?

9. What is dispersion in a fiber optic cable?

10. How does dispersion affect the bandwidth?

11. What causes each of the *two main* types of dispersion?

12. How do we measure dispersion?

021. Classifying optical fibers

1. Optical fibers are *normally* composed of what materials?

2. How are optical fibers *generally* classified?

3. What is a mode?

4. The refractive index is a relationship between what elements of a fiber?

5. Briefly describe the three fiber classifications.

6. Which fiber classification has the highest dispersion factor?

7. Which fiber type is very efficient for long-distance and very high-speed applications, but is hard to work with?

Answers to Self-Test Questions

007

1. A conductor or series of conductors used to carry energy from a source to a load. Examples include the flexible coaxial cable, the rigid coaxial cable, an AC power cord on a stereo, a cable television wire, and a telephone cord.
2. Resistive, skin effect, radiation, induction, capacitive, and leakage.
3. Using standoff insulators and shielded conductors.
4. The dielectric and skin effect.
5. Because the energy is confined between the two conductors.
6. Its series inductance and capacitance.
7. The size of the conductors, the space between them, plus the dielectric material.
8. The frequency at which the value of X_L and X_C are such that the signal is developed across the series inductance and shunted by the capacitance and, thus, not passed along the line.
9. The distance in space occupied by one cycle of a radio wave at any given instant.
10. Wavelength increases.
11. Comparison of physical length and wavelength expressed in number of wavelengths.
12. Wavelengths.
13. Decreases.
14. It is a line having no reflected waves.
15. Voltage and current waves as they move from source to load.
16. It is the vector sum of the forward and reflected waves.
17. This is a comparison (expressed as a ratio) of the maximum and minimum voltages found along the line.
18. 1:1.
19. Voltage will be at maximum across an open.
20. Voltage is reflected 180 degrees out of phase.
21. A balun.

008

1. Military avionics applications.
2. 32.
3. Status.
4. 255.950 MHz.
5. DB-25.
6. One direction.
7. In a half-duplex channel, data may travel in both directions but only one direction at a time. In a full-duplex channel, data may travel in both directions simultaneously.
8. They allow computers to communicate with other computers or computer systems.
9. Voltage signals where a voltage is either present or not present.
10. Frame ground. It ensures the chassis of two devices are at the same ground potential to prevent electrical shock to the user.

009

1. Microwave range.
2. When the distance between the central conductor and the inner sheath of a coaxial cable approaches the dimensions of quarter-wavelength.
3. Less radiation loss because fields are completely confined by the conductors.
4. Conductive material.
5. Copper loss (I^2R).

6. Skin effect.
7. Air.
8. Physical size. The width of the waveguide must be approximately half wavelength of the frequency transmitted.
9. The interaction of the magnetic (H-field) and electric fields (E-field) causes the energy to travel through the waveguide.
10. The relative strength of the field and how evenly distributed the field is.
11. Current flow in a conductor.
12. The fields cancel between the sections.
13. Size and shape of the probe.
14. Slots or apertures.

010

1. The carrier.
2. Unmodulated carrier frequency, USB, and LSB.
3. The sidebands.
4. The bandwidth required is two times the modulating signal frequency.
5. It refers to the amount of effect or change that the intelligence has on the carrier.
6. The percent of modulation is 62.5 percent, found by dividing 2.5 by 4 and multiplying the result by 100.
7. 81.8 percent.
8. Severe distortion and increased bandwidth of an AM signal.
9. EMI and/or RFI.

011

1. They are directly proportional.
2. The amplitude of the modulating signal.
3. The FCC.
4. A sideband that contains at least one percent of the total transmitted power.
5. By dividing the amount of frequency deviation by the frequency of the modulating signal.
6. From the unmodulated carrier.
7. A higher modulation index means more power in the sidebands. It is even possible to have all the power in the sidebands and none in the carrier. At this point, any further increase in modulation would start taking power from the sidebands and placing it back in the carrier resulting in a redistribution of power.

012

1. None. The frequency change in PM is incidental.
2. During the positive alternation of the modulating signal, the phase of the carrier lags behind the unmodulated carrier. During the negative alternation, it leads the unmodulated carrier.
3. During the constant amplitude part of the modulating frequency.
4. Amplitude.
5. Frequency.

013

1. A modulation technique in which the phases and powers of the two individual signals mix within airspace, rather than in a modulator.
2. Localizer.
3. An ~3 degrees glide path to the runway threshold.
4. Zero.
5. On the attitude indicator.

014

1. (1) Band limiting; (2) Sampling; (3) Quantizing; (4) Encoding.
2. To ensure the input to the sampler never exceeds a maximum frequency.
3. Converting a continuous time signal into a discrete time signal.
4. PAM = amplitude, PWM = width or duration, PPM = position.

015

1. One character in length.
2. The start and stop bits.
3. By summing the 1 bits. If the character arrives with an even number of bits, the device assumes that it has received a correct character.
4. Reduces the overhead costs of data transmission.
5. Synchronous transmissions block many characters together for transmission.
6. It combines the features of an asynchronous and synchronous data transfer system.
7. Streaming video.
8. The process of transmitting more than one channel of information over a single line.
9. Time-division multiplexing.
10. Wave division multiplexing.

016

1. Odd or even parity.
2. BBC.
3. 255.
4. CRC treats the binary ones and zeros in the frame address, control, and information fields as one long binary number.
5. 99 percent in most applications.
6. The receiver automatically sends a retransmitted request to the sender if it finds an error in a received frame.
7. Receiving end.
8. To transmit multiple copies of the same message to the distant end.
9. To compare all copies of the transmitted message, and then reconstruct the message using the good portions of the message copies received.

017

1. A technology in which light is transmitted along the inside of a thin, flexible glass or plastic fiber.
2. A transmission link connecting two electronic devices or circuits.
3. High bandwidth, the information-carrying capacity of a carrier wave.
4. Optical fibers have less attenuation (power loss) than metallic cables.
5. Since fiber optic cable does not radiate or absorb energy through its outer jacket, it is immune to this type of interference.
6. It is virtually impossible to tap a fiber optic cable unnoticed because the light-carrying part of the core is so affected by the tap that it is easily detected. Since fiber does not radiate energy, other eavesdropping techniques are useless.
7. (1) DO NOT look into a laser beam, severe eye injury or blindness could result; (2) Always wear goggles when working with the fibers to protect against flying fragments of silica, especially if you clean the fibers.

018

1. Core, cladding, and protective coating (buffer).
2. It is often made from a solid section of ultra-pure, ultra-transparent silicon dioxide or fused quartz (glass), but may also be made of plastic.
3. Provides the reflective surface that allows light to propagate along the core to the distant end. It is a solid section of transparent glass or plastic with a much lower density than the core.
4. (1) Tight buffer tube; (2) Loose tube; (3) Ribbon.
5. Optical fibers are usually coated with a thin layer of acrylate (250 µm diameter) and then several fibers are placed in a hard plastic tube with an inside diameter several times larger than the diameter of the fiber.

019

1. The frequency.
2. Electromagnetic spectrum.
3. 750 to 1,500 nm.
4. Ratio of the speed of light in a vacuum to its speed in a given medium.
5. Refraction.
6. Reflection is the bouncing back of light from an object.
7. (1) The normal (imaginary line perpendicular to the interface of the two materials); (2) The angle of incidence (between the normal and the incident ray); (3) The angle of refraction (between the refracted ray and the normal in the second material); (4) The angle of reflection (between the reflected ray and the normal in the first material).
8. Bent away from the normal.
9. The angle of incidence that causes the angle of refraction to equal 90 degrees.
10. If a ray of light enters a junction of two media of different refractive indices beyond the critical angle, the light is totally internally reflected.
11. A fiber's inherent light-gathering capability.
12. Dispersion is increased.
13. Over distance.

020

1. In microwatts or milliwatts.
2. Acceptance cone/ejection cone mismatches, fiber core diameter mismatches, connector insertion loss, and intrinsic fiber loss.
3. dB/km.
4. (1) Absorption; (2) Rayleigh scattering.
5. It is related to light wavelengths and requires careful balancing of light sources and fibers.
6. By using index-matching fluids.
7. Increased attenuation caused by absorption and scattering.
8. It experiences macrobends or microbends.
9. The spreading out of the light in a fiber.
10. Limits it.
11. Modal dispersion is caused by the different paths of light in various modes. Material dispersion is caused from different velocities of different wavelengths.
12. In (ns/km).

021

1. Entirely of glass or silica, plastic-clad silica, or all plastic.
2. By the number of modes and the core's refractive index profile.
3. A mathematical and physical concept describing the propagation of electromagnetic waves, but for our purpose it is simply a path that light can take in traveling down a fiber.

4. The core's refractive index and the cladding's refractive index.
5. (1) Multimode step-index: This fiber has a core diameter of 30 to over 800 µm with a constant index of refraction, and a step change in index at the cladding boundary. It allows many modes of light to travel; (2) Single-mode step-index: Small core diameter of 2 to 8 µm helps eliminate dispersion. It propagates one mode efficiently; (3) Multimode graded-index: Has a core diameter of 50 to 125 µm. The core has numerous concentric layers of glass that decrease in refractive index as they go away from the center.
6. Multimode step-index.
7. Single mode step-index.

Complete the unit review exercises before going to the next unit.

Unit Review Exercises

Note to Student: Consider all choices carefully, select the *best* answer to each question, and *circle* the corresponding letter. When you have completed all unit review exercises, transfer your answers to the Field-Scoring Answer Sheet.

Do not return your answer sheet to AFCDA.

20. (007) What is the *wavelength* if the frequency is changed from 150 megahertz (MHz) to 250 MHz?
    a. 12.0 meters.
    b. 3.0 meters.
    c. 1.5 meters.
    d. 1.2 meters.

21. (007) On a transmission line with an open termination, the wave is reflected back to the source and
    a. signal loss would be negligible.
    b. there would be significant signal loss.
    c. the current would be at maximum at the termination.
    d. the voltage would be at minimum at the termination.

22. (008) What data bus was originally developed for military avionics applications?
    a. Institute of Electrical and Electronics Engineers (IEEE)–488, General Purpose Interface Bus (GPIB).
    b. Recommended standard 232.
    c. Military Standard (MIL-STD)–1553.
    d. Recommended Standard (RS)–488.

23. (009) Energy travels through a waveguide because of
    a. electric fields.
    b. magnetic fields.
    c. harmonic balance of the signal frequency.
    d. interaction of magnetic and electric fields.

24. (009) Three devices used to inject or remove energy from waveguides are known as
    a. coils, loops and apertures.
    b. coils loops and windows.
    c. probes, loops, and coils.
    d. probes, loops, and slots.

25. (010) When the modulating signal and carrier signal are combined within a modulator, the *output signal* contains the
    a. modulating signal, upper sideband, and lower sideband.
    b. carrier, upper sideband, and lower sideband.
    c. upper sideband and modulating signal.
    d. carrier and modulating signal.

26. (010) If the modulating audio signal is 10 kilohertz (kHz) wide, what is the bandwidth (BW) of the transmitted amplitude modulated signal?
    a. 5 kHz.
    b. 10 kHz.
    c. 15 kHz.
    d. 20 kHz.

27. (010) Reducing modulation to less than 100 percent results in
    a. more total power.
    b. a reduction in carrier power.
    c. no reduction in carrier power.
    d. a reduction in carrier and sideband power.

28. (011) The oscillator output in a frequency modulation (FM) modulator increases in frequency with each
    a. positive half cycle of the carrier.
    b. negative half cycle of the carrier.
    c. positive half cycle of the modulating signal.
    d. negative half cycle of the modulating signal.

29. (011) The formula to find the modulating index is
    a. deviation divided by frequency of modulation.
    b. deviation times frequency of modulation.
    c. sideband divided by carrier frequency.
    d. sideband times carrier frequency.

30. (011) What is the modulation index of a 5 kilohertz (kHz) modulating signal that has enough peak voltage to cause a deviation of 15 kHz?
    a. 0.3.
    b. 0.5.
    c. 3.0.
    d. 5.0.

31. (012) In phase modulation, the rate of phase shift is
    a. proportional to the frequency of the modulating signal.
    b. proportional to the amplitude of the modulating signal.
    c. inversely proportional to the frequency of the modulating signal.
    d. inversely proportional to the amplitude of the modulating signal.

32. (013) Space modulation is commonly referred to as
    a. difference in the depth of modulation (DDM).
    b. pulse code modulation (PCM).
    c. frequency modulation (FM).
    d. phase modulation (PM).

33. (014) What is the first step in the pulse code modulation (PCM) process?
    a. Assigning discrete amplitudes to the sampling pulses.
    b. Assigning a binary code number to the sample.
    c. Quantizer limiting the amplitude of the pulses.
    d. Band-limiting the analog signal.

34. (015) How does synchronous transmission reduce the overhead costs of data transmission?
    a. Communicates in parallel format.
    b. Blocks many characters together for transmission.
    c. Eliminates the control bits, so more message data can be sent.
    d. Uses low cost equipment to support synchronous transmission.

35. (015) Which method of transmission requires the receiving end to be synchronized with the transmitting commutator?
    a. Amplitude modulation (AM).
    b. Pulse code modulation (PCM).
    c. Time division multiplexing.
    d. Wave division multiplexing.

36. (016) When using forward error control as a method of error correction, error correction takes place
    a. in the oscillator.
    b. at the receiving end.
    c. in the primary buffers.
    d. at the transmitting end.

37. (017) Which statement describes an *advantage* of using fiber optic (FO) cables?
    a. The easy tap-ability of fiber optic cables reduces security risks.
    b. Fiber optic cable has a higher attenuation than coaxial cable.
    c. Electromagnetic fields do not affect fiber optic cables.
    d. Nuclear radiation does not affect fiber optic cable.

38. (017) One *disadvantage* to using fiber optic (FO) cables is that
    a. fiber optic cables are easy to tap and cause a security risk.
    b. they have a low bandwidth and can only carry a few signals at once.
    c. nuclear radiation can darken the optical fiber and cause signal loss.
    d. required fiber optics weigh more and take up more space than metallic cables.

39. (018) What component of a fiber optic (FO) cable provides the reflective surface that allows light to propagate?
    a. Core.
    b. Jacket.
    c. Buffer.
    d. Cladding.

40. (019) When considering light wave propagation, what is the name of the angle between the normal in the first material and the ray that is bounced back in the first material?
    a. Angle of refraction.
    b. Angle of incidence.
    c. Angle of reflection.
    d. Critical angle.

41. (020) What logarithmic expression do we use to specify the ratio of power loss in fiber optic (FO) cables?
    a. Decibels-per-nanometer (dB/nm).
    b. Decibels-per-kilometer (dB/km).
    c. Decibels-per-centimeter (dB/cm).
    d. Decibels-per-meter (dB/m).

42. (021) What is the *most* useful way to classify fiber optic (FO) cable?
    a. Fiber material and number of fibers.
    b. Buffer type and application method.
    c. Numerical aperture and cable elements.
    d. Core’s refractive index profile and number of modes.

43. (021) What type of fiber has a core diameter of 50–125 micrometers (µm) and consists of numerous concentric layers of glass, something like the annular rings of a tree, configured to reduce dispersion?
    a. Multimode step-index.
    b. Single-mode step-index.
    c. Multimode graded-index.
    d. Single-mode graded-index.

Please read the unit menu for unit 3 and continue ➔

Unit 3. Fixed Radio Equipment

3−1. Transmitters 3–1
022. Transmitter fundamentals 3–1
023. Very high and ultra high frequency transmitters 3–2
024. CM–300 and CM–350 transmitters 3–6
3−2. Receivers 3–8
025. Receiver fundamentals 3–8
026. Very high and ultra high frequency receivers 3–13
027. CM–300 receivers 3–16
3−3. Transceivers 3–19
028. Transceiver fundamentals (refer to foldout 10 and 11) 3–19
029. Very high and ultra high frequency transceivers (refer to foldout 12) 3–21
030. CM–350 transceiver configuration 3–29
3−4. Ancillary Equipment 3–33
031. Antenna propagation and basic elements 3–33
032. Common air traffic control antennas and couplers 3–35
033. Other associated equipment 3–38

A TRANSMITTER GENERATES radio frequency (RF) power and modulates it with the information to be transferred. Transmission lines carry this RF from the transmitter to the transmitting antenna, which radiates the energy into space as electromagnetic waves. A receiving antenna picks up some of the radiated energy. Transmission lines carry the received power to the receiver, which extracts the information and provides it to us in the form of audio. Along the transmission and receive path, other pieces of equipment utilize the signal in different ways.

This is just an abbreviated description of a typical radio communications system. We will look at each piece of the communications system in more depth, beginning with the transmitter.

3−1. Transmitters

Transmitters are an integral part of RAWS core equipment. Many of the bases and assignments that you will be stationed at maintain some version of a transmitter. This section will identify basic transmitter characteristics, to build a foundation, before describing more in-depth transmitter signal flow of a few commonly used transmitters.

022. Transmitter fundamentals

The transmitter contains a microphone for converting sound (raw intelligence) to electrical signals having the same frequency components and amplitude relationships as those contained in the sound signal. By using the electrical intelligence signal to modulate (change some characteristic of) a carrier, the transmitter shifts (converts) the electrical intelligence signals to an assigned higher frequency range. At the new higher frequency, they do not interfere with other intelligence signals assigned to other frequencies. The transmitter also supplies sufficient power to transfer the intelligence signals through a given transmission medium (through space or over a transmission line) to the distant receiver. A few characteristics that help these actions take place are stability and modulation (MOD).

Stability

For successful communications to take place, the carrier output must be relatively stable in frequency and amplitude. There should not be a significant amount of noise, harmonics, or spurious outputs.

A transmitter's frequency accuracy refers to its ability to maintain a constant output carrier frequency. Frequency accuracy is often expressed as a percentage. For example, a transmitter's frequency accuracy might be 0.0001 percent. If the carrier frequency is 146.000 MHz (megahertz), then the carrier can vary up and down by 146 Hz (hertz) and still be acceptable. 146,000,130 Hz would be acceptable; 146,000,160 Hz would not.

NOTE: Remember to add two zeros when you do these calculations; that is, .0001 percent is equal to 0.000001 when multiplying—in our example here, 146,000,000 multiplied by 0.000001 = 146.

A transmitter's output distortion is often stated as a comparison between the desired output and the noise in the output, expressed in decibels (dB). For instance, a 15 W transmitter's output noise level could be expressed as 80 dB down. This means the power in the noise must be 80 dB smaller than the desired output power. For instance, a 15-W transmitter can have 15 W out with no more than .15 µW of noise out.

Modulation

The last unit thoroughly explained modulation. Remember, AM is the process of heterodyning an intelligence (audio) signal with an RF carrier to produce a new signal. When viewed on an oscilloscope, this new signal appears to be varying at the audio rate. In the early days of radio communications, modulation in an oscillator circuit of the transmitter was common. Now, transmitters are designed with the modulation occurring in the amplifier circuits. This change was driven by the need for better frequency stability as well as by the fact that oscillations would tend to stop in an oscillator when 100 percent modulation was used.

023. Very high and ultra high frequency transmitters

Now that we have discussed some basic transmitting fundamentals, we can look at two particular transmitters commonly used in the Air Force: the VHF (very high frequency) AN/GRT–21 and UHF AN/GRT–22.

Capabilities and limitations of the AN/GRT–21/22

Both the AN/GRT–21 and AN/GRT–22 transmitters are identical in physical size and designed for mounting in a standard 19-inch rack or cabinet. The GRT–21 is capable of transmitting on any one of 2720 channels spaced 25 kHz between 116.000 and 149.975 MHz VHF. The GRT–22 provides transmission capabilities on any one of 7,000 channels spaced 25 kHz between 225.000 and 399.975 MHz UHF. Both radios use amplitude modulation as their fundamental transmission method. The table below lists several of the key operating parameters of these radios. You can find a complete list in Technical Order (TO) 31R2–2GRT–102, *Service Instructions and Circuit Diagrams — Radio Transmitter Set, Type ANGRT-21(V), -22(V).*

CHARACTERISTICS	SPECIFICATIONS
Frequency Range (VHF) Frequency Range (UHF)	116.000 to 149.975 MHz with 2720 channels spaced 25 kHz. 225.000 to 399.975 MHz with 7,000 channels spaced 25 kHz.
Frequency Accuracy	Oscillator synthesizer ±0.0005 percent after 5-minute warm-up.
Power Output	10 to 12.5 W into 50-Ω resistive load over entire frequency range at 90 percent ±10 percent modulation level.
Modulation	90 percent ±10 percent with any sine wave frequency between 300 and 6,000 Hz.
Duty Cycle	Continuous.
Audio Frequency Response	Between 300 and 6,000 Hz modulation amplitude within +1 dB and –2 dB from the modulation amplitude at 1,000 Hz.

CHARACTERISTICS	SPECIFICATIONS
Audio Compression and Limiting	Prevents over modulating of carrier under all conditions 90 ±10 percent modulation level maintained with levels from –15 to +10 decibels relative to a 1 milliwatt standard (dBm) or (–35 to –15 dBm using special strapping option).
Audio Distortion	At rated carrier output 90 percent modulated and at all frequencies between 300 and 6,000 Hz total harmonic distortion in demodulated output condition is less than 10 percent at 0 dB compression and limiting.
Thermal Protection	Solid-state protective circuitry actuated at 85 degrees Celsius.

One question that always comes to mind is "how does this piece of equipment work?" That is the focus of this discussion. We will begin with a quick look at the basic signal flow and conclude with a more in-depth look at the individual modules.

Block diagram (refer to foldout 1)

Foldout 1 is a block diagram of the transmitter. The antenna is connected to the switch, RF transmission line, and earth leakage (E/L) relay at input K1J1 using a linear power amplifier (LPA) in 50-W mode or input K1J3 if operating an exciter without the LPA in 10-W mode.

The audio usually comes from a remote input such as the air traffic control tower (ATCT), but you can also use a microphone plugged into the front panel of the transmitter. Locate the remote audio and keying input to the A1 on the left hand side of the foldout. The audio from the control tower comes in over telephone lines. Local input from the front of the radio is directly above the remote input and comes through an audio transformer to the A1 module. Remember, the A1 module is a compression amplifier that maintains constant audio amplitude out with varying audio amplitude inputs. As a result, the modulation percentage will not vary with changing inputs.

Output of the A1 module goes to the A4, which has two sections—a filter section and a metering section. A detector in the A4 uses the audio to develop a direct current (DC) voltage for the front-panel metering circuits. The filter portion sets the audio frequency (AF) response of the radio at 300 to 6,000 Hz. Output of the filter portion applies to the buffer modulator A5.

Wideband audio (data, if used) is sent to the buffer modulator A5. A clipper limits the wideband audio input to prevent over modulation. The audio goes to the A6 module where it combines with the automatic power control (APC) voltage. This combined signal—the APC/MOD signal—goes to the A10 module where it modulates the carrier.

The RF generates in the A8 module, labelled "oscillator synthesizer" in foldout 1. Since the output of the A8 becomes the output RF, the accuracy and stability of the oscillator synthesizer determines the frequency accuracy and stability of the transmitter set. The oscillator synthesizer output is manually set by thumbwheel switches on the front of the module and is either one-fourth or one-half of the transmitter operating frequency (one-half if the transmitter is an AN/GRT–21; one-fourth if the transmitter is an AN/GRT–22). This signal then goes to the multiplier A9 module. The multiplier A9 is a quadrupler in the UHF version and a doubler in the VHF version. The output of the A9 is at the transmitter operating frequency. To determine the oscillator synthesizer thumbwheel setting on the UHF transmitter, divide the desired operating frequency by 4; and for the VHF transmitter, divide by 2. So for an operating frequency of 300 MHz, the AN/GRT–22's oscillator synthesizer thumbwheels would be set for 75 MHz, and the multiplier would be tuned for the fourth harmonic—300 MHz.

After the signal multiplies, it goes to modulate the driver section of the A10 module. The modulated carrier then goes through the tunable filter FL2. The tunable filter eliminates unwanted harmonics generated in the A10 driver. After filtering, the signal travels back to the A10 power amplifier (PA) section. The A10 PA amplifies the signal to 10 W and sends it to low-pass filter FL1, which eliminates harmonics.

The power detector DC1, the A10, and control RF/modulator A6 make up an APC circuit. DC1 develops two DC voltages that represent the forward power (P_I) and reflected power (P_R). These two voltages go to the A6 module where they are used to develop the APC voltage. The APC voltage controls the gain of the A10 module. If forward power is getting too high, the APC voltage varies the gain of the A10 to normalize it.

With the transmitter in the 10-W mode (exciter alone), the E/L relay has no purpose. If the LPA is being used, (50-W mode) the E/L relay is used to bypass a defective LPA or bypass the LPA in the event of alternating current (AC) power failure or excessive voltage standing wave ratio (VSWR). When the relay is energized, the 10-W modulated RF signal travels from power detector DC1 straight through the relay to K1J1 to the antenna. The E/L relay routes the RF to K1J3 when de-energized (LPA operating). If in the 50-W mode and the VSWR exceeds 3:1, the A6 module applies the VSWR LPA signal to A7 module. The A7 module then applies a voltage to the E/L relay, causing it to energize, which results in the output signal bypassing the LPA.

The thermal control input tells the A7 module the temperature of the power supply. If the temperature is too high, the A7 module develops the keyer inhibit voltage that prevents the A2 module from developing the keyed +20 volts direct current (VDC).

Individual modules

Now we will take a closer look at the operation of some of the individual modules in the transmitter. Keep in mind that while we will be discussing a specific transmitting set, the principles and functions of each circuit are very common to most transmitters.

Filter/amplifier A4 module (refer to foldout 2)

Foldout 2 is a schematic of the filter/amplifier A4 module. Notice the drawn in block representing the compression amplifier A1 and the local/remote switch. The audio at the local/remote switch has not yet been compressed and the audio out of pin 13 of the A1 module has been compressed. Note that the top half of the schematic is a metering circuit and the bottom half is a filter circuit.

The metering circuit takes a sample of the audio in to A4 pin 8. Q1, Q3, and Q4 amplify the audio while Q5 detects the audio. The resulting voltage is a DC voltage that is directly proportional to the audio strength. This voltage goes to pins 13 and 14 through two different resistances. These two levels go through the meter switch to the positive side of the meter. The negative side of the meter is connected back to A4 pin 15. The negative side of the meter is not connected directly to ground because the positive side of the meter will have a small bias voltage from the transistor on it. Adjust R41 to balance out the transistor bias so that the meter reads zero when there is no signal input. The meter readings labeled AF LVL HI and AF LVL LO represent the audio input to the radio (precompression).

After compression, the audio goes to a low-pass filter (R15, C7, R16, C8, R17, and C9) that has a cutoff of 6 kHz. It is then fed to a Darlington pair. This compound structure of transistors is connected in such a way that the current amplified by the first transistor is amplified further by the second. Darlington pair Q7 and Q8 amplify the audio, which is then goes to a high-pass filter (C10, R21, C11, R22, and C12) that has a cutoff of 300 Hz. Another Darlington pair, Q9 and Q10, provide further amplification. The two amplifier sections have very little gain, just enough to cover the losses due to the filters. The input amplitude is 1.8 volts peak-to-peak, and the output amplitude is 1.9 volts peak-to-peak. Notice that there is a filter amp meter output. This is a detected sample of the audio going to the front-panel meter switch.

Multiplier A9

The multiplier is a doubler in the VHF transmitter and a quadrupler in the UHF version. The signal in to this module comes from our oscillator synthesizer A8 module.

Due to the fourth harmonic being weaker than the second, the UHF multiplier contains one more stage of amplification than the VHF version does. From the multiplier, the signal goes to the driver power amplifier A10. There is both a UHF and a VHF version of the driver power amplifier A10; we will look at the VHF version.

Very high frequency driver power amplifier A10 (refer to foldout 3)

The carrier from the multiplier goes first to the A10A1 driver where it is amplified, modulated, and APC controlled. From there, the signal goes to the tunable filter FL2, which blocks noise. The signal then goes to the A10A2 power amplifier, which amplifies the signal up to 10 W.

Foldout 3 is a schematic diagram of the A10A1 driver. The RF is sent to the fantail (dual emitter) transistor Q1. The APC voltage biases Q1. The modulating signal travels along with the APC voltage to the base of Q1. Q1 amplifies the signal and modulates the carrier. The modulated RF is amplified by Q2, Q3, and then is filtered by tunable filter FL2.

Notice the tune/operate switch and circuit drawn in above the schematic of the module; locate S6 and R1 before you continue. When S6 is in the OPERATE position, the regulated +20 VDC goes directly to the collector of the final RF stage in this module, Q3. When the switch is in the TUNE position, the +20 volts must go through R1 (just below S6) before going to Q3. This limits the current through Q3, thereby decreasing the RF output of the module. This switch is here to protect the tunable filter during the tuning operation.

Control, thermal/detector modulation percentage/coaxial relay/control keyer inhibit A7 (refer to foldout 4)

Foldout 4 is the schematic for the A7 module. There is a lot happening in this module; we will start with the coaxial relay (E/L relay) control circuit.

The E/L relay control circuit energizes the E/L relay if it receives a high on the VSWR-LPA line or a low on the high voltage (HV) sample (LPA) line. Either of these conditions indicates a situation that would require bypassing the LPA.

If the VSWR *exceeds* 3:1, you want to bypass the LPA to prevent damage. The A6 module puts a high on the VSWR-LPA line causing the E/L relay to energize. Whenever you energize a relay that has power on it, you run the risk of arcing on the relay contacts. You need to remove the RF during the energizing of the E/L relay to protect the contacts from arcing. Notice that either problem, which caused the relay to energize, did so by causing Q2 to conduct. The low on Q2's base applies back through R5, through C2 for a split second to the multivibrator circuit. This causes the multivibrator to become momentarily unstable and apply a high on the keyer inhibit line to inhibit keying and removes the RF from the E/L RELAY for the time it takes the relay to energize.

Control radio frequency/modulator A6 (refer to foldout 5)

The schematic of the A6 is in foldout 5. It is in the 50-W configuration. This module develops the APC voltage. The APC voltage maintains the output at 10 W or 50 W depending on the configuration. The A6 also develops the LPA FWD-RVS PWR indication (pin 10) that goes high if the LPA VSWR *exceeds* 3:1.

Lines coming from the LPA are positive DC voltages that are inversely proportional to the RF output level. These DC voltages apply to an analog OR gate made up of CR5, CR6, CR7, CR8, and CR9. The OR gate allows only one of the 5 inputs to control the output to AR1 pin 2. To develop the APC voltage, only the least positive voltage goes through the gate and is used.

Next we will see how the APC develops in the 50-W mode. In regular 50-W mode operation, the LPA FWD PWR input to the OR gate is the least positive so it is in control of the output. Follow the LPA FWD PWR line in through to pin 2 of AR1. AR1 amplifies and inverts the voltage; Q3 amplifies and inverts the voltage again. At this point, the signal is the APC voltage.

If the 50-W output decreased for some reason, the feedback from the LPA would increase (inversely proportional). This increase in voltage goes in to AR1. AR1 amplifies the change and inverts it into a decrease. The decrease causes Q3 to increase in conduction, which causes a more positive APC voltage out. The increase in the APC would increase the gain of the A10 (driver section) to bring the output back up to 50 W.

024. CM–300 and CM–350 transmitters

The CM–300 series of radios are new to the career field and are upgrades to the existing GRT–, GRR–, and GRC– series systems that have been used by the Air Force for decades. They allow remote access and provide a user-friendly interface for maintenance or general control options. The transmitter versions of the CM–300 family are listed below:

- CM–300 (V2) low power UHF digital transmitter (UDT) with adjustable power out from below 2 W up to 12 W.
- CM–300 (V2) low power VHF digital transmitter (VDT) with adjustable power out from below 2 W up to 12 W.
- CM–350 (V2) high power VHF digital transmitter with adjustable power out from below 12 W up to 35 W.

Equipment description

The CM–300/350 (V2) series VHF and UHF digital transmitters provide line-of-sight double sideband (DSB) AM transmission of voice in the VHF and UHF frequency bands used in air traffic control operations. The transmitters operate in the VHF frequency range of 112.000 to 150.000 MHz in 25 kHz or 8.33 kHz channel spacing and the UHF frequency range of 225.000 to 399.975 MHz in 25 kHz channel spacing. They are designed for deployment in fixed-station air traffic control environments and provide air-to-ground voice communications. They support legacy analog audio and Voice over Internet Protocol (VoIP) digital audio.

The VHF and UHF transmitters have the same physical dimensions and are each enclosed in a rack-mounted housing. The front panel includes the operating controls, indicator lights, maintenance data terminal (MDT) interface, and local audio interfaces. The rear panel includes the power inputs, the master power switch, RF connections, remote audio (analog and VoIP), and control interfaces.

The operating functions are controlled by an internal processor. The operator can select the operating frequency, make adjustments, and monitor various transmitter functions using the front panel controls or an MDT device. Whichever the source, the processor monitors the inputs, changes the configuration of the transmitter accordingly, and displays configuration information on the front panel and MDT.

Operating parameters

Most of the operating parameters between the three transmitters are similar, with only a few major exceptions. The specifications for each model are listed in the table below:

Function	Specification		
	CM–300 (V2) VDT	CM–350 (V2) VDT	CM–300 (V2) UDT
Frequency Range	112 to 150 MHz	112 to 150 MHz	225 to 399.975 MHz
Channel Spacing	8.33 kHz or 25 kHz	8.33 kHz or 25 kHz	25 kHz
AC Voltage	120 V AC/60 Hz	120 V AC/60 Hz	120 V AC/60 Hz
AC Current	4 A maximum 2.3 A nominal keyed	8 A maximum 3.2 A nominal keyed	4 A maximum 2.5 A nominal keyed
DC Voltage	24 V DC	24 V DC	24 V DC

Function	Specification		
	CM–300 (V2) VDT	CM–350 (V2) VDT	CM–300 (V2) UDT
DC Current	10 A maximum 8.5 A nominal keyed	20 A maximum 12.5 A nominal keyed	10 A maximum 9 A nominal keyed
Boot Up/Service Restoral Time	≤ 6 seconds	≤ 6 seconds	≤ 6 seconds
RF Power Output	2 W to 12 W	12 W to 35 W	2 W to 12 W

The CM–300 radio family also has receivers that can be used with transmitters to perform as transceivers. These aspects will be covered in the next few sections along with the legacy receiver and transceiver equipment.

Self-Test Questions

After you complete these questions, you may check your answers at the end of the unit.

022. Transmitter fundamentals

1. What term refers to a transmitter's ability to maintain a constant output carrier frequency?

2. Why are transmitters now designed with the modulation occurring in the amplifier circuits?

023. Very high and ultra high frequency transmitters

1. What is the frequency range of the AN/GRT–21?

2. What is the frequency range of the AN/GRT–22?

3. The LPA amplifies the transmitter signal to how many watts?

4. In what transmitter module is the RF generated?

5. The A9 module multiplies the signal by what factor in the UHF transmitter?

6. The A9 module multiplies the signal by what factor in the VHF transmitter?

7. What is the purpose of the E/L relay when using an LPA?

8. In the A4 module, what do you optimally adjust R41 for when there is no input signal?

9. Why does the UHF multiplier contain one more stage of amplification than the VHF version?

10. What is the purpose of the tune/operate switch?

11. Which module develops the APC voltage?

024. CM–300 and CM–350 transmitters

1. What is the output RF power range for the CM–350 (V2) VDT?

2. What types of audio do the CM–300 transmitter family support?

3. Besides accessing front panel controls, what other way can you select the operating frequency, make adjustments, and monitor various transmitter functions on CM–300/350 transmitters?

3−2. Receivers

While there is certainly much more to learn about receivers than can be presented here, we will cover some important fundamentals in order to build a knowledge foundation with a discussion of a generic receiver before moving on to the AN/GRR–23 and AN/GRR–24 receivers.

025. Receiver fundamentals

"Superheterodyne" is a term that means to mix an incoming signal with a locally generated frequency to produce a signal that is then rectified, amplified, and rectified again to produce audio. As you know, if two waveforms of different frequencies are combined in a superheterodyne mixer circuit, the output produced contains four different frequencies—the two original frequencies, the sum of the two original frequencies, and the difference between the two original frequencies.

Basic receiver characteristics

Superheterodyne may look complicated, but it is required by the AN/GRR–23 and AN/GRR–24 in order to process the various frequencies and operate properly. In this lesson we will cover the receiver's basic block diagram including the RF amplifiers, local oscillator, frequency conversion, image frequency, and intermediate frequency (IF) amplifier. Remember, this is just a basic look at receiver fundamentals.

Figure 3–1 shows the block diagram of a superheterodyne receiver. The RF signal from the antenna passes through an RF amplifier where its amplitude is increased. The local oscillator produces an injection frequency that is a steady and stable RF. The oscillator produces the oscillator frequency, which is multiplied in the mixer/multiplier to produce the injection.

The converter stage, sometimes called the mixer, produces the original frequency, the injection frequency, and two new frequencies. One of the new frequencies is the sum of the two originals and the second of the new frequencies is the difference between the two originals, the IF, which passes through the IF filter.

The IF is amplified in one or more IF amplifiers and then fed to a detector. The detector's output is the intelligence. The AF preamp amplifies and filters the recovered intelligence. Finally, the AF power amplifier boosts it up (or amplifies) to the level required for driving a speaker.

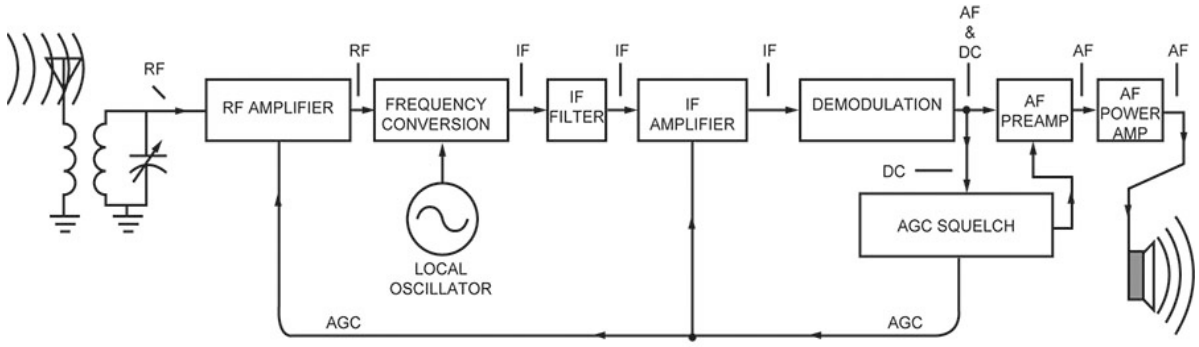

Figure 3–1. AM superheterodyne receiver.

Radio frequency amplifier

The antenna converts the electromagnetic waves from space into an RF signal. Before the input to the RF amplifier, the tuned circuits select a band of frequencies around the desired signal. This is called pre-selection. Pre-selection is a degree of selectivity. After pre-selection, the desired signal, along with a group of nearby signals, goes into the RF amplifier.

At this point, the signal is very small. A strong signal might be only 50 µW. You typically must deal with signals in the femto (.000000000000001) W (fW) range. This means that you have to increase this signal enormously. The RF amplifier stage amplifies this small RF signal to a level high enough to mix with the injection signal.

The RF amplifier has other important functions. For example, it isolates the local oscillator from the antenna system. If you connect the antenna directly to the mixer (frequency converter stage), a part of the oscillator signal might be radiated into space. If other nearby receivers picked up this signal, it would interfere with the reception of the desired transmissions.

Local oscillator

The local oscillator produces a frequency that differs from the desired station frequency by an amount equal to the receiver's intermediate frequency. The local oscillator frequency is one-half or one quarter of the injection frequency.

The IF frequency *does not* change when you change operating frequencies—the local oscillator frequency does. The oscillator may operate above or below the desired station frequency. For instance, if the IF is 10 MHz and the desired signal is 300 MHz, the injection frequency could be 310 MHz or 290 MHz. Suppose you use 290 MHz as your injection frequency and the input frequency is 300 MHz. The local oscillator produces a frequency of 290 MHz. The difference is your 10 MHz IF.

To change the desired received frequency, you need to change the injection frequency so that the new desired frequency again produces the 10 MHz IF. To change your operating frequency from 300 MHz to 330 MHz, you need to change the injection frequency to 320 MHz. The difference would again be the 10 MHz IF.

The incoming RF signal at the antenna is one frequency among many, maybe thousands of possibilities. The IF, on the other hand, is always one frequency. This makes it much easier to design

an amplifier with the required high gain characteristics. The RF amplifier has some gain, but not a great deal. It has to be able to amplify the entire range of possible input frequencies. It is what you would call broadband. The bandwidth (BW) of the IF amplifier is much more narrow. For instance, a military UHF radio operates over an RF range of 225 MHz to 400 MHz with an audio range of 300 to 3,000 Hz. That is an RF bandwidth 175 MHz wide. That means the RF amplifier has to have a bandwidth of at least 175 MHz. Since the highest audio is 3 kHz, your sidebands will be 3,000 up and 3,000 down from the IF, therefore your IF amplifier's bandwidth only has to be 6 kHz wide. Mixing allows you to use a narrowband amplifier in the IF stage of your radio. The vast majority of the amplification in a superheterodyne receiver takes place in the IF section.

The mixing to produce an IF also makes it easier to design a filter with the required high degree of selectivity. The filter at the antenna has to be adjustable to cover the entire range of possible frequencies. In our example, it has to cover a 175 MHz wide range. It is difficult and expensive to use a filter that is capable of tuning across that range and has the required selectivity. On the other hand, the IF filter always has the same center frequency; therefore, you can use relatively inexpensive crystal filters that do have the required high degree of selectivity in the IF section. Because the IF filter is the most selective filter in the radio, it determines the overall receiver selectivity.

To allow selection of any frequency within the range of the receiver, the tuned circuit of the RF amplifier stage and the local oscillator are variable. They are sometimes tuned together. In a commercial broadcast band receiver, you tune just one knob to change frequencies. That one knob changes both the RF filtering circuits and the local oscillator (injection) frequency. Some radios that do not change frequency often, such as air traffic control (ATC) radios, repeaters, and auto-patches, have separate tuning for the two circuits. This allows for more accurate tuning over the life of the radio.

Frequency conversion

The frequency conversion process is the heart of the superheterodyne principle. The superheterodyne receiver has uniform gain and selectivity, as the receiver is tuned over a wide range of frequencies. These advantages are possible because the incoming RF signal is converted to the IF, which has a constant center frequency. This change of frequency takes place in the receiver's frequency conversion stage. There are two basic types of frequency conversion stages used in superheterodyne receivers—the mixer and the converter.

The difference between a mixer and converter is that the mixer requires two input signals: the radio frequency and the injection frequency. A converter has its own self-contained oscillator and requires only one input signal, the radio frequency.

Image frequencies

The early superheterodyne receivers had a problem with image frequencies. An image frequency is an undesired signal that, when mixed in the mixer, produces the correct IF. We will use an example to understand image frequencies.

If your desired frequency is 1,000 kHz and the local oscillator is set at 1,455 kHz, when mixed they produce a 455 kHz IF. Now for argument's sake, say there is another station on 1,910 kHz. The RF amplifier is a broadband amplifier (assume there is no tuned filter in front of the RF amplifier for now) so it amplifies and passes 1,910 kHz as easily as 1,000 kHz. When 1,910 kHz mixes with 1,455 kHz, what is the difference? You see the difference is again 455 kHz. So, there is nothing to stop this undesired signal from producing our desired IF. The output of the receiver would then be both the desired station and the image station. The use of an antenna filter before the RF amplifier stage rejects the image frequency before it gets to the mixer. The image frequency always differs from the desired received frequency by twice the intermediate frequency. Stated simply:

$$\text{Image frequency} = \text{operating frequency} \pm 2 \times \text{IF}$$

It is also possible for any two signals, having sufficient strength and separated by the IF, to produce an unwanted IF signal. For instance, in the example above, the desired signal was 1,000 kHz and the IF was 455 kHz. If two stations are operating nearby at 1,010 kHz and 1,465 kHz and these two signals made it into the mixer stage, they would heterodyne with each other and the result would be 455 kHz. Again, the filter at the input to the RF amplifier will (hopefully) alleviate this problem.

The selectivity of the tuned circuits preceding the frequency converter reduces the strength of these image and unwanted signals. Earlier in this unit, we referred to this as preselection. However, there is a practical limit to the degree of selectivity obtainable in the RF stage. The RF stage *must* have a much wider BW than that of the desired signal.

The ratio of the amplitude of the desired signal to that of the image signal in the RF stage is the signal to image ratio, or the "image rejection" ratio. This is normally expressed in decibels. A large image rejection ratio is required if spurious (unwanted) reception is to be suppressed.

Intermediate frequency amplifier

The receiver circuits you have studied thus far have included the RF amplifier, the oscillator, and the mixer circuits. The amplitude of the signal from the mixer (or converter) is still comparatively weak. The IF is too small to feed directly into a detector stage for demodulation. For this reason, the superheterodyne receiver usually includes one or more stages of IF amplification between the mixer and the detector stage. The block diagram (fig. 3–1) shows that the IF amplifier receives its input signal from the mixer stage through the IF filter. This signal retains the modulation associated with the received RF signal. The IF amplifier then applies the IF signal to the detector stage.

In many ways, the IF amplifier's operation is similar to that of the RF amplifier. The amplified signals, however, are at a lower frequency than for the RF amplifier. Unlike the RF tuned circuits (whose frequency is variable over a wide range), the tuned circuits used in IF amplifiers are fixed at a definite resonant frequency. Since they operate at a fixed frequency, the IF amplifiers have optimum gain and BW characteristics. As a result, the IF section of a superheterodyne receiver provides the majority of amplification.

Extracting and processing audio

When the receiver gets a signal, that signal is at a much higher frequency than the human ear can detect. Now the fun starts. You must now get the received frequency down to a usable frequency through demodulation.

Demodulation

Demodulation (or detection) is the process of recovering intelligence from the modulated wave. The amplified IF, along with its sidebands, goes to the detector. Because the detector is a nonlinear device, heterodyning occurs which causes new frequencies to be developed. Those frequencies are the sum and difference between the applied frequencies. The difference frequency is a reproduction of the intelligence. For instance, if the IF is 10 MHz and its sidebands are 10.001 MHz and 9.999 MHz, what is the difference between a sideband and the carrier? One kHz! Of course, the sum frequencies are there also, but are far from the AF amplifier's bandpass and will not be reproduced. Therefore, you can disregard them. By heterodyning the IF and its sidebands, the result is the original intelligence signal. The signal is developed and sent to the audio amplifier, while filtering out the sum and original frequencies.

In brief, the basic requirements for any type of demodulation are as follows:

- Sensitivity – the demodulator input circuit must be sensitive to the modulation characteristics.
- Nonlinearity must be present to cause heterodyning.
- An RF carrier signal must be present at the input of the demodulator to heterodyne with the sideband signals to reproduce the original intelligence signal.

- Filtering is required at the output of the demodulator to select the desired intelligence signal and reject the unwanted carrier.

Figure 3–2 is a block diagram of an AM detector. Note the modulated carrier input contains three frequencies—the USB, carrier, and LSB. These frequencies heterodyne in the nonlinear device and produce all possible sum and difference frequency combinations. The filter circuit blocks RF signals and passes only the intelligence signal to the output.

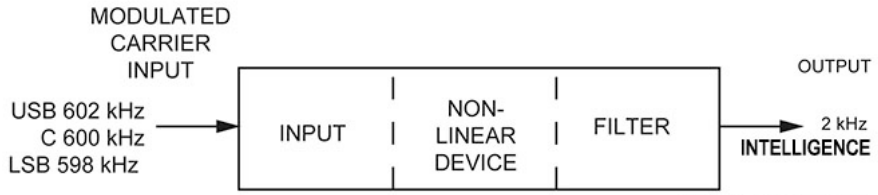

Figure 3–2. AM detector block diagram.

The AM input signal sent to the circuit in figure 3–3 does not contain the low frequencies of the intelligence signal. To acquire the intelligence from an AM signal, it must be demodulated. Demodulation requires using a nonlinear device such as a diode, tube, or transistor. By distorting the AM signal, this device produces the desired intelligence signal.

The intelligence signal can be selected (by a filter), amplified, and used to drive a speaker. The circuit shown selects, rectifies, filters, and thereby detects the amplitude variations of an AM signal.

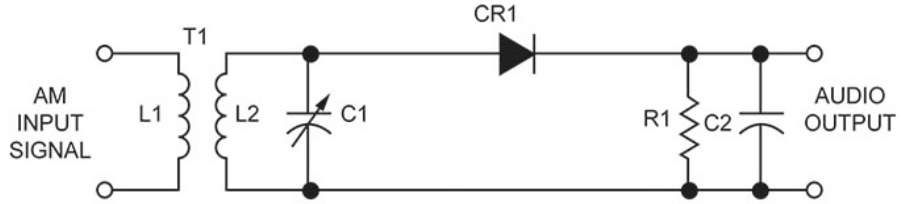

Figure 3–3. AM detector schematic.

In figure 3–3, CR1 rectifies the incoming signal while the R1/C2 combination is a filter. The input signal to CR1 is shown in figure 3–4(A) and appears across C1. CR1 conducts on the positive alternation and cuts off on the negative alternation. This produces the waveform in figure 3–4(B). When CR1 conducts, C2 charges through the low resistance of the forward-biased diode to almost the peak value of the RF signal. When the input signal swings negative, CR1 cuts off and C2 tries to discharge through the resistance of R1. Most of the charge remains on C2; therefore, on the next positive alternation of the input, CR1 conducts and recharges C2 to the peak value. The signal swinging negative again cuts CR1 off, and R1 prevents complete discharge of C2. This goes on while a signal is present and the output voltage waveform, figure 3–4(C), follows the peak amplitude of the signal. This envelope resembles the voltage waveform of the original modulating signal back at the transmitter. In other words, the intelligence signal recreates in the demodulation process. Now you have an AF signal.

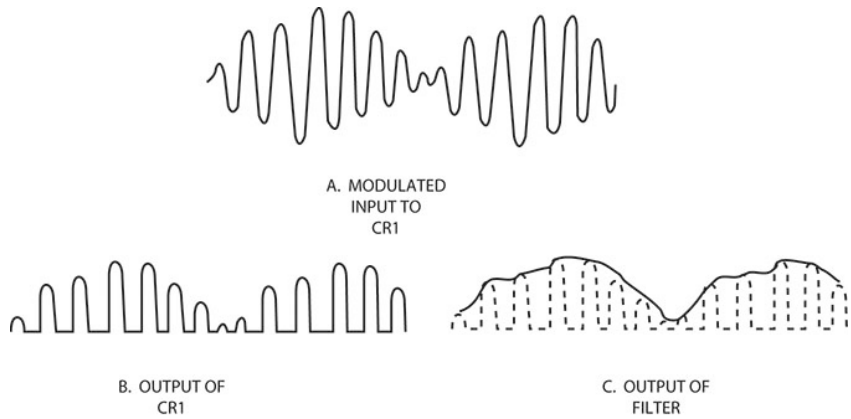

Figure 3–4. Modulated and rectified waveforms.

Diode detectors are simple and handle relatively large signals. They give high-fidelity detection for signals of sufficient amplitude. Their main drawbacks are they provide no power gain and selectivity is affected by loading of the tank, therefore the quality factor of the tank lowers when the diode conducts. Loading minimizes by careful choice of values for the RC filter.

Amplification

The function of the audio amplifier is to amplify the intelligence signal. In most cases, the amount of amplification necessary depends upon the type of output device used. If the output device consists of earphones, only one stage of amplification may be necessary. If the reproducer is a large speaker requiring a great deal of power, several stages may be necessary. In most receivers, the last stage operates as a power amplifier. The output device converts the audio signal to sound waves.

026. Very high and ultra high frequency receivers

Now that we have discussed some basic receiver fundamentals and functions, we are going to look at two specific receivers commonly used in the Air Force—the AN/GRR–23 and AN/GRR–24. These receivers are used primarily to provide air-to-ground and point-to-point communications in support of ATC operations. Keep in mind that, although we are discussing a specific receiver, many of the concepts and functions are the same for most receivers you will see.

Capabilities and limitations of the AN/GRR–23/24

Both the AN/GRR–23 and AN/GRR–24 receivers are identical in physical size and are designed for mounting in a standard 19-inch rack or cabinet. The GRR–23 is capable of reception on any one of 680 channels using the 50 kHz IF crystal filter, or any one of 1,360 channels between 116.000 and 149.950 MHz VHF using the 25 kHz IF crystal filter. The GRR–24 is capable of reception on any one of 3,500 channels using the 50 kHz IF crystal filter, or any one of 7,000 channels between 225.000 and 399.950 MHz UHF using the 25 kHz IF crystal filter. Both radios use amplitude modulation techniques. The table below lists several of the key operating parameters of these radios. A complete list is in TO 31R2–2GRR–112, *Service Instructions and Circuit Diagrams — Radio Receiver Set, Type ANGRR-23(V), -24(V)*.

Characteristic	Specification
Frequency Range (VHF)	116.000 to 149.950 MHz with 680 channels spaced 50 kHz (crystal oscillator), 116.000 to 149.975 MHz with 1,360 channels spaced 25 kHz (oscillator multiplier), and 116.000 to 149.9875 MHz with 2,720 channels spaced 12.5 kHz (oscillator synthesizer).
Frequency Range (UHF)	225.000 to 399.950 MHz with 3,500 channels spaced 50 kHz (crystal oscillator/oscillator multiplier), 225.000 to 399.975 MHz with 7,000 channels spaced 25 kHz (oscillator synthesizer).

Characteristic	Specification
Frequency Accuracy	Oscillator synthesizer ±0.0005 percent after 5-minute warm-up.
Sensitivity	100 milliwatts (mW) into a 600-Ω load with 10 dB signal-plus-noise-to-noise ratio with 3.0 microvolts (μV) VHF/UHF signal modulated 30 percent ±5 percent at 1 kHz applied to antenna input from 50-Ω source.
IF Output	125 millivolts (mV) AC with 3.0 μV signal modulated 30 percent
Audio Output	Two 100 mW 600-Ω unbalanced ungrounded transformer outputs.
Audio Frequency Response	Not more than +1 dB and –2 dB from 300 to 3,000 Hz.
Automatic Gain Control	Output will not vary more than 3 dB as 6 μV signal modulated 30 percent ±5 percent is increased to 1 V.
Squelch	Output muted pending carrier application of not greater than 3.0 μV with squelch sensitivity at maximum and not less than 50 μV at minimum.

Theory of operation

We will begin with a quick look at the basic signal flow of the receiver. We will conclude with a more in-depth look at some of the individual modules.

Basic signal flow (refer to foldout 6)

Foldout 6 depicts the wiring block diagram; refer to it as we discuss the basic signal flow. The antenna connects to the antenna coupler A7. The antenna coupler allows two receivers to connect to one antenna. The tunable filter FL2 provides pre-selection (elimination of all but a small band of frequencies around the desired frequency) and image frequency rejection. The mixer/multiplier A2 contains an RF amplifier that improves sensitivity. The signal from FL2 couples into an RF amplifier located in the mixer/multiplier A2 module. The amplifier's output couples into the mixer portion of the mixer/multiplier A2. The oscillator synthesizer A1 produces either one-half or one-fourth of the injection frequency (one-half for VHF; one-fourth for UHF). The multiplier in the A2 increases the output frequency of the oscillator to the injection frequency. The output of the multiplier and A2's RF amplifier combines in the mixer. The output of the mixer portion of the mixer multiplier A2 is the IF. Since the IF for both VHF and UHF is 20.6 MHz, the radios are the same from the A5 module on. You only replace the A7, FL2, and the A2 with different versions when switching between UHF and VHF.

The IF from the A2 goes to the A5 module, which can be either a noise limiter or a buffer amplifier. The noise limiter module installs in receivers when needed to blank radar pulses; otherwise, the buffer amplifier is installed and provides impedance matching and isolation for crystal filter FL1. This filter (FL1) is the most selective filter in the radio so it determines overall receiver selectivity. Output from FL1 is sent to the IF amplifier and detector A6. The A6 module provides most of the amplification for the receiver, providing at least 94 dB gain and contains the detector circuit. The output of the detector is a DC voltage and, if the input is modulated, the extracted intelligence (AC). The AC and the DC goes to the preamplifier AF/AGC (automatic gain control)-squelch A3 module. The AC portion travels to the preamplifier section of the A3 where it is amplified and filters to set the audio frequency response at the desired 300 to 3,000 Hz. The preamplifier provides an output to the front-panel MAIN (R2) and PHONE (R3) adjustments. The audio, split at the potentiometers, goes to the two inputs of the audio amplifier A4. The A4 increases the amplitude of the audio signals to the level determined by the settings of R2 and R3.

The DC portion of the detector output applies to the AF/AGC-squelch section of the A3 module. It is amplified and processed into the AGC voltage. The AGC voltage maintains a constant audio output with a varying RF input. The AGC voltage controls the gain of the RF amplifier in the A2 module and the IF amplifier in the A6 module. If the RF signal and AGC voltage increase in strength, there is a decrease in the gain of the RF and IF amplifiers so that the output stays constant. The AGC voltage is also used in the squelch circuit to determine the RF signal strength. If the signal is *greater than* the

squelch threshold, the audio goes to the A4 module. If the signal is *below the threshold*, the audio does not go to the A4 module. The threshold sets by the squelch control R1 on the front panel. The power supply PS1 converts the AC input to a regulated +18 VDC that compensates for changes in the AC input or changes in the load. PS1 also contains the automatic battery switchover, battery charger, and overcurrent protection circuits.

Individual modules

Keep in mind that this discussion is not all-inclusive. This section covers some key modules to help you understand the overall equipment operation.

Ultra high frequency mixer/multiplier A2 (refer to foldout 7)

As stated previously, the signal goes through the antenna coupler and the tunable filter FL2. From the tunable filter, the signal goes to the A2 module. The A2 module is different in the UHF and VHF versions. We will look at the UHF version.

Foldout 7 is the schematic diagram for the UHF mixer/multiplier A2. The RF comes in at P3 (shown on the right side of the schematic) and goes to a tuned inductive/capacitive (LC) circuit made up of L10 and C30, which is tuned, from the front of the module, for the operating frequency. From the tuned LC circuit, the RF couples into G1 of the RF amplifier Q7. RF amplifier Q7 improves the receiver's sensitivity. The RF leaves the RF amplifier on the drain and is sent to a tuned LC circuit made up of L12 and C35, which is tuned to the operating frequency. The mixer Q8 mixes the RF signal with an injection signal to produce the IF. Before you can produce the IF you must have the injection frequency. The oscillator synthesizer A1 provides one-quarter and one-half of the injection frequency. This injection frequency comes into the A2 at J1 (left side of the schematic). Transistor Q1 is biased in its nonlinear region so it produces harmonics. On Q1's collector, you find the fundamental frequency that applies to its base, and many harmonic frequencies. By tuning the output of Q1 to the fourth harmonic with C12, only the fourth harmonic passes to Q2. Quadrupler Q1 multiplies the oscillator frequency (80.15 MHz for example) up to the injection frequency (320.6 MHz in our example).

The mixer Q8 is a non-linear device with two signals (the incoming RF and the injection frequency) applied to it; therefore, the output is the two originals, the sum of the two originals and the difference between the two originals. The output of Q8 tunes to pass only our IF—20.6 MHz in this radio. For example, with an injection frequency of 320.600 MHz and an operating frequency of 300.000 MHz, the outputs of Q8 are 300.000 MHz, 320.600 MHz, 620.600 MHz, and 20.6 MHz. The difference frequency (20.6) passes and other frequencies are blocked.

Intermediate frequency amplifier and detector A6 (refer to foldout 8)

Foldout 8 is the schematic diagram for the A6 module. The A6 has four cascaded common-emitter amplifiers (three of which are AGC controlled) and a transistor positive peak detector (PPD). This module provides most of the receiver's amplification with a minimum 94 dB of gain.

Transistors Q1, Q2, Q3, and Q4 amplify the IF signal from FL1. From the collector of Q4, the main signal flow is to the base of Q6. The first three stages of amplification are AGC controlled. The AGC voltage comes into this module on P1 pin 9. The AGC voltage develops in the A3 module and is a DC voltage that is directly proportional to the received RF at the antenna. Of course, if the RF at the antenna increases, you want the gain to decrease so that the volume at the speaker stays approximately the same. The IF signal goes passed buffer Q5 and out J2 of the A6 card to the back of the radio at J10; between J2 and J10 is a half-split method to troubleshoot a loss of the signal.

The 20.6 MHz IF signal goes to the detector Q6. The detection process results in a DC component that is directly proportional to the signal strength and an AC component that is the extracted intelligence. At this point, however, it is too weak to use and contains a lot of noise. In the A3 module, you filter out most of that noise and amplify the intelligence.

Preamplifier, audio frequency/automatic gain control-squelch A3 (refer to foldout 9)

The preamplifier, AF/AGC-squelch A3 module develops the AGC voltage, performs the squelch function, determines the AF response, compresses the audio, and amplifies the audio signal. Foldout 9 is the schematic diagram for the preamplifier, AF/AGC-squelch A3 module. The signal from the A6 comes in at P1 pin 12. It is made of AC and the DC components. Follow the signal from pin 12 to the left through E1. The signal goes to the base of Q1. Notice C1 provides a direct path for degenerative feedback for AC only; therefore, this circuit only responds to the DC component. This circuit develops the AGC and squelch functions.

Notice the signal flows from Q1 to Q2's emitter. Q2's base voltage regulates by VR1; therefore, it only responds to changes in its emitter. The DC voltage goes to Q3, which controls Q4, which, in turn, controls Q5. The voltage on the collector of Q5 is the AGC voltage for the radio; it ensures a constant audio output with varying RF input signal strength. This voltage leaves this module on pin 14 and is sent to the RF amplifier in the A2 module and the IF amplifier in the A6 module.

Suppose that an aircraft has flown over the base and is heading away from you. The signal slowly decreases in strength. You want the volume at the speaker to remain relatively constant. As the signal decreases, the voltage in at P1 pin 12 goes steadily less positive. This voltage goes to Q1, causing a steady decrease in its conduction. As Q1's conduction decreases, the voltage to Q2's emitter slowly decreases, causing its conduction to increase. The voltage on Q2's collector slowly decreases, causing Q3's conduction to slowly increase. This causes the voltage to Q4's base to decrease, causing Q4's conduction to decrease, which also causes Q5's conduction to decrease. Finally, this causes the AGC voltage to decrease. You may have noticed that the voltage started as a decrease and finished as a decrease. The difference lies in the amount of decrease. The voltage at P1 pin 12 (before amplification) typically varies between 2.5 and 5.0 VDC whereas the AGC voltage (after amplification) typically varies between 1.5 and 10 VDC. When you amplify a DC voltage, you are often amplifying the change in the voltage, not the voltage itself.

The squelch circuit cuts off the receiver's audio output if the RF signal is too weak and allows the signal to reproduce when the RF signal strength meets or exceeds a predetermined level.

027. CM–300 receivers

The transmitter section described some general aspects of the CM–300 radio systems. All of the frequency and channel spacing information described in the transmitter specification information relays to the receivers. A big difference is that there is only one VHF and one UHF receiver model; the CM–300 (V2) very high frequency digital receiver (VDR) and the CM–300 (V2) ultra high frequency digital receiver (UDR).

There are very few differences between these digital receivers and the AN/GRR–23/24 receivers. The audio frequency response is still 300 Hz to 3 KHz. Image frequency is still eliminated in the front of the receiver. The IF is different between receivers but the process of extracting the intelligence is still the same as it was for the AN/GRR–23/24 receivers.

Equipment description

The CM–300 (V2) series VHF and UHF digital receivers provide line-of-sight DSB-AM reception of voice in the VHF and UHF frequency bands used in air traffic control operations. The receivers can be used with DSB-AM transmitters operating in the VHF frequency range of 112.000 to 150.000 MHz in 25 kHz or 8.33 kHz channel spacing and the UHF frequency range of 225.000 to 399.975 MHz in 25 kHz channel spacing. The receivers are designed for air traffic control, fixed-station environments, and provide air-to-ground voice communications. They support legacy analog audio and VoIP.

The VHF and UHF receivers have the same physical dimensions and are each enclosed in a rack-mounted housing. The front panel includes the operating controls, indicator lights, MDT interface,

and local audio interfaces. The rear panel includes the power inputs, the master AC power switch, RF connections, remote audio (analog and VoIP), and control interfaces.

The operating functions are controlled by an internal processor. The operator can select the operating frequency, make adjustments, and monitor various receiver functions using the front panel controls or an MDT device. Whichever the source, the processor monitors the inputs, changes the configuration of the receiver accordingly, and displays configuration information on the front panel and MDT.

Operating parameters

Most of the operating parameters between the two receivers are similar with only a few major exceptions. The specifications for each receiver are listed in the table below:

Function	Specification	
	CM–300 (V2) VDR	CM–300 (V2) UDR
Frequency Range	112 to 150 MHz	225 to 399.975 MHz
Channel Spacing	8.33 kHz or 25 kHz	25 kHz
AC Voltage	120 V AC/60 Hz	120 V AC/60 Hz
DC Voltage	24 V DC	24 V DC
Boot Up/Service Restoral Time	≤ 6 seconds	≤ 6 seconds
IF Selectivity 25 kHz: 8.33 kHz (VHF only):	 ±9 kHz minimum, −6.0 dB ±25 kHz maximum, −60.0 dB ±3.5 kHz minimum, −6.0 dB ±8.33 kHz maximum, −60.0 dB	 ±9 kHz minimum, −6.0 dB ±25 kHz maximum, −60.0 dB N/A
Sensitivity	≤ -102 dBm	≤ -102 dBm
Image Rejection	> 77 decibels relative to the carrier (dBc)	> 67 dBc

The CM–300 radio family receivers can also be used in a transceiver configuration. That information will be covered in the next section along with the legacy transceiver equipment.

Self-Test Questions

After you complete these questions, you may check your answers at the end of the unit.

025. Receiver fundamentals

1. What term describes the narrowing down of input frequencies for a receiver, with tuned circuits selecting a band of frequencies around the desired signal?

2. What happens when you connect the antenna directly to the mixer?

3. If a receiver has an IF of 10 MHz and the desired signal is 290 MHz, what could the two injection frequencies be?

4. In what section does most of the superheterodyne receiver amplification take place?

5. What component determines the overall receiver selectivity?

6. What is the difference between a mixer and a convertor?

7. What is an image frequency?

8. What receiver circuit has tuned circuits, fixed at a definite resonant frequency?

9. Define demodulation.

10. What modulation characteristic must be present for heterodyning to take place?

11. What are the main drawbacks of diode detectors?

026. Very high and ultra high frequency receivers

1. What is the frequency accuracy for the AN/GRR–23 and AN/GRR–24 receivers?

2. What component allows two receivers to connect to one antenna?

3. What does AGC do?

4. In the UHF A2 module, the quadrupler multiplies the oscillator frequency to what level?

5. What receiver module provides most of the receiver's amplification?

6. Which module develops the AGC and squelch functions?

7. Explain the function of a squelch circuit in a receiver.

027. CM–300 receivers

1. What is the difference in channel spacing between the UHF and VHF CM–300 receivers?

2. What operations can be done from the receiver front panel or MDT device?

3−3. Transceivers

This section covers the principles for a transceiver—a single radio that transmits and receives. Since you have already covered transmitter and receiver principles, you have already learned 90 percent of the AN/GRC–171/211 principles. All we will do now is point out the practical considerations of putting a transmitter and a receiver in one box and making them work in unison.

Like the case with all electronics systems, the better your knowledge of a system, the easier it is to learn another. We will try not to repeat material, although some repetition is inevitable.

028. Transceiver fundamentals (refer to foldout 10 and 11)

This unit will look at transceiver principles. There will be a specific look at the AN/GRC–171 and AN/GRC–211, but the principles of operation are valid for most transceivers. Refer to foldout 10 and 11 for the wiring diagram and a line drawing of the front, top, back, on the AN/GRC–171 transceiver. Because the differences between the AN/GRC–171 and the AN/GRC–211 are few, you can use the same foldouts in discussing both transceivers.

The AN/GRC–171 and AN/GRC–211 radiosets are transceivers designed for air traffic control communications sites and provide fixed and portable, point-to-point, and ground-to-air communications. The AN/GRC–171 is the UHF version, and the AN/GRC–211 is the VHF version. They provide AM, narrow, and wideband communications on any of the available channels. Both are completely solid state and can be controlled remotely or locally. Tuning the transceivers takes a maximum of (but usually less than) 10 seconds.

The transceivers have front panel test points and a front panel meter for maintenance and troubleshooting. Their size and shape allow them to fit in a standard 19-inch rack; the standard installation mounts the transceiver to slide-out rails. All electrical connections are through connectors mounted on the rear panel of the transceiver. Both transceivers are convection cooled and have a 2-minute warm-up time.

Both transceivers operate from single phase, 95 to 132 and 189 to 264 V AC power with a frequency of 47 to 420 Hz. They can also operate from a 22 to 30 volts DC supply (commonly a battery). The transceivers consume 450 W when keyed and 150 W when unkeyed.

Operational characteristics

The transceiver's UHF version (AN/GRC–171) can communicate on any one of 7,000 available channels spaced 25 kHz apart in a range from 225 to 399.975 MHz. The VHF version (AN/GRC–211) can communicate on any one of 1,440 available channels spaced 25 kHz apart in a range from 116 to 151.975 MHz.

The following table lists some operational characteristics of the two transceivers. Unless stated otherwise wise, the application column refers to both radios. For a complete list of the functional differences of the two transceivers, refer to 31R2–2GRC211–2, table 4–1.

Function	Application
Frequency stability and accuracy	.0005 percent.
Duty cycle, receive	Continuous, unattended.
Duty cycle, transmit	UHF – 90 percent, 9 minutes (90 percent modulated with a 1 kHz tone) transmit, 1 minute receive. VHF – Continuous, unattended.
Sensitivity	UHF – 3 μV, 30 percent mod with 1 kHz for a 10 dB drop. VHF – 1.5 μV, 30 percent mod with 1 kHz for a 10 dB drop. (Improvement is due to the RF preamplifier used in the VHF version only.)
Selectivity	As determined by the crystal filter A3FL1, options are: • ±30 kHz, wideband (WB) filter = 100 kHz channel spacing (UHF only). • ±18 kHz, narrowband (NB) filter = 50 kHz channel spacing (UHF only). • ± 10 kHz, NB filter = 25 kHz channel spacing (UHF and VHF).
Normal audio output	• UHF: At least 0.1 W into a 600 Ω load when receiving a 3 μV, 30 percent modulated (1 kHz tone) signal. (Local and remote audio outputs). • VHF: At least 0.1 W into a 600 Ω load when receiving a 1.5 μV, 30 percent modulated (1 kHz tone) signal. (Local and remote audio outputs).
Wideband audio output	• UHF: At least 0.5 V across a 10 kilo ohms (kΩ) load when receiving a 3μV, 30 percent modulated (1 Hz tone) signal. • VHF: At least 0.1 W into a 600 Ω load when receiving a 1.5μV, 30 percent modulated (1 kHz tone) signal. (Local and remote audio outputs).
Normal receive audio frequency response	300 to 3,000 Hz.
Wideband audio frequency response	16 to 25,000 Hz.
Output audio distortion	10 percent or less when receiving a 1 volt AC input RF signal modulated at 30 percent and 100 milliwatt output level.
Output power	UHF – 20 W. VHF – 25 W.
Output load VSWR	1.3:1 or less normal, 3:1 maximum.
Automatic load control (ALC)	UHF – ALC maintains 20 W out (–1 dB, +2 dB) into load causing ≤ 3:1 VSWR. VHF – ALC maintains 25 W out (–0 dB, +1 dB) into load causing ≤ 3:1 VSWR.
Modulation	UHF – 90 percent. VHF – 85 to 95 percent.
Modulating (transmit) audio frequency (normal audio)	300 to 6,000 Hz.

Function	Application
Modulating audio frequency (data)	16 to 25,000 Hz.
Modulation distortion	10 percent normal, 15 percent or less with maximum compression and limiting.
Sidetone	A detected sample of the modulated RF output is provided at the normal receive audio outputs during the transmit function. Tells the operator the transceiver is functioning at some level.
Harmonic and spurious outputs	At least 80 dB below carrier level.
Keying	Remote: • Main audio center tap • Ground or voltage keying (6, 26, 48 VDC). • Push-to-talk (PTT) keying (ground). • A9 module keying • Voltage (6, 26, 48, 100 VDC). • Current (20 to 60 mA). • Voice operated exchange (VOX) (.245 V root-means-square [RMS], 300-3000 Hz). Local: • Carbon microphone. • Dynamic microphone. • PTT/Carrier test switch.
Key inhibit	Any ground into the key inhibit input prevents transmitter from keying and shuts off the READY lamp (simulates RF filter fault, inhibits key 2).

Notice that there are more similarities than differences. Do not forget this in the upcoming discussions of the two transceivers.

029. Very high and ultra high frequency transceivers (refer to foldout 12)

Foldout 12 is a block diagram for the AN/GRC–171/211 transceivers. Before you dive into a discussion of the transceivers, we need to define some of the differences between them. In the previous paragraphs, we outlined some of the transceivers operational parameters and pointed out many of their differences while doing that. However, there are some functional differences that you have not yet covered which are described below.

- The RF filter module (A7) for UHF has a ±1.5 MHz BW and the VHF version has a ±1.1 MHz BW.
- The reflectometer (A8A7) is not used in the VHF version of the A8 module.
- The RF preamplifier (A10A5) is used in the VHF version only; it is responsible for the VHF versions superior sensitivity.
- The UHF radioset control, C–7999, produces 15 BCD lines of information, and the VHF version, C–10902, produces 13 BCD lines of information.

These circuit card variations are marked on the block diagram with black circles. While this appears to be a significant difference, the similarities far outweigh the differences.

Despite functioning as both a transmitter and a receiver, some functions obviously do not need duplication. For example, why have two separate frequency synthesizer modules? Why have two separate power supplies? The transmit and receive functions share these modules.

The block diagram is split into a transmit section on the top and a receive section on the bottom. The shared modules—power supplies (A5 and A6), the chassis (A10), and the radioset control—are shown in the middle of the page between the previous two sections. Because there is a lot of overlap, you do not need to be concerned with identifying modules as either transmit or receive only.

Transmit section

Most transceivers are in receive mode far more than transmit mode. The transceiver sits in receive mode until the operator picks up the microphone and keys it. At that time, the transceiver transitions from receive mode to transmit mode. The operator speaks into the microphone, and his or her voice is amplified and used to modulate the carrier. The modulated carrier is amplified, controlled, and then transmitted. When the operator unkeys the microphone the transceiver transitions back into receive mode. Next, we will cover how these things occur in this transceiver.

Transmit audio and keying

Locate the audio input, mic input, and the data input on the upper left side of foldout 12. These signals are the intelligence inputs used to modulate the carrier. The audio input is usually coming from a remote operator. Along with this audio, there is often a keying signal; the input circuits route the keying signal up to the PTT keyer part of the A4 module. Although the A4 module is a single card internally, note that there are two A4 blocks on the diagram—one for transmit and one for receive. There are separate receive and transmit audio amplifiers and filters.

Keying circuits

The PTT keyer converts any keying input to a ground out to the local remote switch. The keying input can be either ground keying or a DC-keyed voltage. The voltage can be 6, 26, or 48 VDC. The option in use (ground, 6, 26, or 48) is selected by soldered-in jumpers on the card itself. Regardless of the type of keying input, the output is a ground when keyed.

The radio can also be keyed by a remote microphone, which puts a ground on the REMOTE MIC KEY input to the local remote switch.

The keyer module A9 converts loop keying inputs to a ground out to the local remote switch. The voltage loop input can be 6, 26, 48, or 100 VDC. The current loop can be anything from 20 to 60 mA DC and the audio loop is any audio greater than .245 volts RMS between 300 and 3,000 Hz. The audio loop keying is more commonly referred to as VOX keying. Regardless of the type of keying input, the output is a ground when keyed to the local remote switch.

The LOCAL KEY input is a simple ground when keyed. It also goes to the local remote switch, but on the local side; whereas the other inputs are all to the remote side.

Whatever keying input is being used, it winds up at the local remote switch as a ground when keyed. From the local remote switch, the keying signal goes to the KEYING CONTROL circuits in the A4 module. The KEYING CONTROL circuits convert the ground when keyed into two keyed lines, key 1 and key 2. Both key 1 and key 2 are low for transmit and high for receive. The following table shows where the two keyed lines are applied.

Key 1 is applied to	*Key 2 is applied to*
Transmit/receive (XMT/RCV) switch in the A7	ALC circuits in the A8
Phase locked loop (PLL) in the A2	XMT/RCV switch in the frequency synthesizer A2
Receiver mute switch in the A3	
Sidetone mute switch	
Optimal A9 squelch operated relay	

The only difference is their timing. Key 1 is fast attack slow release (FASR), while key 2 is slow attack fast release (SAFR). Fast attack means that key 1 goes low quickly when keyed; slow attack means that key 2 goes low after a small (milliseconds) delay. Fast release means that key 2 goes high quickly when unkeyed; slow release means that key 1 goes low after a small (milliseconds) delay.

The reason for two key lines is to ease in to transmit from receive mode and vice versa. When keying the radio:

- Key 1 disconnects the antenna from the receiver module A3 using the XMT/RCV switch in the A7, changes the frequency of the frequency synthesizer's phase locked loop in the A2, and shuts off the receiver using the mute switch in the A3. This is to prepare the radio to transmit.
- Key 2 activates the ALC voltage in the A8 to activate the power amplifier and connects the output of the frequency synthesizer to the power amplifier A8 using the XMT/RCV switch in the A2 module. This actually causes the transmitter to start transmitting.

The power amplifier cannot amplify the RF until the receiver is deactivated; if not it would quickly destroy the receive circuits. This is why there is a time delay between key 1 and key 2; it gives the circuit time to get ready to transmit before you actually transmit.

This also works in reverse. When the radio is unkeyed, the transmit circuits must be completely unkeyed (OFF) before the receiver is activated. When the radio is unkeyed, key 2 goes high first because of its fast release. Key 2 deactivates the ALC circuits in the A8 causing maximum attenuation of the RF signal in the A8. At the same time key 2 disconnects the RF signal at the input to the A8 module by switching the XMT/RCV switch in the A2 module to receive mode. It sends the frequency synthesizer output to the A3 module. After a small delay, key 1 disconnects the antenna from the power amplifier A8 and connects it to the A3 module using the XMT/RCV switch in the A7 module. At the same time, key 1 causes the frequency synthesizer to develop the injection frequency required by the receiver to function properly. Meanwhile, the key 1 is also activating the receiver using the mute switch in the A3 module.

Key inhibit

Now that you know what the key lines 1 and 2 do, go back to the A4 module. Notice that the keying control circuits have two inputs on the lower left labeled PLL FAULT and RF FILTER FAULT. These are both normally high low for a fault. If there is a problem detected in the A2 phase locked loop circuit, the PLL fault goes low preventing keying of key 2. Since key 2 actually causes the radio to produce the RF output, the radio will not produce an audio output if there is a fault condition. Why do we care?

Hypothetically, say that the PLL is producing a signal that is outside of the RF filters BW. In this scenario the A8 amplifies the signal and passes it into the RF filter. The RF filter sees the incorrect frequency and attenuates the entire signal; the RF filter is not designed to dissipate that much power, it would destroy itself in the process. In this scenario you started with a bad PLL and ended up with a damaged PLL and RF filter. If you inhibit keying (key 2 specifically), you can prevent this snowballing of malfunctions.

Audio section

Now that you have gotten the radio keyed, it must now process the audio. The audio can come from a variety of sources. The most common is from a remote input, often the control tower cab. During tactical deployments, the radio is often placed on a table and the local microphone, carbon or dynamic, is plugged into the front of the radio. In this case the microphone input goes straight to the compression amplifier. There are other times when the intelligence to be transmitted will not be audio, as you know it, but a squarewave signal known as data. It has a wider BW than the normal filters, so the data input bypasses the normal audio filters.

Follow the normal audio first since it is the most commonly used. It is sent to the input circuits that provide impedance matching and route the keying signal and the audio signals to the appropriate circuits.

The compression amplifier keeps the modulation percentage constant. Like any other compression amplifier, it keeps the audio level relatively constant so that whatever percentage of modulation you set up (i.e. 90 percent) stays relatively constant when variations occur in the audio input levels. An operator with a strong voice should not modulate the carrier significantly more than an operator with a weak voice.

The low pass (LP) and high pass (HP) filters determine the audio frequency response. For this system the transmit audio frequency response is 300 to 6,000 Hz. The LP filter determines the upper cutoff (6,000 Hz), and the HP filter determines the lower cutoff (300 Hz). The data input signal has a wider BW, so it bypasses the normal audio filters and goes straight into its own high pass and low pass filters. The low pass filter section also uses a clipper circuit to prevent over modulation when using the data input. The frequency response of the data circuit is 16 Hz to 25 kHz. The output of the LP filter then goes into the A8 module.

The modulator section of the A8 module simply amplifies the audio one last time and then applies the audio to the RF preamp/MOD section of the A8 module. The RF preamp/MOD is where the audio actually modulates the carrier.

Radio frequency section

Now the radio has keyed and the audio processed, it needs to develop the RF.

The frequency synthesizer A2 produces the carrier during transmit and the injection frequency during receive. The transition between the two occurs automatically, so retuning is not necessary when going from receive mode to transmit mode and vice versa. The frequency generates directly; there are no frequency multipliers in this system. When the radio is keyed, the phase locked loop starts developing the operating frequency first. After a short pause, the output of the PLL goes to the A8 module.

The unmodulated RF goes to the RF preamp/MOD section of the A8 module. This is where the RF modulates. The modulated RF then goes to the RF predriver/ALC attenuator. The RF predriver/ALC attenuator is a combination of an RF amplifier and an attenuator. The ALC voltage controls the attenuator. The ALC voltage is a positive DC voltage; the attenuation in the predriver/ALC attenuator is directly proportional to the ALC voltage. If the ALC voltage increases, the attenuation increases, which means the RF out of the predriver/ALC attenuator would decrease. Conversely, if the ALC voltage decreased, the RF output of the predriver/ALC attenuator would increase.

The RF driver and the RF power amplifier section of the A8 amplify the RF. The reflectometer creates PA forward and PA reflected samples from the RF. PA forward is used for the ALC and test points. PA reflected is used for test points only. The reflectometer is *not* used in the VHF radio.

Next, the RF enters the A7 module and goes to the XMT/RCV switch that acts like a T/R relay. It connects the transmit portion of the radio when the radio is keyed and the receive portion of the radio when the radio is unkeyed.

If key 1 is low (transmit), the XMT/RCV switch routes the RF from the A8 to the RF filter. The RF filter eliminates harmonics that are generated in the A8 module. It has a BW of ±1.5 MHz for the UHF version and ±1.1 MHz for the VHF version. The filter has a normal insertion loss less than 2 dB. If there is more than this, it is probably because the filter is not tuned properly. If the loss is excessive, the A7 module could be damaged.

The directional coupler detects samples of the forward and reverse power. The samples are positive DC voltages that are directly proportional to the signal strength. Notice the sidetone output on the right side of the directional coupler section. This is the audio extracted from the forward power sample in the detection process. If the RF output of the radio is modulated, there is audio out at this

point. The sidetone goes to the receive audio section and routes to the headset and main audio outputs. This sidetone tells the operator that the radio is modulating a carrier that goes to the antenna jack.

The forward power sample from the directional coupler goes back into the ALC circuits of the A8 module where it is amplified into the ALC voltage. The resulting ALC voltage is directly proportional to the output power strength. The ALC voltage controls a positive/intrinsic/negative (PIN) diode attenuator in the RF predriver/ALC attenuator. If the output power increases, the ALC voltage increases and the amount of attenuation increases, which brings the RF level back down to where it is supposed to be.

The antenna reflected power feedback is compared to the antenna forward power in the ALC circuits to monitor VSWR. If the VSWR exceeds 3:1, the ALC increases causing the output RF level to drop to approximately 4 W (4W mode). The PA forward power and the antenna forward power are compared to determine the loss in the RF filter. Notice that the power amplifier forward power sample is taken before the RF filter, and the antenna forward power sample is taken after the RF filter. By comparing the input and the output, the circuits can determine the loss in the RF filter.

If the loss exceeds 2 dB, the ALC circuits drop the output to 4W mode. There is a thermistor mounted on the chassis of the A8 that is not shown on the block diagram. If the thermistor indicates the temperature of the A8 module is greater than 100 degrees Celsius, the ALC circuits go into 4 W mode.

Last, but not least in our transmit path, is the antenna. Connected to the rear panel connector, the antenna radiates our 20 W UHF or 25 W VHF signal into space bound for the opposite station.

Receive section

Foldout 12 also contains the blocks for the receive portion of the radio. The antenna is the input during receive as opposed to the output in transmit. During receive, the transceiver is unkeyed; key 1 and key 2 are both high.

Keying

In changing from transmit to receive, key 2 shifts high first (fast release). Key 2 deactivates the ALC circuits causing the ALC voltage to go to its maximum positive value. This causes maximum attenuation of the signal in the RF predriver/ALC attenuator. Key 2 also causes the XMT/RCV switch in the A2 module to reroute the output of the frequency synthesizer from the A8 to the A3.

Key 1, then, after a small delay and slow release, causes the output of the phase-locked loop to produce the injection frequency instead of the operating frequency. In UHF, the injection frequency is 30 MHz below the operating frequency, and for the VHF version the injection frequency is 30 MHz above the operating frequency. So if the radio is a UHF (AN/GRC–171), the PLL shifts down 30 MHz when key 1 goes high; and if the radio is a VHF (AN/GRC–211), the PLL shifts up 30 MHz when key 1 goes high.

Key 1 also causes the XMT/RCV switch in the A7 module to reroute the RF path from A8 to the RF filter, then from the RF filter to the A3. At the same time, key 1 activates the receiver by deactivating the mute function in the A3 module. At this point, after both key 1 and key 2 have shifted high, the receiver is ready to receive.

Radio frequency section

The antenna connects at the same rear panel jack. The directional coupler has no purpose in normal receiver operation. The RF filter provides preselection and eliminates image frequencies. The XMT/RCV switch routes the RF to the A3 module for UHF or the RF PREAMPLIFIER A10A5 if the unit is an AN/GRC–211 (VHF). If the unit is a VHF version, the preamplifier amplifies the RF from 1.5 µV to 3 µV and applies it to the UHF mixer. If the unit is a UHF version, the RF from the XMT/RCV switch in the A7 module goes directly to the UHF mixer at 3 µV.

Intermediate frequency section

The UHF mixer, used for both VHF and UHF, mixes the incoming signals with the injection frequency. The injection frequency is a signal that is 30 MHz off the desired frequency. The incoming signals are a band of frequencies centered around the desired frequency. The UHF mixer is a balanced modulator; this means that at the output of the two, originals are not reproduced at the output of the mixer. Because of the 30 MHz filter, only the difference frequencies are passed to the 30 MHz IF amplifier. At this point, there is still a band of frequencies around the desired frequency.

The 30 MHz IF signal is filtered again after the 30 MHz IF amplifier by the filter/delay. The signal is amplified once more before being sent to the second mixer. The second mixer makes this a dual conversion superheterodyne receiver. The second mixer has a 19.3 MHz injection frequency. This mixer is also a balanced mixer that means the output contains only the sum and the difference frequencies. The 10.7 MHz crystal filter eliminates all undesired frequencies leaving with the desired signal. Since the crystal filter is the most selective filter in the system, it determines overall selectivity.

The 10.7 MHz second IF is amplified one more time and then goes to the detector/AF amplifier. The detector used is a PPD; therefore, the result is two distinct signals—the audio (extracted intelligence) and the DC (directly proportional to the signal strength).

Audio section

The audio travels to the A4 module and to the compression amplifier. The audio, after compression, is sent to a HP/LP filter combination that sets the receive audio frequency response to 300 Hz - 3,000 Hz. The output of the filters is split, sent to the front panel potentiometers (VOL and RCV AUDIO), and brought back to the A4 for power amplification before leaving the radio. The headset audio is the local audio and can be accessed from the front panel. The output—labeled audio output on the block diagram is the remote audio and is accessed on the rear panel. This remote audio is the main audio output.

Look back at the A4 module's input; notice that the audio passed two junctions before going into the compression amplifier. Follow the first junction; it leads to the bandpass filter that sets up the 16 Hz - 25 kHz bandpass for the data output. The second junction, into the A4 module, ties to a transistor that is tied to ground. This is the squelch control; if it conducts, the normal audio outputs are muted (silenced). To see how the squelch circuit works, we will have to cover the AGC circuit first.

Automatic gain control/squelch

In the A3 module, the detector used is a PPD. The result is two distinct signals—the audio (extracted intelligence) and the DC (directly proportional to the signal strength). You have already seen where the audio is used; the +DC voltage is sent to the AGC amplifier. The AGC amplifier amplifies this +DC voltage that is directly proportional to the signal strength and develops from it four outputs that are each directly proportional to the signal level. They are as follows:

- 10.7 MHz AGC.
- RF attenuator.
- 30 MHz AGC.
- Squelch sample.

The 10.7 MHz AGC and the 30 MHz AGC voltages are simple AGC circuits that decrease the overall gain of the receiver circuit as the incoming RF signal increases. The RF attenuator voltage does the same thing, but it takes effect back in the XMT/RCV switch in the A7 module. During receive, the XMT/RCV switch in the A7 module functions as an RF attenuator in addition to its transmit-receive switching function.

The squelch sample is compared to a squelch reference that is set up with the front panel SQUELCH control. If the squelch sample is greater than the squelch reference, the transistor does *not* conduct. In this case the audio is heard at the speaker. If the squelch sample is lesser than the squelch reference, the transistor does conduct. In this case, the audio is not heard at the speaker because the transistor is grounding the input to the compression amplifier.

This completes the receive portion of the block diagram. There are a few functions left that do not fit into either transmit or receive sections, but are very important. The next section will explain these power and control elements.

Power and control

This section covers the rest of the block diagram. First, we will look at the chassis A10 and the power supplies; then we will look at the servo circuits and the radioset control.

Chassis A10

The chassis is given its own reference designator in this radio. In many systems, it is just the chassis. In this radio, it is the chassis A10.

On the block diagram, locate the following components that are located on the chassis:

- A transformer/rectifier combination that converts the input AC power into an unregulated 25-55 DC voltage.
- In the VHF (AN/GRC–211), the A10A5 is an RF preamplifier in series with the receiver A3 module and the RF filter A7 module.
- Local frequency select (thumbwheels).
- Front panel metering.
- Several front panel controls such as volume and squelch.
- All other modules.

Only the chassis remains if you remove all the other subassemblies. The only thing that is not a part of the chassis or mounted on the chassis is the radioset control C–7999 UHF and C–10902 VHF.

Power supplies

The regulated voltages, positive voltages, negative voltages, and the 100 VDC come from the two power supplies, A5 and A6.

DC-DC converter A5 module

The A5 module contains a switching regulator. The regulating DC-DC converter block is the switching regulator; it produces the regulated +26 VDC.

The (nonregulating) DC-DC converter block is a circuit that converts the regulated +26 into several other voltages including +100 VDC for a PIN diode switch in the RF path. It also converts the regulated into several other voltages (positive and negative) for the A6 module.

Voltage regulator A6 module

The A6 module contains several simple series regulators that produce the indicated regulated voltages. The A6 module uses several 723 voltage regulator integrated circuits.

The power supplies A5 and A6 provide regulated and unregulated voltages used to properly bias every circuit in the radio that requires bias.

Radio frequency filter tuning servo system

The RF filter requires tuning every time the operator changes the operating frequency of the radio. You may remember tuning the receivers and transmitters in technical school. It can take 15 minutes or longer to properly tune the RF filters in these radios. The GRC radios automatically tune when the

operator changes the frequency thumbwheels on the front panel or the radioset control. The servo system does the tuning in less than 11 seconds. However, by today's standards even this is quite slow. This section will show how it works.

Locate the digital to analog (D/A) SERVOAMPLIFIER MODULE A1 on foldout 12. There are two lines between the A1 and the A7. The A1 module controls the servo motor in the A7; the SERVO MOTOR line shows this from the A1 to the A7. The RF filter has a potentiometer mounted on its tuning shaft that develops a DC voltage that represents the physical tuning position of the filter. This is the position feedback (POSN FB) labeled on the block diagram. This voltage tells the servo circuit where the filter is actually tuned or "where you are." The voltage is a DC voltage that varies from a *maximum positive* value to a *maximum negative* value, depending on the filter's tuned frequency. Using the VHF version as an example, the voltage varies from +8 VDC for 152 MHz to –8 VDC for 116 MHz. Since 134 MHz is exactly in the middle (and the change is linear), 134 MHz would equal 0 VDC.

The local frequency select thumbwheels develop BCD information that the radio uses to tune the filter to a desired frequency. Foldout 12 represents the BCD information by the FREQ SEL line going from the local frequency select or from the RADIOSET CONTROL.

The D/A converter converts this digital information to a single analog voltage. This analog voltage represents the frequency that you want to be tuned to or "where you want to be." Using the VHF version as an example again, +8 VDC = 152 MHz, –8 VDC = 116 MHz, and 0 VDC = 134 MHz.

The formula for the voltage (VHF ONLY!) is: Voltage = $\frac{4 \text{ x Frequency} - 536}{9}$

For example, for an operating frequency of 146.790 MHz, the voltage would be:

$$\text{Voltage} = \frac{4 \text{ x Frequency} - 536}{9}$$

$$= \frac{(4 \text{ x } 146.790) - 536}{9}$$

$$= \frac{587.16 - 536}{9}$$

$$= \frac{51.16}{9}$$

$$= +5.7 \text{ VDC}$$

Before you even started, you knew the result should be positive and less than 8 because the frequency is higher than 134 MHz (134 MHz = 0 VDC) and lower than 152 MHz (152 MHz = 8 VDC).

As another example for an operating frequency of 121.800 MHz, the voltage would be:

$$\text{Voltage} = \frac{4 \text{ x Frequency} - 536}{9}$$

$$= \frac{(4 \text{ x } 121.800) - 536}{9}$$

$$= \frac{487.2 - 536}{9}$$

$$= \frac{-48.8}{9}$$

$$= -5.4 \text{ VDC}$$

Before you even started, you knew the result should be negative, but less negative than –8 because the frequency is lower than 134 MHz (134 MHz = 0 VDC) and higher than 116 MHz (116 MHz = –8 VDC).

There are three conditions for the servo systems:

1. Tuning up.
2. Tuned.
3. Tuning down.

The servo amplifier can, by comparing the POSN FB voltage and the analog voltage, determine if the filter is properly tuned or not. If the two voltages are equal, it means that "where we are" is the same as "where we want to be." Therefore, there is no need to change. If, however, the voltages are not equal—"where we are" is not "where we want to be," then we will have to move so that "where we are" *is* "where we want to be."

Compare this to riding an elevator in a tall building. If you want to get to the 5th floor, do you need to go up, down, or get off the elevator? If you are on the 3rd floor, you must go up. If you are on the 10th floor, you must go down. If you are on the 5th floor, you are there; get off. Your feedback in this example would be the floor indicator. If the feedback equals where you want to be, you don't go up or down. If it is greater than where you want to be, you must go down, and if it is less than where you want to be, you must go up.

For instance, if the POSN FB voltage is +5 and the analog voltage is –3, the filter would tune down. As the filter tunes down, the POSN FB goes in a negative direction—+5, +4, +3, +2, +1, 0, –1, –2—until it reaches –3. At this point the POSN FB equals the analog voltage. This is called a *null* seeking servo system because it is seeking the point where there is no (null) difference between its input voltages.

If the POSN FB voltage is +7 and the analog voltage is +3, the filter tunes down. As the filter tunes down, the POSN FB goes in a negative voltage—+6, +5, +4—until it reaches +3. At this point the POSN FB equals the analog voltage.

If the POSN FB voltage is –3 and the analog voltage is –3, the filter is tuned. Since the POSN FB is equal to the analog voltage, the filter is where it is supposed to be, so there is no need for tuning.

The thumbwheels (local or remote) are also used by the oscillator synthesizer to set its PLL frequency.

030. CM–350 transceiver configuration

As with legacy receivers and transmitters, the new digital receiver equipment is typically used in conjunction with a VHF or UHF transmitter as a frequency pair. The CM–300 series receivers and transmitters can be connected to a common antenna, and can be used as a transceiver.

When a transmitter and receiver are connected to a common antenna (fig. 3–5) and the antenna transfer relay (ATR) switch position is set to ATR0, the transmit and receive switching is handled by an internal ATR switch in the transmitter. The ATR switch has the following characteristics:

- ATR1: Connection to ATR connector 1 – NC.
- ATR2: Connection to ATR connector 2 – NO.
- ATRC: Connection to ATR common connector – to antenna.

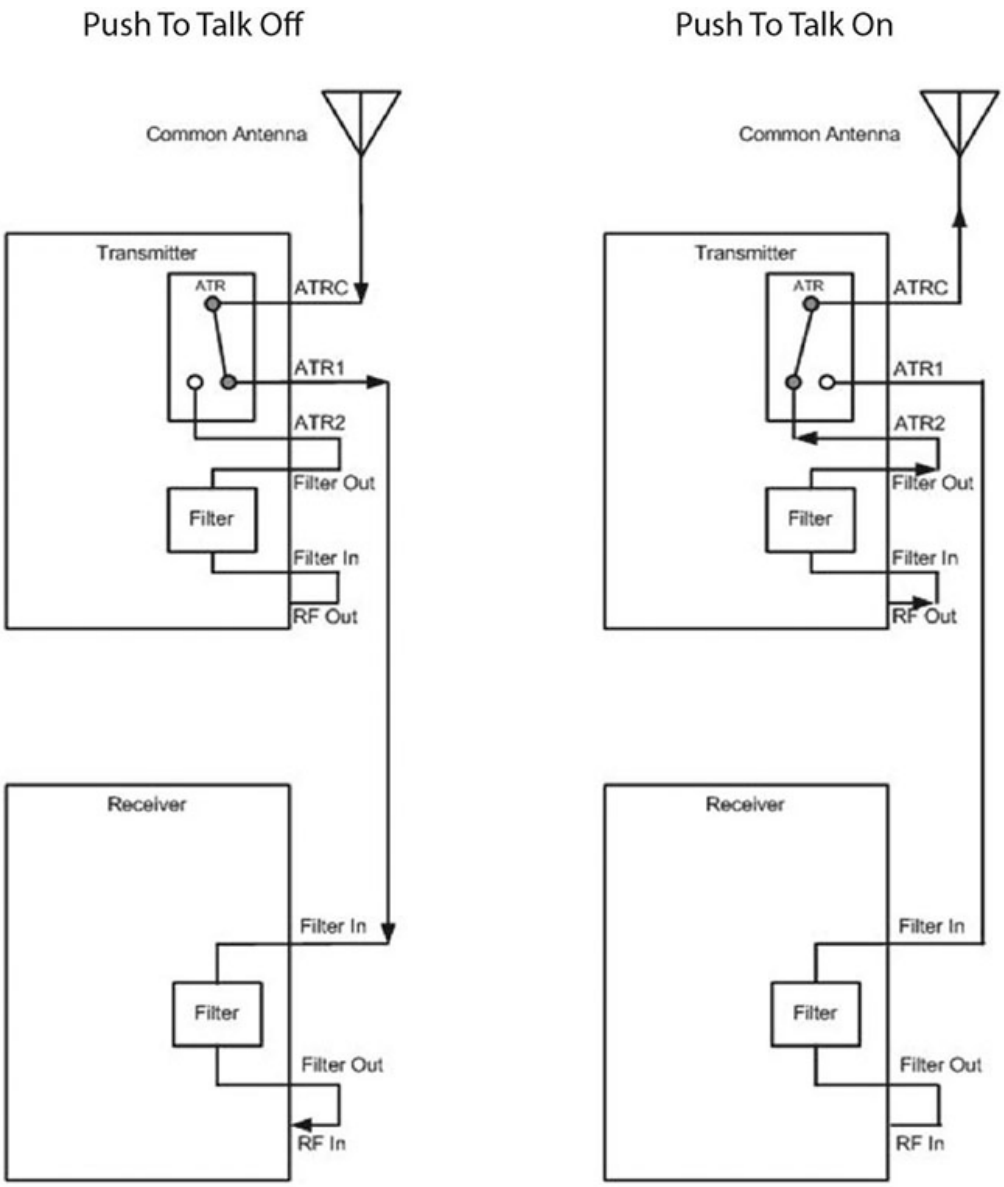

Figure 3–5. Transmit and receive through common antenna.

With PTT off, the ATR connects ATRC to ATR1, routing incoming signals from the antenna to the receiver. With PTT on, the ATR connects ATRC to ATR2, routing the transmit signal to the antenna. Figure 3–6 shows the internal cavity filters being used but they can be bypassed or an external filter may be used.

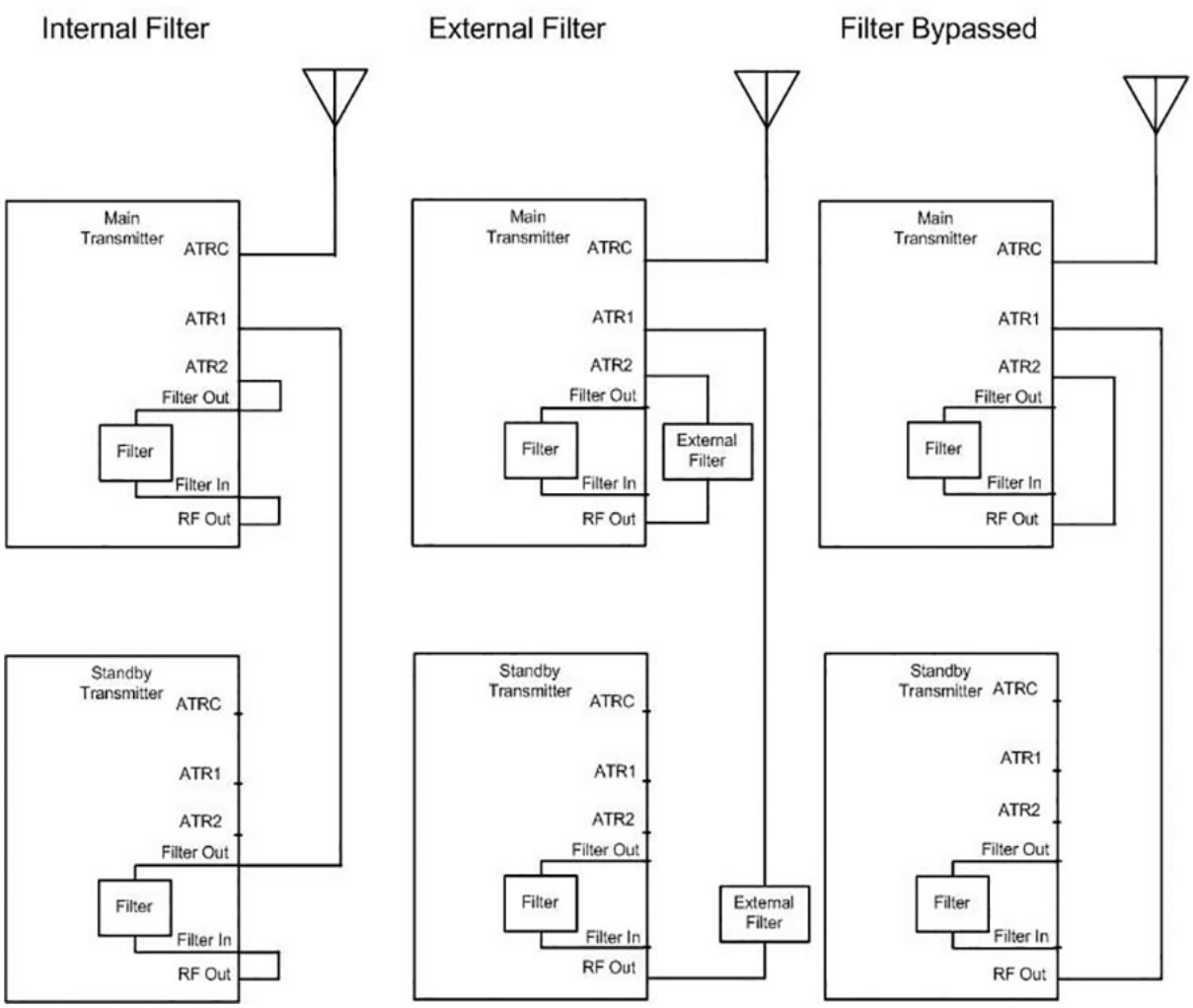

Figure 3–6. Main and standby transmitter configurations.

Now that we have covered the most important features of transmitters, receivers, and transceivers, it is time to shift towards ancillary equipment. This equipment is used to augment, monitor, regulate, and complete a communications system.

Self-Test Questions

After you complete these questions, you may check your answers at the end of the unit.

028. Transceiver fundamentals (refer to foldout 10 and 11)

1. What is the maximum tuning time for the AN/GRC–171 and AN/GRC–211?

2. Between the AN/GRC–171 and AN/GRC–211, which transceiver has a continuous transmit duty cycle?

3. What is the power output of the AN/GRC–171?

029. Very high and ultra high frequency transceivers (refer to foldout 12)

1. What is the difference between the A8 modules in the AN/GRC–171 and AN/GRC–211?

2. List the three intelligence inputs used to modulate the carrier.

3. What is the output of the PTT keyer, regardless of the input?

4. Explain the difference in timing between key 1 and key 2.

5. What component keeps the modulation percentage constant?

6. What does the low pass filter section use to prevent over modulation when using the data input?

7. If the ALC voltage decreased, what would the RF output of the predriver/ALC attenuator do?

8. What does sidetone tell an operator?

9. What is the injection frequency for UHF and VHF?

10. What is the most selective filter in the system, determining overall selectivity?

11. What action develops the BCD information that the radio uses to tune the filter to a desired frequency?

12. List the three conditions for the servo system.

030. CM–350 transceiver configuration

1. When in the transceiver configuration, what component provides the transmit and receive switching?

2. When not transmitting, where does the ATR transfer the incoming signals?

3−4. Ancillary Equipment

Sometimes considered support equipment, ancillary items help a system by providing signal propagation, remote control, security and safety, as well as many other characteristics that assist the user and maintenance personnel. Antennas, couplers, recorders, and reproducers all supplement the signals from our equipment. Without some of them, the equipment could not function as specified in the technical orders.

031. Antenna propagation and basic elements

Various types of radio waves are propagated in radio communications. In this lesson, we explore some of the basics of wave propagation. An understanding of propagation fundamentals is critical to being able to select the correct antenna. The antenna is just as important as any other item in a communications system. It must be of the right type and size if you are to obtain successful communications. Your unit's mission could depend on your knowledge of antennas and wave propagation.

You would be surprised to find out how many antennas around the world are being improperly used. Many people seem to be satisfied to just receive a signal and then blame the receiver when it does not sound great. Often the antenna is the problem; it may not be the correct antenna for their application. Sadly, the basics of wave propagation and antenna theory often are forgotten.

Wave propagation

Radio communications are accomplished by surface-wave, space-wave, or sky-wave propagation. Since you are concerned with ATC radios, this discussion is limited to space-wave propagation.

Space-wave communications are limited to line-of-sight (LOS). LOS can be from a few miles to hundreds of miles, depending on the location of the antennas. The real limit for space-wave is any obstructions that might exist. Satellites and spacecraft use space waves for millions of miles, but here on the ground, the curvature of the Earth is the biggest limitation for space-wave communications.

The space-wave is made up of two components—the ground-reflected wave and the direct wave. The direct wave travels through the atmosphere from one antenna to the other via LOS. Since the wave does not travel through the earth's surface, the conductivity of the soil is not a factor. Maximum LOS distance depends on the height of an antenna above the ground–the higher the antenna, the greater the maximum LOS distance. Because the radio signal travels in air, any obstructions (such as a mountain or heavy tree lines) between the two antennas can block or reduce the signal and prevent communications. For an antenna 3 meters above the earth, you can expect a maximum LOS distance of about 4 to 5 miles.

The ground-reflected wave, like the direct wave, travels through the atmosphere but reflects off the earth when traveling from the transmitting antenna to the receiving antenna. Together, the ground-reflected wave and the direct wave form the "space-wave."

Basic antenna concepts

An antenna is a conductor or set of conductors used to radiate electromagnetic energy into space or collect electromagnetic energy from space. The physical size, construction details, and appearance of an antenna depend primarily on what you intend to do with it. This section will look at some of the basic concepts of antenna operation.

Electromagnetic fields

To communicate by radio, energy radiates into space as electromagnetic fields. The antenna is a transducer because it converts RF energy into electric and magnetic fields of force. These fields, moving through space at approximately the speed of light, transmit to distant locations a portion of the energy originally produced by the transmitter.

The receiving antenna converts the received fields, containing the transmitted intelligence, back into RF currents. The receiving antenna accomplishes this step automatically by its very nature. When the electromagnetic fields traveling through space cut across the receiving antenna, they impress a voltage across the antenna, which causes an RF current to flow. The receiver accepts this current from the antenna and uses it to reproduce the transmitted signal.

Reciprocity

Whether you use the antenna for transmitting or receiving, the various properties of an antenna do not change. The more efficient a certain antenna is for transmitting, the more efficient it is for receiving on the same frequency. Likewise, the directivity of the antenna is the same. Reciprocity is the ability of an antenna to receive and transmit equally well.

Polarization

When dealing with antennas, you will undoubtedly hear the term polarization used at least once or twice. You know the radiation field from the antenna is composed of electric and magnetic lines of force. These lines of force are always at right angles to each other. Their intensities rise and fall together, reaching their maximums 90 degrees apart. The electric field determines the direction of polarization of the wave. The electric lines of force lie in a vertical direction when transmitted from a vertically polarized antenna. The electric lines of force lie in a horizontal direction in a horizontally polarized antenna. Circular polarization has the electric lines of force rotating through 360 degrees with every cycle of energy. Best results occur when the receiving antenna is oriented (polarized) in the same direction as the electric field from the transmitting antenna.

A simple horizontal antenna is bidirectional. This characteristic is useful when you desire to minimize interference from certain directions. Horizontal antennas are less likely to pick up other radio interference interference, which is ordinarily vertically polarized.

Simple vertical antennas are omnidirectional which makes them very useful for mobile communications such as from a vehicle. Picture a whip antenna mounted on top of a truck; this is a vertically polarized antenna. Vertical antennas are more susceptible to other interference than horizontal antennas.

Antenna gain

The term gain refers to an increase in radiating effectiveness of an antenna system over some standard. An often-used standard is the isotropic antenna. The isotropic antenna is a theoretically perfect radiator that radiates equally well in all directions. Keep in mind that an isotropic antenna does not exist, hence the term theoretical. Many antennas have the ability to focus RF energy in certain directions. They do this by redirecting the energy from other directions. An antenna with 3 decibels referenced to isotropic antenna (dBi) is an antenna that will deliver twice as much power to a receiving antenna, or receive twice as much power from a transmitter, than the theoretically perfect antenna (keep in mind that 3 dB doubles/halves power). The antenna does this by redirecting the energy from other directions. Visualize this by likening it to a light bulb radiation pattern. A bare light bulb in a socket radiates its light in all directions. If you put a reflector behind it, the light intensifies in the direction of the reflection but dims in the direction blocked by the reflector.

The thing to remember is an antenna's gain is a measure of its effectiveness. An antenna that has gain does NOT increase the amount of RF that it radiates. It merely focuses the RF that radiates so that it can be more effective.

Directivity

Directivity has the same root as direction. Therefore, you might say that directivity has something to do with direction. Quite often, you want to communicate with particular stations in fixed locations or directions. In these cases, you do not need to spray RF all over, wasting energy and increasing the chances of the wrong stations receiving your signals. On the other hand when communicating with aircraft such as from an air traffic control tower the opposite is true.

You can classify antennas according to their directional properties:

- Omnidirectional.
- Bidirectional.
- Unidirectional (ordinarily referred to as simply "directional")

An omnidirectional antenna radiates radio energy in a circular pattern. A bidirectional antenna has two main lobes, with nulls between them. A unidirectional antenna has a single large lobe in one direction and greatly reduced lobes, or nulls, in other directions. Again, since you are primarily concerned with ATC communications in this lesson, our discussion is limited to the omnidirectional antenna.

An omnidirectional antenna radiates energy equally well in all compass directions. The most common omnidirectional antenna is the whip. You may have seen these used on semis, pickup trucks, and some cars. The long wobbly citizen's band antennas are whips. You use the omnidirectional antenna when you need to communicate in several different directions at once, for example from an ATCT or an automobile. Since the omnidirectional antenna radiates equally well in all directions, it also receives from all directions. The down side is that it also allows interference from any direction to affect the received signal.

032. Common air traffic control antennas and couplers

Now that you are familiar with some terminology and basic antenna theory, we will take a brief look at some specific antennas you may come across in your career. Afterwards, we will discuss antenna couplers.

As you might imagine, the Air Force uses many different antennas. Each has its own characteristics and you will find that the more familiar you are with each antenna, the easier your job will be.

AT–197/GR antenna

The AT–197/GR antenna (fig. 3–7) is a discone antenna with a removable 12-radiator upper assembly and 12 removable lower radiators. The term "discone" describes the shape—the upper radiator forms a disc and the lower radiators are conical in shape. This shape decreases the antenna's surface area and minimizes wind resistance. The antenna weighs approximately 6 pounds and measures 19 inches in diameter and 27 inches in length when assembled.

The AT–197/GR is for broadband, omnidirectional, ground-based communications with aircraft. It is vertically polarized, which allows it to operate well at frequencies ranging from 225 to 400 MHz UHF. Its 50-Ω impedance makes it suitable for use with many Air Force transmitters, receivers, and transceivers with a maximum VSWR of 1.6:1. Its appearance is similar to an umbrella and because its mounting hardware is very versatile, you often find it mounted on the sides or roofs of buildings as well as on top of poles and towers.

AS–1181/UR antenna

The AS–1181/UR antenna (fig. 3–7) has a fiberglass radome enclosure that makes it weather tight and offers excellent protection against rough handling. The antenna weighs approximately 13 pounds and measures 8 inches in diameter and 58 inches in length.

The AS–1181/UR is for broadband, omnidirectional, ground-based communications with aircraft. It is a vertically polarized half-wave dipole and operates at frequencies ranging from 100 to 156 MHz VHF. Its 50-Ω impedance makes it suitable for use with many Air Force transmitters, receivers, and transceivers with a maximum VSWR of less than 1:2. In addition to fixed base use, due to their small size, both this antenna and the AT–197/GR is also commonly the antenna of choice in deployed environments.

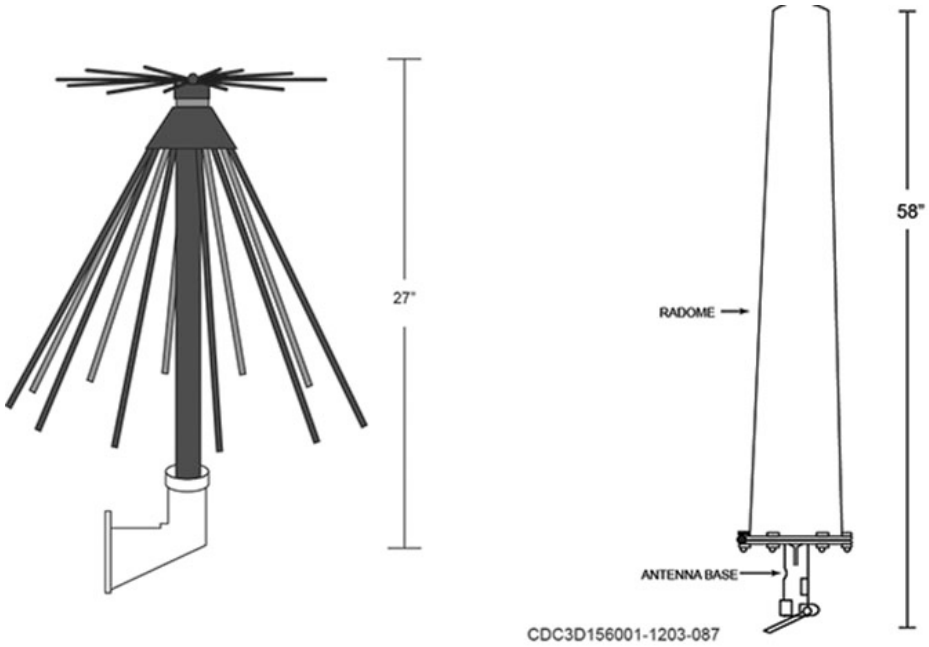

Figure 3–7. AT–197/GR and AS–1181/UR antennas.

AS–1097/GR antenna

Another common UHF antenna is the AS–1097/GR, shown in figure 3–8. This antenna consists of a four-element stacked array enclosed in a cylindrical waterproof radome. It is the largest of the antennas discussed thus far, weighing approximately 41 lbs. and measuring 7 inches in diameter and 117 inches in length.

The AS–1097/GR is vertically polarized omnidirectional antenna. It operates in the frequency range of 225 to 400 MHZ UHF. The input VSWR is less than 2:1 when terminated to a 50-Ω source. The biggest advantage of this antenna is it provides 4 dBi of gain above half-wave dipoles; however, nothing comes without a cost. This antenna is approximately four times the length of the previously discussed AT–197/GR UHF antenna.

AS–3472/G and AS–3473/G antennas

The AS–3472/G and AS–3473/G antennas (fig. 3–8) are collinear in shape and are hermetically sealed in a low-loss radome material which offers protection against harsh environmental conditions and moisture. Both are approximately 6 feet in length and weigh 70 pounds each. They are designed with symmetrically flanged bases on each end to facilitate mounting and enable stacking; you can install one on top of the other.

The AS–3472/G and AS–3473/G are vertically polarized and designed for broadband, omnidirectional air traffic control and vehicle communications. The AS–3472/G is the VHF model and has a frequency range of 115 to 156 MHz, and the UHF AS–3473/G model has a range is 225 to 400 MHz. Both antennas have a maximum VSWR of 2.5:1 when connected to a 50-Ω source and provide a typical gain of 4 dBi. When installed in the “stacked” configuration, 25 dB of isolation prevents cross-talk interference from adjacent channels.

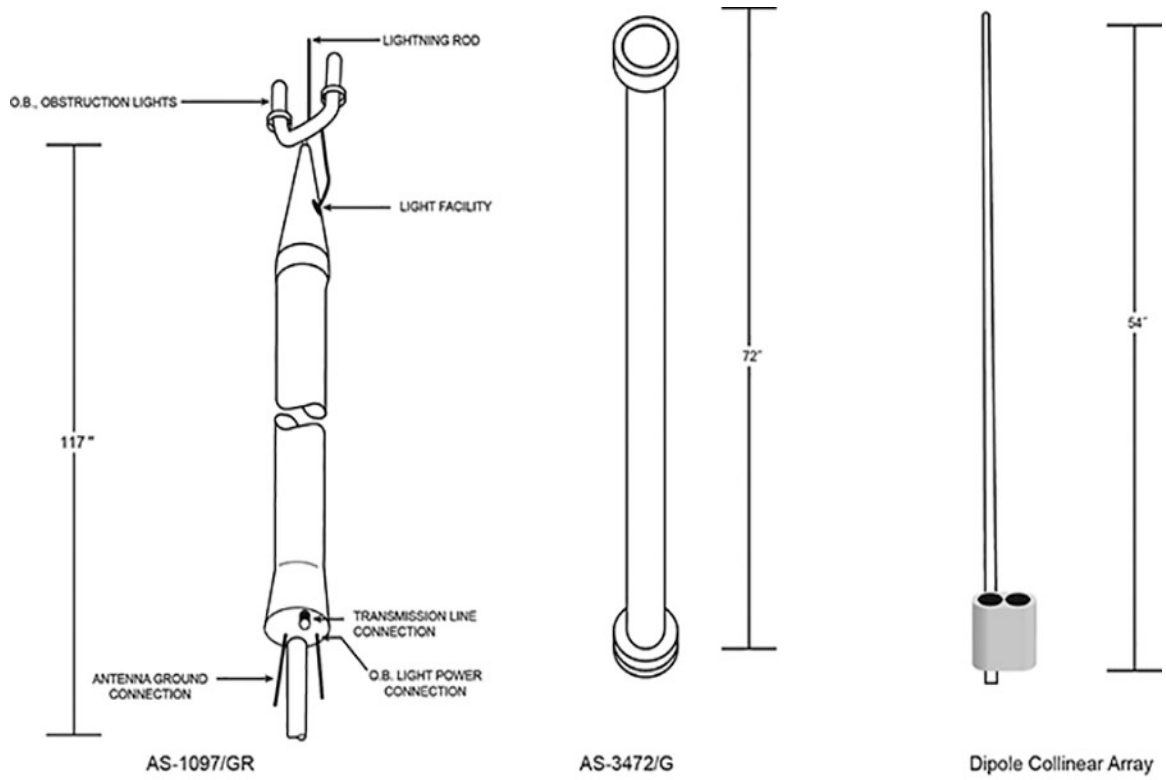

Figure 3–8. AS–1097/GR, AS–3472/G, and dipole collinear array antennas.

These antennas used to be the standard for fixed military air traffic control facilities. However, this has changed in recent years largely due to their cost, physical size, and technological improvements. Now most new air traffic control installations are choosing to use the inexpensive, lightweight dipole collinear array antennas discussed below.

Dipole collinear array

Figure 3–8 shows a typical dipole collinear array. These antennas are available in a variety of sizes and specifications from multiple manufacturers to meet the needs of nearly any facility. Models are available from single to multipole (multiple antennas built into a single unit) with up to 5 inputs for some UHF antennas. They are rugged and lightweight with typical sizes/weights ranging from 32.5 inches in length and 4 pounds for a single element UHF, to 152.5 inches and 12.5 pounds for a two-element multipole VHF.

All models are vertically polarized, broadband, omnidirectional halfwave dipole antennas. Supported frequency ranges for the common elements are 116 to 150 MHz VHF and 225 to 400 MHz UHF. The maximum VSWR for all models is 2:1 when fed with a 50-Ω source and typical gains range from 2 to 4.5 dBi. The higher gain models have a longer overall length that is typical of all antennas. All multipole antennas exhibit a minimum isolation between elements of 30 dB to prevent cross-talk interference between adjacent channels.

This is not an all-inclusive list of antennas. Refer to 31-1-141-12, *Basic Electronics Technology and Testing Practices—Antenna Principles and Measurements,* for further guidance.

Antenna coupler

Suppose a situation arises, where the only antenna available causes a VSWR that is too large for the transmitter to work; what can you do? Using an antenna coupler may solve the problem. You may see several different antenna couplers during your career, but all perform the same function: to match the equipment to the transmission line and antenna.

One particular coupler in use is the CU–547/GR. This coupler is actually a multicoupler. Multicouplers allow more than one channel (a channel being 1 transmitter and 1 receiver or one transceiver) to share one antenna. The CU–547/GR tune to support four separate UHF frequencies/channels. Tuning of this particular coupler consists of simply adjusting the cavities (via front panel knobs) within the coupler for maximum forward power output. Although it is an old piece of equipment, you will find the CU–547/GR in use at many bases supporting air traffic control communications. One big advantage of any multicoupler's use is the ability to decrease the number of antennas installed. While the CU–547/GR supports four channels, there are multicouplers in existence that allow for many more inputs/outputs from a single antenna.

033. Other associated equipment

As you can see, the airfield environment is greatly affected by ancillary equipment items. Again, while this section does not cover all possible equipment or system parts, it does give you insight on a few critical items to your career field: remote control functions, the audio recorder and reproducer, and the automatic lockout and override device (ALOD).

Remote control functions

Most equipment that you work on will have some application of remoting incorporated into the system. There are a few things you need to know regarding remoting—these include local remoting, the Regional Maintenance Center (RMC), and troubleshooting both types.

Local remote lines

Most bases will have various types of remoting equipment to maintain. These can include radios, weather equipment, and navigational aids.

Radio facilities are sited away from the flight line and control tower to minimize possible antenna obstructions for aircraft. In order for tower personnel to receive and transmit over the radio, remote cabling is needed between the tower and the radio site. This cabling is usually copper telephone lines or fiber optics. These lines are not always straight runs from the tower (or customer location) to the ground-to-air transmit and receive (GATR) site. They can run through various telephone exchanges and junction boxes throughout your base or location. Troubleshooting these lines can be difficult unless proper wiring diagrams, or cutsheets, are available as reference.

Weather equipment is sited on the flight line to ensure accurate readings for tower personnel and pilots. The weather information captured by the equipment is remoted to the weather facility, the tower, and sometimes to the maintenance work center.

Regional Maintenance Center remote lines

The RMC has remotely taken over most navigational aid maintenance for the entire career field. In order for the RMC to access these sites, remote access can sometimes be thousands of miles away. Navigational aids also have local status and control lines that run to the tower. Host base support from the RAWS maintenance work center is sometimes needed to assist in troubleshooting issues with the systems and to maintain certain features of the equipment shelters.

Troubleshooting

It is impossible to list every issue that a site may face in troubleshooting remote lines. There are a few steps that you can take to discover some of the most common problems that may arise.

Open circuits

An open circuit is the most common line issue. An open circuit is a break in continuity along the transmit or receive path. Checking the line can be accomplished by putting a tone on one end of the line and checking the other end for the same tone. If your circuit is properly documented, you can notify the telephone shop to check the circuit number for continuity. Many times open circuits are

caused by a missing bridge clip on a telephone block somewhere along the line or a line was severed during a construction dig.

Shorted circuits

Shorted circuits can happen with heavy rains and flooded copper junction boxes, crimped lines, improperly connected circuits, and many more ways. Shorts are much harder to find than an open. Sometimes you can find a shorted pair by removing both ends of the line and checking the continuity between the lines with a multimeter. The lines should read open on the meter if it detects continuity the lines are touching somewhere. You may have to inspect the entire line, if possible, to find the short. Feedback, noise, and cross-talk interference are indications that a line may be shorted.

Audio recorder and reproducer

The audio recorder provides the legal audio recording capability between air traffic controllers, pilots, and ground-based entities. These radio and telephone conversations contain critical information required to be recorded for emergency actions such as an aircraft mishap. Many moving parts are in motion on an airfield to include aircraft, grounds workers, and airfield management personnel, just to name a few. Controllers and investigators are required to review the audio to get full situational awareness and determine who was at fault during an incident.

The digital audio legal recorder (DALR) is the current system that provides the recording and audio reproduction for Air Force control towers. This system will be covered more in-depth in Volume 3.

Automatic lockout and override device

The Transmitter Control C–10639/G ALOD is a transmitter controller that consists of a single unit and is designed to accept audio and keying signals from as many as eight sources. It performs logic and switching functions on these signals and outputs them to the transmitter equipment. Normally, only four channels are used, but with the optional expansion module installed, the unit can control up to eight channels.

Three of the four inputs (lockout channels) are mutually exclusive; that is, the first input gains access to the transmitter and disables the remaining two lockout channels as long as the first input remains. The fourth channel is a priority channel, which can immediately override any of the other three channels.

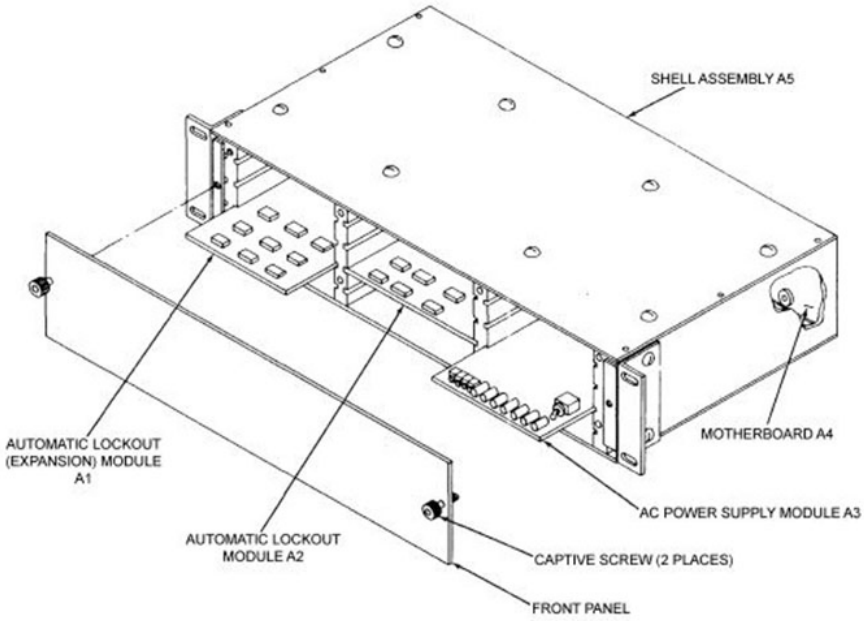

Figure 3–9. Transmitter Control C-10639/G.

When optional expansion module A1 is installed, the system expands to six lockout channels and two priority channels (fig. 3–9). The six lockout channels become mutually exclusive with each other. The two priority channels also become mutually exclusive with each other, and either priority channel can immediately override any of the lockout channels. No lockout channel may gain access when a priority channel is operating.

Self-Test Questions

After you complete these questions, you may check your answers at the end of the unit.

031. Antenna propagation and basic elements

1. What is the biggest limitation for space-wave communications?

2. Explain antenna reciprocity.

3. What type of antennas is *less* likely to pick up other interference?

4. Define antenna gain.

5. What type of antenna is best used for communicating with aircraft in all directions around a location?

032. Common air traffic control antennas and couplers

1. What versatile UHF antenna has removable radiators and is omnidirectional?

2. What type of antennas is used more often today due to their smaller size, cheaper costs, and technological advancements?

3. How many channels does the CU–547/GR support?

033. Other associated equipment

1. What organization can provide remote maintenance and system oversight for navigational aids?

2. What provides the legal audio recording capability between air traffic controllers, pilots, and ground-based entities?

3. Explain how the channels of the Transmitter Control C–10639/G ALOD work in the normal four-channel configuration.

Answers to Self-Test Questions

022

1. Frequency accuracy.
2. This change was driven by the need for better frequency stability as well as by the fact that oscillations would tend to stop in an oscillator when 100 percent modulation was used.

023

1. 116.000 and 149.975 MHz.
2. 225.000 and 399.975 MHz.
3. 50 W.
4. A8 oscillator synthesizer.
5. Quadruples the signal.
6. Doubles the signal.
7. Bypass a defective LPA or bypass the LPA in the event of AC power failure or excessive VSWR.
8. Adjust R41 to balance out the transistor bias so that the meter reads zero when there is no signal in.
9. Because the fourth harmonic is weaker than the second.
10. To protect the tunable filter during the tuning operation.
11. The A6 control radio frequency/modulator.

024

1. Adjustable from below 12 W up to 35 W.
2. Legacy analog audio and VoIP digital audio.
3. By using the front panel controls or an MDT device.

025

1. Pre-selection.
2. A part of the oscillator signal might be radiated into space.
3. 280 or 300 MHz.
4. In the IF section.
5. IF filter.
6. The mixer requires two input signals: the radio frequency and the injection frequency. A converter has its own self-contained oscillator and requires only one input signal, the radio frequency.
7. An undesired signal that, when mixed in the mixer, produces the correct IF.
8. IF amplifier.
9. The process of recovering intelligence from the modulated wave.
10. Nonlinearity.
11. They provide no power gain and selectivity is affected by loading of the tank, therefore the quality factor of the tank lowers when the diode conducts.

026

1. ±0.0005 percent after 5-minute warm-up.
2. Antenna coupler.
3. Maintains a constant audio output with a varying RF input.
4. Quadruples it up to the injection frequency.
5. IF amplifier and detector A6.
6. Preamplifier, AF/AGC-squelch A3.
7. The squelch circuit cuts off the receiver's output if the RF signal is too weak and allows the signal to reproduce when the RF signal strength meets or exceeds a predetermined level.

027

1. VHF has 25 kHz or 8.33 kHz channel spacing while UHF only has 25 kHz.
2. The operator can select the operating frequency, make adjustments, and monitor various receiver functions using the front panel controls or an MDT device.

028

1. Tuning the transceivers takes a maximum of (but usually less than) 10 seconds.
2. AN/GRC–211.
3. 20 W.

029

1. The reflectometer (A8A7) is not used in the VHF version of the A8 module.
2. Audio, mic, and the data inputs.
3. Ground.
4. Key 1 is FASR, while key 2 is SAFR. Fast attack means that key 1 goes low quickly when keyed; slow attack means that key 2 goes low after a small (milliseconds) delay. Fast release means that key 2 goes high quickly when unkeyed; slow release means that key 1 goes low after a small (milliseconds) delay.
5. Compression amplifier.
6. Clipper circuit.
7. Increase.
8. Tells the operator that the radio is modulating a carrier that goes to the antenna jack.
9. The UHF injection frequency is 30 MHz below the operating frequency and the VHF injection frequency is 30 MHz above the operating frequency.
10. Crystal filter.
11. Local frequency select thumbwheels.
12. (1) Tuning up; (2) Tuned; (3) Tuning down.

030

1. Internal ATR switch.
2. To the receiver.

031

1. Curvature of the Earth.
2. Reciprocity is the ability of an antenna to both receive and transmit equally well.
3. Horizontal antennas.
4. An increase in radiating effectiveness of an antenna system over some standard (usually an isotropic antenna).
5. Omnidirectional.

032

1. AT–197/GR.
2. Dipole collinear array antennas.
3. Four.

033

1. Regional Maintenance Center.
2. Audio recorder.
3. Three of the four inputs (lockout channels) are mutually exclusive; that is, the first input gains access to the transmitter and disables the remaining two lockout channels as long as the first input remains. The fourth channel is a priority channel, which can immediately override any of the other three channels.

Complete the unit review exercises before going to the next unit.

Unit Review Exercises

Note to Student: Consider all choices carefully, select the *best* answer to each question, and *circle* the corresponding letter. When you have completed all unit review exercises, transfer your answers to the Field-Scoring Answer Sheet.

Do not return your answer sheet to AFCDA.

44. (022) What is the process of heterodyning an intelligence (audio) signal with a radio frequency (RF) carrier to produce a new signal?
    a. Frequency modulation (FM).
    b. Amplitude modulation (AM).
    c. Frequency accuracy.
    d. Amplitude stability.

45. (023) The frequency range of the AN/GRT−22 transmitter, in megahertz (MHz), is
    a. 114.000 to 149.975.
    b. 116.000 to 149.975.
    c. 116.000 to 225.000.
    d. 225.000 to 399.975.

46. (023) In what AN/GRT−21/22 transmitter transmit mode should you connect the *antenna* to K1J3?
    a. 10-watt (W).
    b. 50-W.
    c. High power.
    d. Single sideband.

47. (023) What AN/GRT−21/22 transmitter component eliminates unwanted harmonics generated in the A10 driver?
    a. Power detector, DC1.
    b. Low pass filter, FL1.
    c. Tunable filter, FL2.
    d. Multiplier, A9.

48. (023) If the AN/GRT−21/22 transmitter power supply temperature is too high, the thermal detector in the A7 module
    a. develops voltage that enables the A2 module to create the +20 volts (V) alternating current (AC).
    b. sends a signal to the power detector, DC1, to enable keying.
    c. creates the keyed +20 V direct current (DC).
    d. develops the keyer inhibit voltage.

49. (023) What type of multiplier does the AN/GRT−21 transmitter have?
    a. Quadrupler.
    b. Doubler.
    c. Tripler.
    d. None.

50. (023) What should you do if an AN/GRT−21/22 transmitter's voltage standing wave ratio (VSWR) exceeds 3:1?
    a. Disable the earth leakage (E/L) relay.
    b. Bypass the linear power amplifier (LPA).
    c. Adjust the LPA forward power level to –5 volts (V) direct current (DC) on the front meter.
    d. Adjust the LPA forward power level to +5 V DC on the front meter.

51. (024) What is the difference in channel spacing between the very high frequency (VHF) CM–300/350 and the ultra high frequency (UHF) CM–300 transmitters?
    a. VHF has a channel spacing of 3.88 or 25 kilohertz (kHz) and the UHF channel spacing is 3.88 kHz only.
    b. VHF has a channel spacing of 8.33 or 25 kHz and the UHF channel spacing is 8.33 kHz only.
    c. VHF has a channel spacing of 3.88 or 25 kHz and the UHF channel spacing is 25 kHz only.
    d. VHF has a channel spacing of 8.33 or 25 kHz and the UHF channel spacing is 25 kHz only.

52. (024) The radio frequency (RF) power output of the CM–350 transmitter is
    a. 120 volts (V) alternating current (AC).
    b. 12 to 35 watts (W).
    c. 2 to 35 W.
    d. 2 to 12 W.

53. (025) What term describes the process of tuned circuits selecting a band of receiver frequencies around a desired signal?
    a. Frequency conversion.
    b. Superheterodyne.
    c. Pre-selection.
    d. Clamping.

54. (025) Which receiver component determines the overall selectivity?
    a. Intermediate frequency (IF) filter.
    b. Radio frequency (RF) amplifier.
    c. Image frequency filter.
    d. IF amplifier.

55. (025) The image frequency is a(n)
    a. desired signal that, when mixed in the mixer, produces the correct intermediate frequency (IF).
    b. undesired signal that, when mixed in the mixer, produces the incorrect IF.
    c. undesired signal that, when mixed in the mixer, produces the correct IF.
    d. desired signal that, when mixed in the mixer, produces the incorrect IF.

56. (025) Diode detectors give
    a. high-fidelity detection for signals of insufficient amplitude.
    b. low-fidelity detection for signals of insufficient amplitude.
    c. high-fidelity detection for signals of sufficient amplitude.
    d. low-fidelity detection for signals of sufficient amplitude.

57. (026) The automatic gain control (AGC) voltage maintains a constant audio output with a
    a. constant audio frequency (AF) input.
    b. constant radio frequency (RF) input.
    c. varying AF input.
    d. varying RF input.

58. (026) Which circuit cuts off a receiver's audio output if the radio frequency (RF) signal is too weak and allows the signal to reproduce when the RF signal strength meets or exceeds a predetermined level?
    a. Mixer.
    b. Squelch.
    c. Degenerative feedback.
    d. Automatic gain control (AGC).

59. (027) CM–300 series receivers support legacy analog audio and
    a. Voice over Internet Protocol (VoIP).
    b. video teleconferencing.
    c. fiber optic (FO) connections.
    d. external triggering.

60. (027) Both CM–300 series receivers can operate on
    a. 24 volts (V) alternating current (AC) or 120 V direct current (DC).
    b. 120 or 240 V AC or 24 V DC.
    c. 120 V AC or 24 V DC.
    d. 120 or 240 V AC.

61. (028) How many seconds *maximum* does it take the AN/GRC–171/211 transceiver to tune?
    a. 5.
    b. 7.
    c. 10.
    d. 15.

62. (028) What is the transmit duty cycle for the AN/GRC–171 transceiver?
    a. 1 minute transmit, 9 minutes receive.
    b. 3 minutes transmit, 7 minutes receive.
    c. 7 minutes transmit, 3 minutes receive.
    d. 9 minutes transmit, 1 minute receive.

63. (029) No matter the input keying voltage to the AN/GRC–171/211 transceiver, the output is *always*
    a. 6 volts direct current (VDC).
    b. 26 volts (V) direct current (DC).
    c. 48 VDC.
    d. a ground.

64. (029) In the audio section of the AN/GRC–171/211 transceiver, what component keeps the modulation percentage constant?
    a. Low pass (LP) filter.
    b. High pass (HP) filter.
    c. Compression amplifier.
    d. Radio frequency (RF) preamplifier.

65. (029) What happens to the audio in the AN/GRC–171/211 transceiver when the squelch sample is greater than the front panel squelch reference?
    a. Audio is heard at the speaker.
    b. It becomes distorted.
    c. There is no audio.
    d. It is band limited.

66. (030) When a CM–300 series transmitter and receiver are connected to a common antenna, and the antenna transfer relay (ATR) switch position is set to ATR0, the transmit and receive switching is handled by
    a. an internal ATR switch in the transmitter.
    b. an internal ATR switch in the receiver.
    c. external cavity filters.
    d. internal cavity filters.

67. (030) What needs to happen in the CM–350 transceiver configuration antenna transfer relay (ATR) switch in order to transmit?
    a. The transmitter keys, then the ATR routes the transmit signal to the antenna.
    b. The ATR routes the transmit signal to the antenna, then the transmitter keys.
    c. The transmitter keys, then the ATR routes the receive signal to the antenna.
    d. The ATR routes the receive signal to the antenna, then the transmitter keys.

68. (031) The biggest limitation to space-wave communications is
    a. electromagnetic fields.
    b. curvature of the Earth.
    c. slow signal travel.
    d. radiation.

69. (031) A theoretically perfect radiator (antenna) that radiates equally well in all directions is
    a. horizontally polarized.
    b. omnidirectional.
    c. bidirectional.
    d. isotropic.

70. (031) What type of antenna receives well in all directions but also allows interference from all directions?
    a. Bidirectional.
    b. Unidirectional.
    c. Omnidirectional.
    d. Vertically polarized.

71. (032) How many channels does the CU–547/GR antenna coupler support?
    a. 2.
    b. 4.
    c. 6.
    d. 8.

72. (033) What type of line fault can be found by putting a tone on one end and checking for continuity at the distant end?
    a. Open circuit.
    b. Short circuit.
    c. Fiber optic (FO) fault.
    d. Status and control fault.

Please read the unit menu for unit 4 and continue ➔

Student Notes

Unit 4. Test Equipment and Airfield Operations Support

4–1. Test Equipment 4–1
034. Multimeters 4–1
035. Oscilloscope basics 4–5
036. Radio and audio frequency signal generators 4–12
037. Measuring power 4–15
038. Measuring line levels, signals, and distortion 4–25
039. Measuring frequency 4–33
4–2. Analyzing Systems 4–39
040. Analyzing ground navigational equipment 4–39
041. System analyzers 4–48
042. Other support equipment 4–51
4–3. Airfield Operations Support 4–56
043. Importance of Radar, Airfield & Weather Systems in the aerodrome 4–56
044. Equipment siting criteria 4–58
045. Electrical power systems 4–66

IN ORDER TO SUPPORT the mission, you will need to understand how to operate test equipment and analyze the equipment that you maintain. These items help you read certain parameters as well as adjust equipment and systems to its optimal settings. Some test equipment may be specified only for a certain parameter or designated to analyze one designated system. This unit will cover some of the test equipment, system analyzers, and airfield operations procedures necessary for you to provide top-notch support to the airfield and surrounding agencies.

4–1. Test Equipment

Where you are stationed and what systems you maintain, determines what test equipment you will work with. There are many different types of test equipment but they all can be categorized into certain types by what function they perform. This section will cover general aspects of test equipment but they will apply to most items that you will have at your base. Having a firm grasp on the concept of how this equipment works will help you immensely in preventive maintenance and troubleshooting. Most of the time, setting up the test equipment correctly will be more difficult than actually performing maintenance. We will cover multimeters, oscilloscopes, radio and audio frequency signal generators, and equipment that measure power, line signals, and frequency.

034. Multimeters

A multimeter is an electronic measuring instrument that you will use throughout your Air Force career. The multimeter combines several measurement functions including the ability to measure voltage, current, and resistance. As a technician, you will use the multimeter to troubleshoot communication systems, isolate cable faults, and maintain radios. Though analog multimeters are still preferred for some applications, digital instruments are now used for most purposes. This lesson covers digital multimeter functions and operation using the operating characteristics of the Fluke 8025A. Keep in mind that methods for measuring voltage, current, and resistance are the same for both digital and analog multimeters.

The Fluke 8025A is a rugged, water- and chemical-resistant multimeter that is suitable for use in harsh industrial and military environments. Its capabilities include continuity, resistance, current, voltage, diode, and temperature checks. It combines the performance of a digital meter and higher input impedance with the speed and dynamic measurement capability of an analog meter.

Physical features

The Fluke 8025A digital multimeter's controls and jacks are located on the front panel beneath the display. The rotary switch selects the various measurement functions. The RANGE and HOLD push buttons (located above the rotary switch) are used to select the manual range mode and the touch-hold mode. The jacks located below the rotary switch provide input connections for the various types of measurements (fig. 4–1).

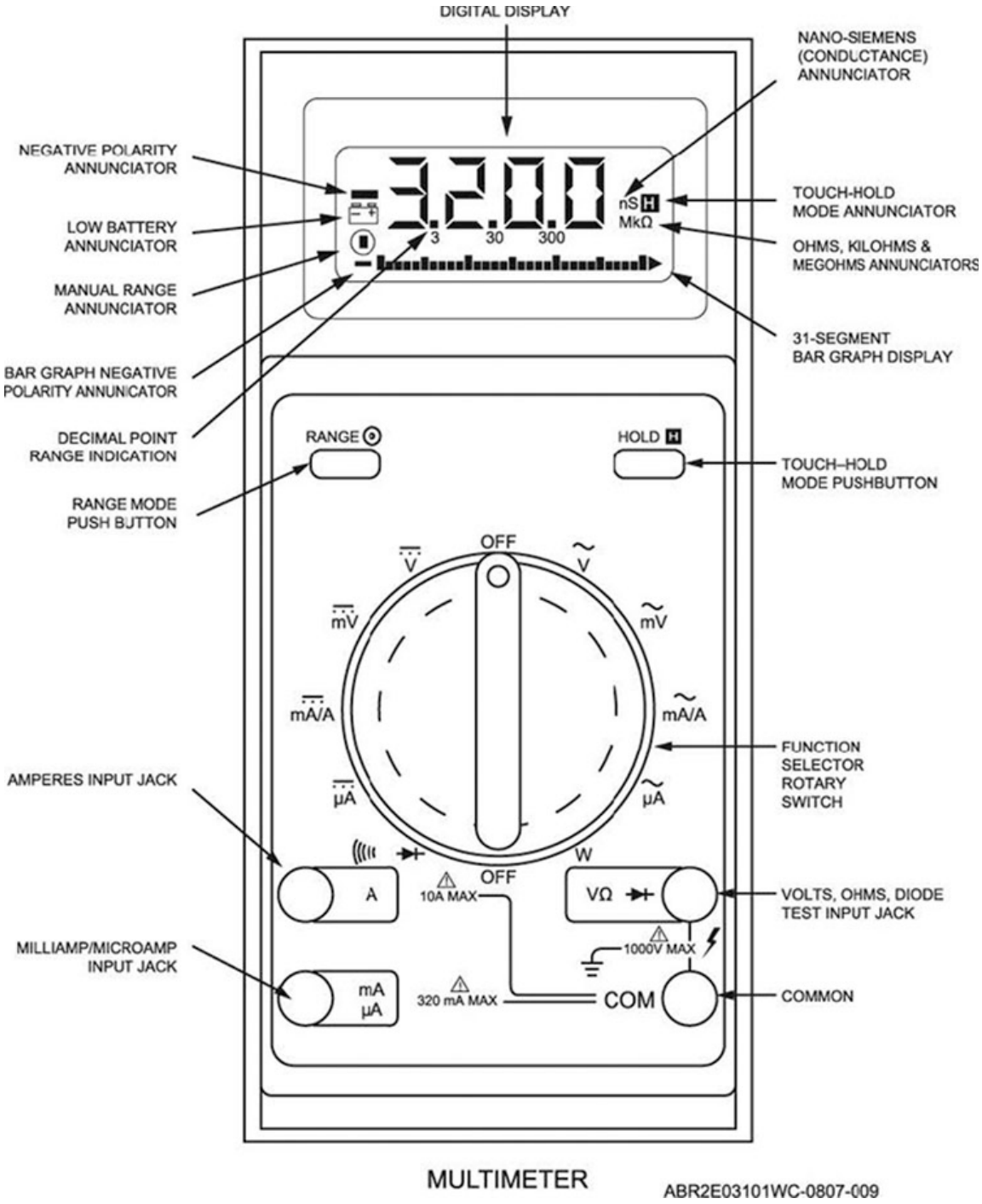

Figure 4–1. Multimeter.

Display

The display section presents four types of meter information as described in the following table.

Fluke 8025A Display Section Information	
Type	**Description**
Digital display	This display shows input data with automatic decimal point positioning.
Visual annunciators	This portion of the display shows information about which meter's functions are in use, as well as showing the condition of the battery. Examples include resistance, touch-hold mode, manual range activation, and low-battery indicators.
Analog bar graph	The analog bar graph is located just below the digital display. It shows a 31-segment bar graph, which indicates the absolute value of the input.
Range indicator	The range indicators are located between the analog bar graph and the digital display. The number displayed indicates the range in use for each of the decimal point positions. No decimal point is displayed in the 1,000 V or 3,200 µA range.

Range push button

The range button, located above the rotary switch, lets you select the measurement range manually. Push it once to enter the manual range mode, press again to increment the range, and hold it depressed for 2 seconds to return to the auto range. In auto range, the meter automatically selects the correct range for the reading taken.

Touch-hold push button

The touch-hold mode lets you watch the probes and the circuit during critical measurements. The touch-hold mode locks the measurement into the display for viewing and automatically updates the display when you take a new measurement. Press this button momentarily to select the touch-hold mode, press it again to manually update the indication, and hold it depressed for 2 seconds to exit the touch-hold mode.

Input jacks

There are four input jacks—amperes, milliamps/microamps, volts/ohms/diode, and common below the rotary switch. They serve as lead connections for the various types of measurements.

Audible indicator

The audible indicator is a beeper that produces beeps, clicks, or a continuous tone giving an audible indication when you operate a push button in the diode-test mode. It also provides an audible indication when a new reading is displayed in the touch-hold mode.

Power-up self-test

When you move the function selector rotary switch to any position from the OFF position, the 8025A performs a power-up self-test. All liquid crystal display segments are switched on during the test (about 1 second) before the unit begins normal operation. In addition to the power-up self-test, a battery test cycle is performed at power-up and each time the operator selects a different function with the rotary switch. If battery voltage is low, a low-battery symbol (annunciator) appears on the display.

Using the multimeter

As you can see, multimeters are very useful and reasonably simple to operate. In most cases, you set the function, connect the meter leads to the unit under test, and then look at the digital display for the

indication. In the following paragraphs, we will cover how the Fluke 8025A functions for different measurements.

Direct current voltage measurements

Two ranges are available for measuring direct current (DC) voltages: volts DC (VDC) and millivolts (mV) DC.

DC Voltage Measurements	
Type	**Description**
VDC	You can measure input voltages between −1,000 and +1,000 VDC by using the volts DC function.
mV DC	In the mV DC function, you can measure voltages between −320 and +320 mV DC.

Direct current measurements

There are two selections for current measurements: milliamps/amps (mA/A) DC and microamps (µA) DC.

DC Current Measurements	
Type	**Description**
mA/A DC	You use two different input jacks in conjunction with the mA/A position of the function selector rotary switch. The input jack in use determines whether the 8025A is measuring mA or A. • If the mA jack is in use with the function switch in the mA/A position, measurements between −320 and +320 mA are possible. • If the ampere jack is in use, intermittent display values up to 20A are possible. The meter's input circuitry is limited to a maximum current input of 10A continuous.
µA DC	Turning the function selector rotary switch to the µA position selects the µA DC function. You then can measure input current between −3,200 and +3,200 µA by using the mA/µA input jack.

Measuring alternating current volts

You can measure two ranges of alternating current (AC) voltages with the 8025A: V and mV.

Measuring AC Volts	
Type	**Description**
Volts AC (VAC)	Measurements between 0 and 1,000 VAC are taken with the function selector in this position. The red probe must be in the volts/ohm/diode input jack. The minus sign is disabled in this mode and the decimal point/range indicators in the display indicate the range in use.
mV AC	Only one range is available with the 8025A in this function: 0 to 320.0 mV. The minus sign is disabled in this function also.

Measuring alternating current

Just as when you measure DC current, there are two functions for measuring AC current: mA/A AC and µA AC.

Measuring AC Current	
Type	**Description**
mA/A AC	You can use two different input jacks in conjunction with this position of the function selector rotary switch. The input jack in use determines whether the 8025A is measuring mA or A. • With the mA jack in use, measurements between 0 and 320.0 mA are possible. • If you use the ampere jack, intermittent values of 20 A are possible. Like DC current measurements, the meter's circuitry is limited to a maximum current input of 10 A continuous.
µA AC	You can make measurements up to 3,200 µA in this function by using the mA/µA input jack.

Measuring resistance

Turning the function selector rotary switch to the Ω DC position selects the resistance function. The Ω annunciator is displayed when the 8025A enters the resistance function and either the k or M annunciator is displayed as appropriate for the range in use.

Testing diodes

Turn the function selector rotary switch to the diode test position to measure diodes or continuity. When testing a diode, placing the leads across a "good" diode produces an "OL" (over load or open) on the display in one direction while reversing the leads produces a continuous audible tone indicating a short.

035. Oscilloscope basics

The oscilloscope is one of the most versatile troubleshooting instruments you have on the workbench. You can use the oscilloscope to measure voltage levels (from DC to microwave), phase differences, signal presence (or absence), logic highs and lows, frequency response, distortion, and perform complex waveform analysis, to name a few. To help you measure, most manufacturers try to group similar controls together and separate different groups by color or lines on the front panel (fig. 4–2, view A). In this lesson, we will cover oscilloscope basics, and the basic facts and terms related to oscilloscope use.

The oscilloscope presents a voltage (amplitude) versus (vs) time display of the waveform on a cathode ray tube (CRT) display. It shows you an actual graphing of the signal's amplitude as it relates to time (amplitude vs time). With this display, you can tell its wave shape, its frequency, and its amplitude and whether the signal is relatively pure. An electron beam inside the CRT draws the waveform on a phosphor-coated screen. For instance, a 1 kHz signal's cycle takes 1 millisecond (ms) to alternate from the starting reference, swing to its maximum positive value, swing to its maximum negative value, and then return to its starting reference value. On the screen of the oscilloscope, you will see the trace start at some reference value, go up as it moves to the right until it reaches its maximum positive value, swing down through the reference value to its maximum negative value, and finally return to the reference value. This screen can represent the following three types of information.

- Voltage information on the vertical, or Y, axis (up-down).
- Time information on the horizontal, or X, axis (left-right).
- Depth information on the Z axis represented by variations in intensity (in-out).

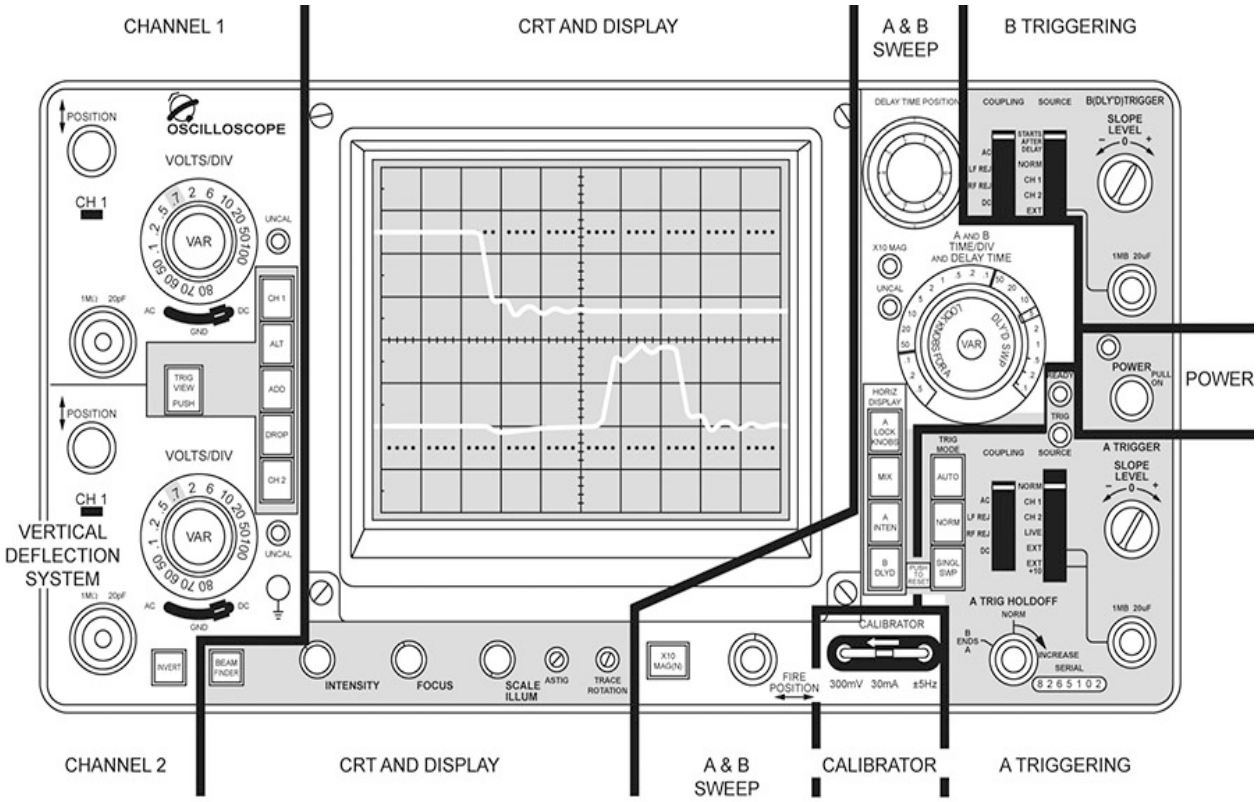

A. FRONT PANEL

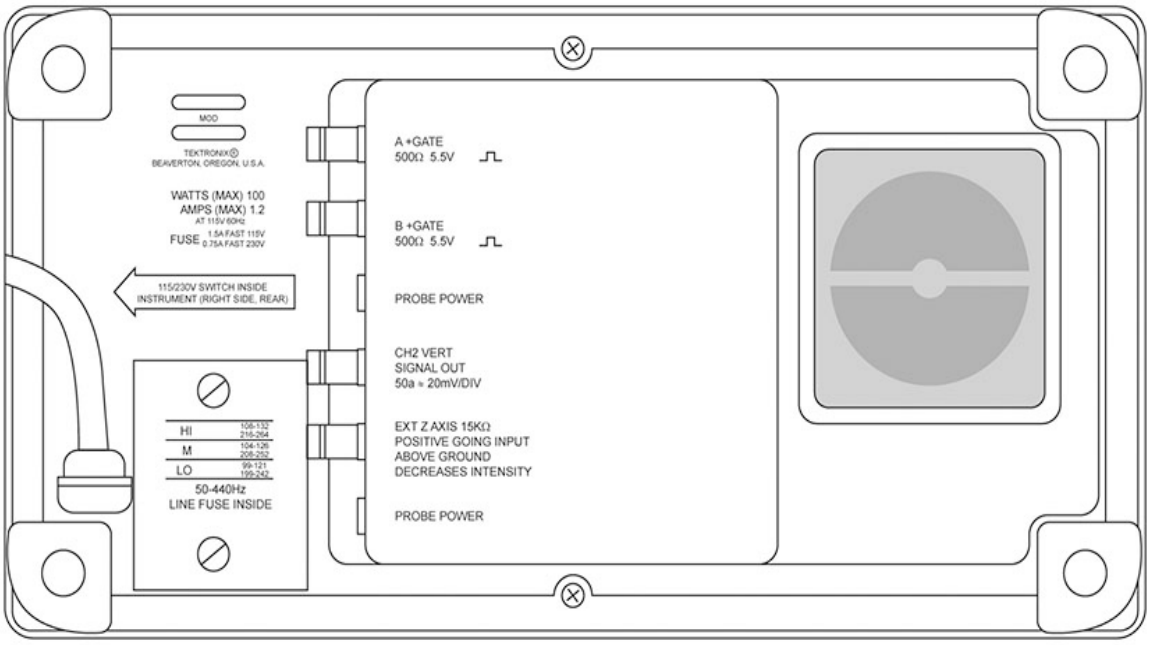

B. REAR PANEL

CDC3D156001-0911-050

Figure 4–2. Oscilloscope front and rear panels.

All oscilloscopes have the X and Y axes; the Z axis is available in some models. We will not get as deeply into the Z axis as we do the X and Y axes. All oscilloscopes have controls to adjust the voltage, time, and intensity information in order to present a meaningful picture of the signal on the CRT. Figure 4–3 shows a block diagram of the basic circuits that these controls operate.

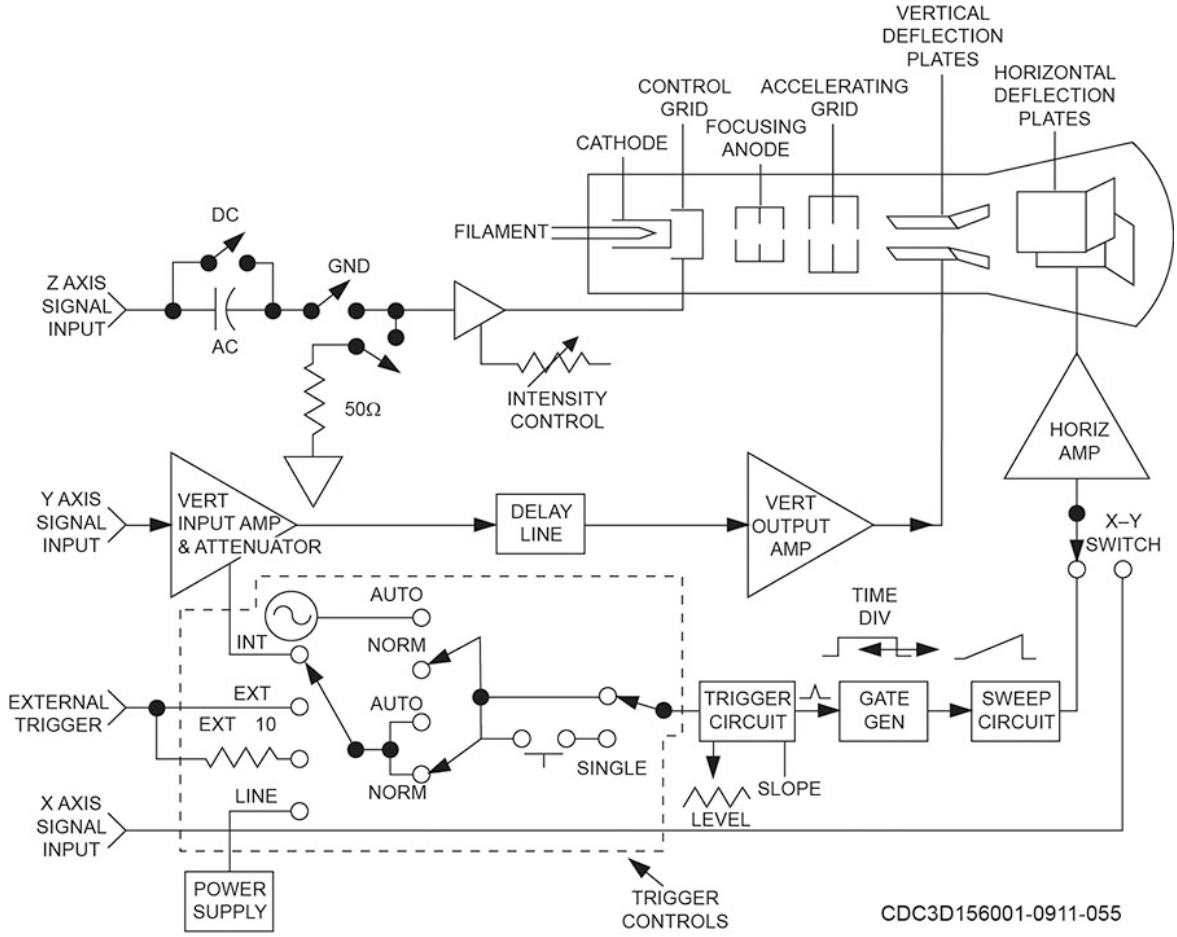

Figure 4–3. Oscilloscope block diagram.

The vertical (amplitude) axis

As shown in figure 4–3, the input signal to be measured (Y axis, vertical input) is connected to the vertical input amplifier. The vertical amplifier either attenuates or amplifies the signal for convenient viewing. The vertical input amplifier and attenuator also produce a “trigger” that is applied to the horizontal circuits. This trigger may or may not be used, depending on the switch settings you are using.

Next the incoming signal encounters the delay line. The delay line allows the sweep generator circuitry time to start a sweep before the signal reaches the CRT’s vertical deflection plates. This coordination of vertical and horizontal timing by the delay line enables viewing of the leading edge of the signal.

The vertical output amplifier provides the additional amplification that is required by the CRT’s vertical deflection plates. If the input signal is positive or positive-going, the electron beam is deflected up; if the input signal is negative or negative-going, the electron beam is deflected down. If the input signal is an AC signal, the electron beam is alternately deflected up and down.

The horizontal (time) axis

The horizontal circuits cause the electron beam to be drawn across the screen from left to right (the trace is blanked on the return, right to left). This produces a trace on the screen. The horizontal circuits determine when and how fast the trace is drawn. The triggering circuits determine the "when."

Triggering

Triggering determines whether (or not) there is a display. If the horizontal circuits are triggered, they produce a sweep voltage that causes the electron beam to be drawn from left to right on the screen. The trigger controls determine which mode of triggering is used: auto or norm.

With norm selected, the trace is blanked until a signal of sufficient strength is received. This is confusing for the beginning technician because no display or trace is seen on the screen. Once mastered, this can be the most versatile setting. In the auto setting, the trace is generated whether (or not) there is a signal. The trigger also controls the source of the triggering signal—internal, external, or line.

In the internal mode, the circuits are triggered from an internally generated trigger that is developed from the signal under test. In this position, the signal and the trace are synchronized. In the external mode, the trace can be linked to some related or unrelated event. In the line mode, the sweep is triggered by a sample of the line voltage. This is useful for troubleshooting problems related to the power supply or power line "hum."

Sweep speed

The time per division (TIM/DIV) control affects the sweep voltage's wave shape. This controls how fast the trace is drawn across the screen. If you adjust this control to a setting close to 1 sec/div, you can actually see the dot moving across the screen. As you decrease the time per division to the millisecond range, the dot moves so fast that it appears as a continuous line.

Intensity

The display's intensity is controlled by varying the bias of the CRT grid, which controls the density of the electron beam. As the voltage applied to the grid goes less negative, more electrons strike the screen, resulting in a brighter trace or display. As the voltage applied to the grid goes more negative, fewer electrons strike the screen, resulting in a dimmer trace or display. If the negative bias is large enough, the CRT is cut off—eliminating the trace. Intensity is determined by the intensity control on the front panel.

Vertical controls

The vertical input controls generally consist of an input coupling switch, calibrated attenuator, and position control. A dual trace scope also has switches to select single channel, dual channel, or various combinations.

The input coupling switch

Input coupling switches usually have at least three positions: AC, ground (GND), and DC. The AC and DC positions have high impedance, typically 1 megaohm (MΩ) shunted by about 20 picofarad (pF). A standard 10 to 1 divider probe increases the input impedance to 10 MΩ. Some oscilloscopes include a 50 Ω input impedance input coupling option. The 50 Ω input coupling option is ideal for monitoring pulse and signal generators or other low-impedance sources.

Input Coupling Switch Positions	
Position	**Description**
AC position	The AC position couples the input signal through a DC blocking capacitor, allowing only the AC component to be viewed. AC coupling can be very useful when you want to measure a small AC signal superimposed on a large DC voltage. For example, to measure the small AC ripple voltage from a power supply, you select AC coupling. The blocking capacitor blocks the large DC component and passes the AC ripple. Do not use the AC position to measure low-frequency digital-type signals. The internal DC blocking capacitor distorts the waveform as shown in figure 4–4.
GND position	The GND position is useful when you want to set a GND or zero-volts reference level on the CRT screen without disturbing the input signal connection. The input signal is internally disconnected and the vertical amplifier's input is grounded. This means that you can leave the input signal connected to your scope. You will not short it out when you switch to the GND position.
DC position	The DC position allows you to view both AC and DC components of the input signal. For example, if you have set the zero-volts reference level at the center of the screen (using the GND position) and then switch to DC, the waveform appears, showing the AC component, if any; and the signal is offset either up or down, depending on whether the DC component is positive or negative. DC coupling is also used when you are measuring digital-type signals or square waves.

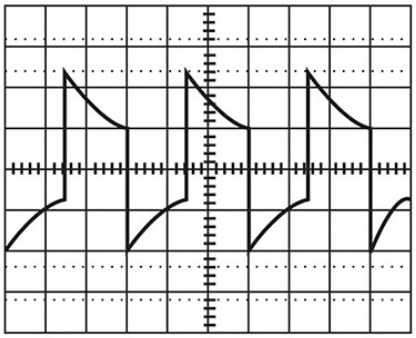

Distorted display as a result of trying to measure a low-frequency digital signal thru the input dc blocking capacitor (input switch in the AC position).

CDC3D156001-0911-053

Figure 4–4. Distorted waveform.

Volts per division

Most modern scopes use a combination of variable attenuation and adjustable vertical amplifier gain to control input signal levels. High-level signals require more attenuation and less gain so that the trace is not deflected off the screen. Low-level signals need less attenuation and more gain so the display is large enough to interpret. The setting of the volts per division (VOLTS/DIV) control indicates the volts that each vertical division represents. For instance, the display has a signal that is 4 divisions tall. If the VOLTS/DIV control is set at 5 mV per division, the measured signal would be 20 mV. If the VOLTS/DIV control is set at 5 V per division, the measured signal would be 20 V. The vernier portion of the input attenuator provides continuous sensitivity control between the calibrated volts per division ranges. Whenever you move the vernier out of its détente position, the uncalibrated (UNCAL) light is on, letting you know that the steps marked on the VOLTS/DIV dial are not calibrated.

Horizontal controls

The sweep generator, sometimes called the time base generator, produces the sawtooth waveform that controls the rate the beam is drawn horizontally across the face of the CRT. The generator's most important function is to ensure linear beam movement, meaning the beam moves at the same rate from start to finish. Without this precise rate, accurate time measurements are not possible. Another component of accuracy is the delay time. Its purpose is to delay the vertical input signal just enough so that the trace being displayed is the signal that started the sweep (fig. 4–5).

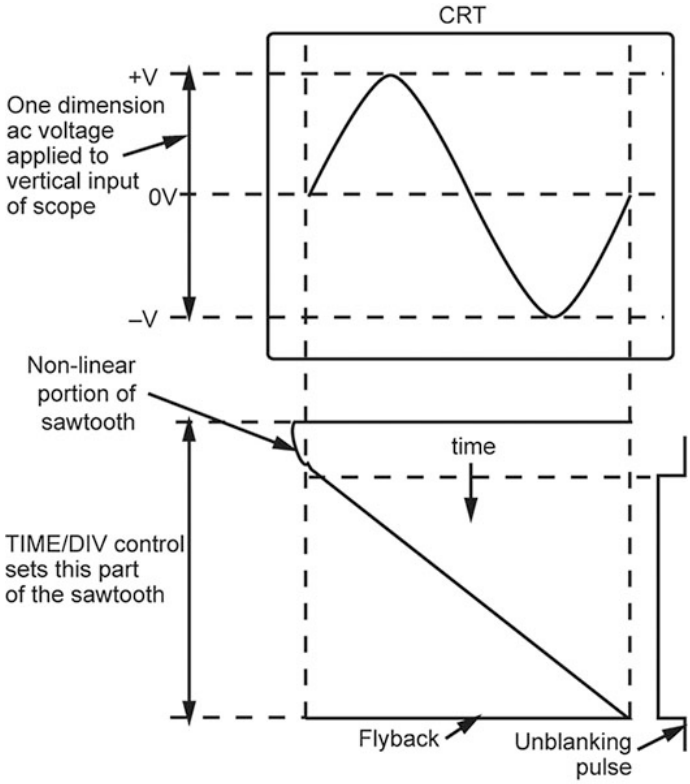

Note that there is a non-linear part to the saw-tooth sweep. Also, at the end of deflection, the sweep tends to drive the horizontal power amplifier into saturation. The unblanking pulse is timed to eliminate both of these non-linear portions of the sawtooth to provide the best time interval measurement accuracy.

CDC3D156001-0911-056

Figure 4–5. Sawtooth sweep.

The sweep generator's sawtooth waveform is controlled by the TIME/DIV control on the front panel. This calibrated control lets you select many different sweep speeds in order to view waveforms that vary from a few hertz (Hz) up to the scope's bandwidth limit. The control divides into steps covering the ranges of seconds, milliseconds, microseconds, and nanoseconds. These ranges correlate to how fast the beam is drawn across the CRT. The faster the beam is drawn across the CRT, the faster the time reference is (i.e., the shorter the scale).

For example, if the TIME/DIV control is set for 0.5 seconds per division, the time reference over all 10 major divisions (vertical graticule on the CRT face) is 5 seconds. If it is set at 5 ms per division, the full-scale time reference is 50 ms. Figure 4–5 shows how the sawtooth waveform produced by the sweep circuit develops a sine wave pattern on the CRT.

Part of the TIME/DIV control is a sweep vernier control that provides for continuous adjustment of the sweep speed between the fixed TIME/DIV steps. Whenever you move the vernier out of its détente calibrated (CAL) position, the UNCAL light illuminates, letting you know that the steps marked on the TIME/DIV dial are not calibrated.

Signal storage

A digital storage oscilloscope is a common piece of test equipment found in electronics work centers. This scope offers features not easily attained with an analog scope. A couple of these capabilities include the ability to digitize analog input signals, and to store them indefinitely on a variety of electronic media.

A digital storage oscilloscope performs quite a few functions that are similar to its analog counterpart. The biggest difference is that a digital storage oscilloscope digitizes the input signal. This allows you to collect digitized data of an entire waveform for storage or display.

Basic oscilloscope probe considerations

An oscilloscope probe is used to connect the oscilloscope to the circuit under test. Why use a probe at all? You cannot use simple test leads because they would pick up extraneous noise and signals. Probes are shielded so that all that is applied into the oscilloscope is the signal that is at the probe tip. Probes also help to prevent circuit loading and are basically an isolation device for the oscilloscope input. They allow only the desired signal in.

If the scope is being used for signal tracing or circuit analysis, some type of an isolating device must be used to prevent the scope from loading the circuit and attenuating the signal. Any voltage probe loads the circuit you attempt to measure. Choosing the correct probe minimizes this loading. To keep resistive loading errors below one percent, select a probe/scope combination that has an input resistance (Rin) at least 100 times greater than the source impedance.

Type of probes

The voltage and frequency of the signal you are measuring, along with the source impedance at the point of measurement, determine which probe to use. The most common types of probes available for circuit analysis today are: passive probe, 1:1, passive divider, 10:1 or 100:1, active (field effect transistor), and current probes. The following table describes them in more detail.

Circuit Analysis Probe Types	
Probe	**Description**
Passive 1:1	The 1:1 probe is the simplest of all probes. Your oscilloscope may have come with a 1:1 probe (and a 10:1). It is essentially a shielded piece of wire. It is often the best choice for measurements at low frequencies with low- to medium-impedance circuits. Since the typical oscilloscope has an input impedance of 1 MΩ shunted by 20 pF of capacitance, circuit impedances less than 10 kΩ can be safely measured with a simple passive 1:1 probe. Since the 1:1 probe has no multiplication factor, it allows you to use the maximum sensitivity of the oscilloscope. A scope with 2 mV/div maximum sensitivity can use 2 mV/div, whereas a 10:1 probe would be able to use only a 20 mV/div.

Circuit Analysis Probe Types	
Probe	**Description**
Passive 10:1 and 100:1 divider	Your oscilloscope probably came with a 10:1 probe as standard equipment (and maybe a 1:1). A 10:1 divider probe increases input impedance to 10 MΩ. The 10:1 probe obviously causes less loading than a 1:1. Another value of the divider probe is that it attenuates noise coming in. The divider probe also allows higher voltages to be measured. If your scope's highest range is 5 V per division, the highest voltage you can measure with it would be 40 V (there are 8 divisions on most scopes—8 × 5 = 40). With a 10:1 probe on the same scope, you may be able to measure up to 400V (8 × 50 = 400). Check the technical order (TO) for maximum measurement levels.
Active	Active probes amplify or in some other way process the signal before it is applied to the oscilloscope. Many active probes use a field effect transistor amplifier circuit and, therefore, require a bias voltage for the amplifier circuit. The field effect transistor probe has very low input capacitance, which allows it to be used at very high frequencies. Many field effect transistor amplifier probes are good to frequencies greater than 500 MHz. Most field effect transistor probes are 1:1 type probes.
Current	The current probe shows current instead of voltage. The current probe is the only one mentioned that does not need to actually make contact with the circuit under test. It's simply held near the circuit under test. When using a current probe, the display is in amps per division instead of volts per division. The probe is a current-sensing transformer with the circuit under test being the primary and the probe being the secondary. The current probe is useful in those situations where touching the circuit with any voltage probe at all changes the circuit's operation.

Probe rules

For making amplitude measurements, the following rules apply:

- If you have a choice, select a minimum impedance source. For example, emitter-to-base impedance of a transistor is generally lower than the collector-to-base impedance.
- If you have a choice, select a probe with the highest possible input impedance (Zin) at the frequency of interest.
- When source impedance is unknown, the probe with the highest Zin usually yields the greatest accuracy.
- If the source voltage is totally unknown, it is wise to start with a 100:1 divider probe to reduce the possibility of damaging the probe. This will also indicate whether there is enough signal available to capitalize on the relatively low capacitance of 100:1 divider probe. However, in real-life situations, you probably do not have a 100:1 divider probe. If this is the case, use your standard 10:1 divider probe.

036. Radio and audio frequency signal generators

The specific output of a signal generator can be used to test many different pieces of equipment, such as a receiver or an antenna feedhorn. You will find a signal generator in every electronic maintenance work center. In this lesson, we will discuss the characteristics and applications of radio frequency (RF) and audio frequency (AF) signal generators. The equipment described in this section may not be used at every location but is described to give you a general knowledge of how these generators work.

Radio frequency signal generator characteristics

RF signal generators provide a stable source of frequency ranges that are much higher than audio generators. For example, the HP 8640B RF generator covers a range of 500 kHz to 512 MHz (450 kHz to 550 MHz with over-range). With a doubler, the output can extend to 11,000 MHz. With a variable audio oscillator, the 8640B can extend the output range of the generator down to 20 Hz. This, together with a calibrated output and modulation, permits complete RF and IF performance tests on virtually any type of high-frequency (HF), very high frequency (VHF), or UHF receiver.

Figure 4–6 is a block diagram of a representative RF signal generator. In addition to the necessary power supply, a typical RF generator contains three sections: an oscillator, a modulator, and an attenuator.

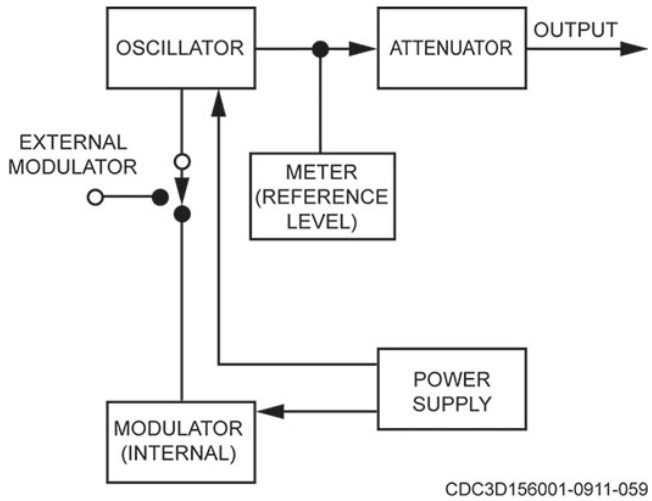

Figure 4–6. RF signal generator block diagram.

Functions of the radio frequency generator

The oscillator section's function is to produce a signal that can be set accurately in frequency to any point within the generator's range. The modulator's function is to produce an audio modulating signal to superimpose on the RF signal produced in the oscillator. An audio oscillator may provide the modulating signal within the generator or it may come from an external source, known as internal modulation and external modulation, respectively. Some signal generators use either of these two modulation methods. In addition, a means of disabling the modulator section is available so the pure unmodulated signal from the oscillator is available for you to use.

The type of modulation you select depends on the particular signal generator application. The modulating signal may be a sine wave, square wave, or pulses of varying duration. Some special generators make provisions for pulses covering a wide range of repetition rates and widths.

In addition to the modulator, most RF generators have connections through which you can apply external modulation sources of any desirable waveform generator. Metal shielding surrounds the unit to keep signals in the oscillator from affecting the circuit under test.

The output circuit of the RF signal generator usually contains a calibrated attenuator and an output level meter. The attenuator lets you select the amount of output required. The output level meter provides an indication and permits control of the generator output voltage.

Applications

You can use a RF generator to test and troubleshoot transmitters, receivers, antenna systems, or ground stations. Some applications for the RF generator are listed below.

- Verifying transmission within designated frequency ranges by comparing transmitter outputs with known radio frequencies.
- Aligning telemetry receivers by injecting the system with range-standard modulated RF.
- Check transmission lines and antenna systems for proper operation.

Audio frequency and function generators

Audio signal generators are used to produce a stable and pure tone signal without distortion. Function generators produce shaped waveforms over a wide range of frequencies. Each of these generators are very important when aligning receivers and testing equipment systems.

Audio oscillator

Audio signal generators produce stable AF signals used for testing audio equipment. Audio signal generators often include resistance-capacitance (RC) oscillators in which the AF is directly produced. In these signal generators, a resistance-capacitance circuit is the frequency determining part of the oscillator. The frequency varies when either the resistance or the capacitance is changed in value.

In other signal generators, however, the capacitance alone is often chosen as the only variable element. The change in frequency that can be produced by this method is limited, and it is usually necessary to cover the entire range of the generator in frequency steps. This is usually accomplished by providing several RC circuits, each corresponding to a specific portion of the entire range of frequency values. The circuits in the oscillator are switched one at a time to provide the desired portion of the AF range.

The amplifier section of the block diagram (fig. 4–7) usually consists of a voltage amplifier and one or two power amplifiers, which are coupled by means of RC networks. The output of the final power amplifier is often coupled to the output control (attenuator) by means of an output transformer.

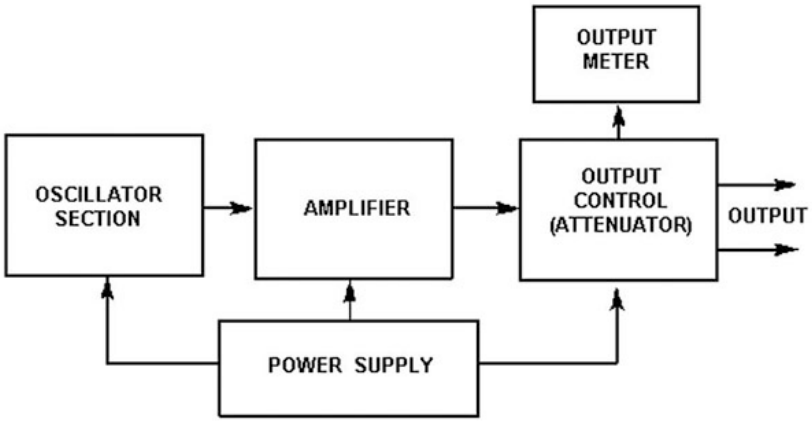

Figure 4–7. AF signal generator block diagram.

The output control section regulates the amplitude of the signal. A commonly used AF signal generator is the HP 651B audio oscillator shown in figure 4–8. This model is a wide range capacitance-tuned oscillator covering a frequency range from 10 Hz to 10 MHz. The oscillator has a stable sine-wave output signal that is adjustable from 10 microvolts (µV) to 3.16V into 50 or 600Ω. Newer programmable generators are available that can generate different wave shapes and can be remotely controlled. For the proper operation of any test equipment, you should always refer to the specific technical manual that describes its use.

Figure 4-8. AF generator.

Function generator

A function generator is usually a piece of electronic test equipment or software used to generate different types of electrical waveforms over a wide range of frequencies. Some of the most common waveforms produced by the function generator are the sine wave, square wave, triangular wave and sawtooth shapes. These waveforms can be either repetitive or single-shot (which requires an internal or external trigger source). Integrated circuits (IC) used to generate waveforms may also be described as function generator ICs. A feature included on many function generators is the ability to add a DC offset.

Although function generators cover both audio and RF frequencies, they are usually not suitable for applications that need low distortion or stable frequency signals. When those traits are required, other signal generators would be more appropriate.

037. Measuring power

Achieving proper output power level is extremely important to system operation. To operate effectively, each component in the system must receive the proper signal level from the previous component and pass the proper level to the succeeding component. If the power level becomes too low, the signal becomes obscured in noise. If the level gets too high, distortion results and a portion, if not all, of the intelligence may become unusable. Therefore, measuring power is critical at every level—from the output of the overall system down to the fundamental subassemblies. The importance of accurate power measurements dictates that the measurement equipment and technique used be accurate.

In this lesson, we will discuss the features and controls of a power meter and the terms related to power measurement. Knowledge and operation of the power meter is very important, because you will frequently need to measure the gain and/or power of a device. You must also be able to determine quickly and accurately the power levels of a signal or noise at any required test point. We will use the Hewlett Packard 436A Power Meter and the Bird 4391M multi-purpose thruline wattmeter for our examples as we discuss the proper way to measure power. We will also discuss the functions of the peak power meter (PPM), RMS voltmeter, and dummy load.

Defining the terms “dB” and “dBm”

The terms dB and dBm are important in power measurement and you need to understand the basic facts about them. Trying to use a power meter without understanding the displayed units would be like driving a car without first knowing how to read road signs. Eventually you will realize the importance. One of the first things you must understand in learning how to use a power meter is the terminology. The two terms—dB and dBm are the most frequently misunderstood terms associated with power meters and power measurement. To help you better understand these terms we will include practical examples of their use in the following discussions.

Decibel

You can take power measurements in Ws, but that means you must deal with very long numbers with many decimal places. This is clumsy and time consuming, especially when you are looking for quick and accurate results. What was needed is a simpler method of dealing with signal power levels and ratios. The decibel and measurements associated with the decibel are the answer to this problem. The decibel does not (in itself) indicate power; instead, it indicates a ratio or comparison between two power levels. Actually, the decibel is part of a larger unit called the bel. As originally used, the bel represented a power ratio of 10 to 1, or 10:1, between the strength of two sounds. To better understand the bel, consider three sounds of unequal power intensity. If the power intensity of a second sound is 10 times the power intensity of the first, its power level is said to be 1 bel above the first. If the third sound has a power intensity, which is 10 times the second, its level is 1 bel above the second. But, since the third sound is 100 times as intense as the first, its level is 2 bels above the first. Thus, a power ratio of 100:1 is represented by 2 bels; a power ratio of 1,000:1, by 3 bels; a power ratio of 10,000:1 by 4 bels; and so forth. You can readily see that the concept of a bel represents a logarithmic relationship, since the logarithm of 100 to the base 10 equals 2 (corresponding to 2 bels), the logarithm of 1,000 to the base 10 equals 3 (corresponding to 3 bels), and so forth.

This logarithmic characteristic of the bel makes it a very convenient means for expressing power ratios, but it is still inconvenient, since the bel is a rather large unit of measure. Usually a smaller unit—the dB is used. Ten decibels equal 1 bel. A 10:1 power ratio represented by 1 bel can also be represented by 10 decibels (10 dB). A 100:1 ratio (2 bels) is represented by 20 dB, and a 1,000:1 ratio (3 bels) is represented by 30 dB, and so forth.

Decibels referenced to a 1-milliwatt standard

As we said earlier, you should understand clearly that the term decibel does not indicate power. Instead, it is a ratio of, or comparison between, two power values. In communications it is very often desirable to express a single value or quantity of power in decibels. This can be done by using a fixed power level as a reference. To simplify calculations, several standard reference levels have been adopted; the most widely used being the 1 mW standard. When 1 mW is used as a reference level, the ratio between the actual power and the 1 mW reference is expressed in dBm. The abbreviation dBm indicates decibels relative to a 1 mW standard.

Using the term "dB"

Remember, the decibel is a measure of the ratio of the power levels of two different sources or of two different signals; thus, it is a measure of comparison. When you say one signal is 2, 3, or 10 decibels stronger or weaker than another you are *not* indicating how much power either signal has. Instead, the dB difference between two signals indicates the degree to which one power level exceeds another. For example, you could say "This signal is 20 dB stronger today than yesterday," but you could not say, "The signal strength is 20 dB." The phrase "20 dB" correctly compares two signals; that is, the signal today compared to yesterday. Look at another example of correct usage of the term.

Since dB is a term of comparative signal power, it can be used to describe an amplifier or another device that changes signal power. In this case, the power gain of the device, in dbase, indicates the ratio of the output power to the input power. A correct statement could be, "The power gain of my stereo amplifier is 60 dB." It would be incorrect to say, "The power output of my stereo amplifier is 60 dB."

Let us apply this information to a real-world situation. For our example, we will use a transmitter with three stages of amplification. During troubleshooting, you can take power measurements at the inputs and outputs of any or all of the stages to determine the gain. For instance, the gain of the driver must be between 34.5 and 41 dB. If it is not, the driver needs to be replaced. Figure 4–9 is a quick reference for dB values and the power ratios they represent. First, remember a 2 to 1 power ratio is about 3 dB. Therefore, you can say, "When you double transmitter power, it has increased by 3 dB," or "If the input to a device is 1W and the output is 2W, then the gain of the device is 3 dB." Another

example is that signal “A” is 3 dB stronger than signal “B.” If signal “B” is 2W, then signal “A” must be twice that, or 4W. Also, signal “B” is 3 dB weaker than signal “A”, meaning that it is half the power of “A”.

POWER RATIO	DECIBELS
2:1	3 dB
4:1	6 dB
8:1	9 dB
16:1	12 dB
32:1	15 dB
64:1	18 dB
128:1	21 dB
256:1	24 dB

dB VALUES BY POWERS OF 2

POWER RATIO	DECIBELS
10:1	10 dB
100:1	20 dB
1,000:1	30 dB
10,000:1	40 dB
100,000:1	50 dB
1,000,000:1	60 dB

dB VALUES BY POWERS OF 10

CDC3D156001-0911-057

Figure 4–9. dB values by powers of 2 and 10.

Using the term “dBm”

The term dBm indicates a measure of power above or below a standard of 1 mW. The advantage of this term is that it reflects both gain and power level because of the standard 1 mW reference. The term is used much the same as dB, except that one of the two signals involved always has a strength of 1 mW and so the term dBm can reflect a power level while the term dB cannot.

For instance, if the output is 2 mW, it would be correct to say “this device has an output power level of 3 dBm.” The same device would have an output power level of 6 dBm if the output power were 4 mW.

Power meter features and controls

The Hewlett-Packard 436A power meter, seen in figure 4–10, is a typical general purpose, average-power, power meter intended for manual and automatic measurement of RF and microwave power levels. It measures either absolute or relative power.

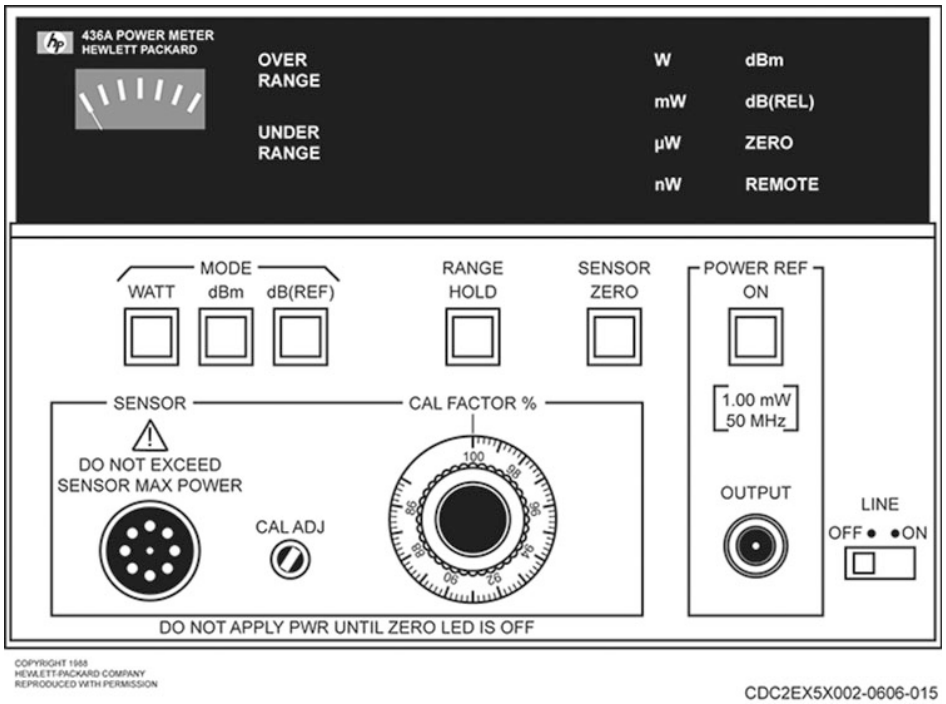

Figure 4–10. Power meter.

The 436A can be operated either manually or through the use of an interface bus and software, and it can be programmed to operate fully automated. The meter's operating features are described in the table below.

Hewlett-Packard 436A Power Meter Operating Features	
Feature	**Description**
Digital display	This particular power meter has a four-digit, seven-segment, light-emitting diode (LED) display, with large digits that are easy to see, even in a high-glare environment.
Choice of display units	Input power to the 436A can be displayed in any of these units: **UNITS** / **ABBREVIATION** Watts / W Milliwatts / mW Microwatts / µW Nanowatts / nW Decibels referenced to a 1 mW standard / dBm Relative decibels / dB REL The meter displays absolute power in either watts or dBm, and relative power in dB.
Relative power measurement	Power measurements relative to a user determined power reference level are made possible by pressing the spring-loaded dB reference (REF) switch. Pressing dB REF zeros the display of any input power and causes the digital readout to be stored as a dB reference. After this point, any change in input power from this reference is displayed in the dB relative (REL) mode as telephone demarcation box, in increments of 0.001 dB.

Hewlett-Packard 436A Power Meter Operating Features	
Feature	**Description**
Auxiliary meter	The 436A has an analog meter that complements the digital display by showing fast changes in power level. It is ideal for monitoring “peaking” output from a transmitter or other variable power devices.
Frequency and power range	The frequency and power range of the power meter/power sensor system are determined by the particular power sensor selected for use. With the HP 8480 series power sensors available for the HP 436A: • Overall frequency range of the system is 100 kHz to 50 gigahertz (GHz). • Overall power range is –70 dBm to +44 dBm (100 picowatt (pW) to 25 W).
Autorange	This power meter automatically switches through its five ranges to provide completely “hands free” operation. The RANGE HOLD switch locks the power meter in the selected range when you do not want autoranging.
UNDERRANGE and OVERRANGE indicators	There is an UNDERRANGE indicator light in the display to tell you if the input power is too small to measure on the selected range, if autorange is disabled. Also, there is an OVERRANGE indicator light to tell you if the input power is too large to be measured on the selected range, if autorange is disabled. There is a 20 percent over-range capability in all ranges.
Power units and mode annunciator	The 436A’s annunciator provides an error-free display by showing power units when it is in the WATT mode. The mode annunciator indicates the mode of operation: that is, dBm, dB REL, ZERO, or REMOTE.
Automatic sensor recognition	The power meter continually decodes the sensitivity of the connected power sensor. This information is then used to control the digital display decimal point location automatically. Also selecting the WATT mode operation, lights the appropriate power units annunciator.
Auto zero	You zero the meter by merely pressing the SENSOR ZERO switch and waiting until the display shows all zeros before releasing it. The meter is ready to make measurements as soon as the ZERO light in the mode annunciator goes off.
RF blanking output	A low signal from this output constitutes a blanking signal when the SENSOR ZERO switch is engaged. This is a good way to remove the RF input signal to the power sensor during the automatic zeroing operation.
Recorder output	This provides a linear output voltage with respect to the input power level. This output can be used to drive a graphing device for printing a graph of the power levels. It can be connected to a digital multimeter to give a DC voltage readout corresponding to the power levels, or the recorder output can be returned to the input power source for stabilization.

Hewlett-Packard 436A Power Meter Operating Features	
Feature	**Description**
Calibration accuracy	A 1.00 mW, 50-MHz reference output is available on the front panel for calibrating the power meter and power sensor as a system. Calibration is done using the calibration adjustment (CAL ADJ) and CAL FACTOR percent controls. • The CAL ADJ control compensates for slight sensitivity associated with a particular type of power sensor. • The CAL FACTOR percent control compensates for mismatch losses over the frequency range of the power sensor.
Interface connector	This feature provides a computer connection for automated tests. In this configuration, the 436A Power Meter would be controlled by the computer's software commands.

Radio frequency peak power meter

PPMs combine continuous wave (CW) power measurement with the ability to make precise peak power measurements at any point on a pulsed waveform. This dual, built-in capability lets you measure and analyze pulsed waveforms with a single instrument. There are many different types of PPMs scattered across RAWS facilities. The information presented here will be a general overview that will encompass most of the characteristics of any standard PPM.

These meters let you view the pulsed waveform and critical parameters on a built-in display. A reference cursor pinpoints the precise measurement location on the waveform. Sampling lets you measure the same point on each pulse at over 70 measurements per second. Modes of operation are indicated both by information on the display and by lights on the front panel. Changes in mode or test parameters can be accomplished with the front panel keypad or, for some operations, the large spin knob on the front panel, which can be used as an analog adjustment for certain parameters.

Some PPMs have calibration systems that use the inherent linearity and stability of an ovenized thermistor to accurately calibrate high-speed diode sensors from an ambient temperature of 0 to 50 degrees Celsius. This capability lets a technician make absolute power measurements with increased accuracy. The purpose of the PPM's self-calibration function is to ensure that measurement accuracy will be maintained despite changes in detectors, changes in detector diode temperature, or other changes that might occur in the PPM's analog circuits.

Power sensors

In order to provide a usable signal to the power meter, a device must be used to sample the RF energy and convert it from its natural form into a form that can be understood by the power meter. This device is called a power sensor but is sometimes referred to as a power detector.

A power sensor operates as a transducer and converts energy from one form into another form. In the case of a power meter power sensor, the sensor converts RF energy into a linear DC voltage that can be used by the power meter.

Many different power sensor technologies have been used over the years. Most of the older technologies measured temperature changes from the heat generated by the RF energy. These were transducers such as bolometers, calorimeters, thermistors, and thermocouples. Today's more efficient power sensors do not rely on heat generation; instead, they use diode detectors.

Offset

The offset feature of the instrument digitally offsets the displayed power value within a range of -40 to +90 dB. The offset will be in effect whether the measurement is in dBm or linear power in mW.

The offset function is useful for two main purposes. First, it provides the ability to add or subtract minor correction factors to correct errors that might be introduced by attenuators or other devices in the test setup. Secondly, it provides the ability to adjust the reading in high power measurement situations where it is desirable to read the correct power directly on the display despite the fact that the unattenuated power being tested is well above the measurement range of the power sensors.

In the latter case, a high-power coupler is required to attenuate the signal to a level that can be safely measured by the sensor (less than +20 dBm). If the exact coupling factor of the coupler being used is known, the offset feature can then be used to subtract it out. Then the display will accurately show the high-power present at the device under test. However, the sensors only see the coupled power that has been attenuated to avoid burning out the detector diode.

The PPM has a built-in warning system to advise you of mild overloads to the detectors. Large overloads which are usually the result of a failure in the device under test or leaving an attenuator out of the test setup, cannot be prevented because of the speed at which these failures happen. However, you will be advised by a prompt when the power level exceeds the preset power warning level.

Root-means-square voltmeter

This meter measures the actual RMS value of AC voltages between 100 (µV) and 300V. It essentially calculates the equivalent DC current value of an AC waveform. It determines the effective, or DC heating, value of any AC wave shape.

True RMS voltmeters are often preferred because they can measure both sinusoidal and nonsinusoidal AC waveforms. Remember that sinusoidal waves are those sine waves that are pure, without distortion, and have symmetrical transitions between peaks and valleys. Nonsinusoidal waves are distorted, irregular patterns with spikes, pulse trains, squares, triangles, sawtooths and any other ragged or angular waves.

Some RMS voltmeters provide a DC output, which is proportional to the front panel meter reading. By using this voltage to drive auxiliary equipment, the meter functions as an RMS AC-to-DC converter.

Wattmeter features and controls

The 4391M RF Power Analyst is an RF directional thruline wattmeter designed to measure RF power in 50Ω coaxial transmission lines. When operated in this manner, it is used to determine power flow, load mismatch, and amplitude modulation. It will measure CW, AM, FM, single-sideband, and pulse modulation. It reads in peak envelope power (PEP), or CW power in mW, W, and kW depending on the plug-in elements used. The frequency range is 450 kHz to 2.3 GHz. It has internal Nickel Cadmium (NiCad) batteries for portable use or AC power can be connected for in-house use. The following paragraphs cover the 4391M's general description, connections, and operating features.

General description

The 4391M wattmeter (fig. 4–11) is an insertion type digital wattmeter placed between the transmitter and dummy load or antenna. The plug-in elements are selected based on the frequency and power to be measured. The highly-sensitive elements contain coupling circuits which sample the traveling RF waves. It is important that the arrows on the plug-in elements flow according to the traveling RF waves; otherwise, the RF waves traveling in the opposite direction of the arrow cancel each other out. The user sets two switches on the 4391M's front panel to correspond to the power range of the forward element. In any of the modes of operation described, the instrument can recall from memory the lowest or highest reading taken or tell the operator whether the newest reading is less than, equal to, or greater than the previous reading.

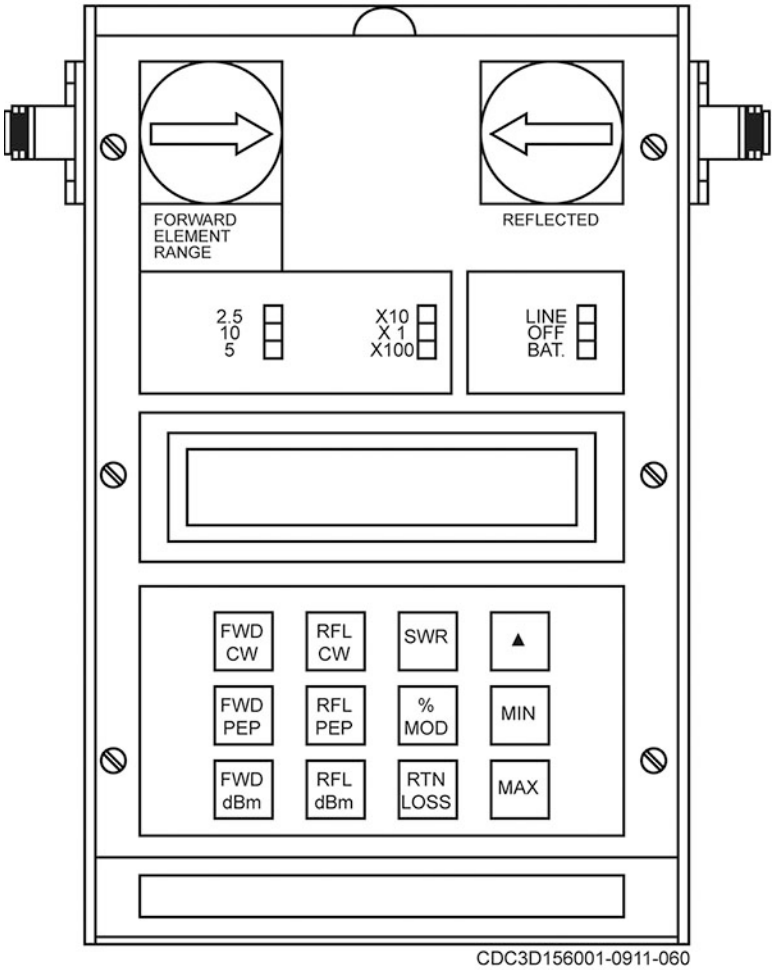

Figure 4–11. 4391M RF power analyst.

Connections

The 4391M wattmeter is normally supplied with two female N-type connectors. Once the wattmeter is installed in the coaxial line between the transmitter and dummy load or antenna, you must select a plug-in element, which corresponds to the frequency and power levels to be measured.

In order to take full advantage of the wattmeter's capabilities, you should use two elements in a 10:1 ratio of power range. If using only one element, fill the other socket with a dust plug or a higher power element. Also, for greatest accuracy, select the element(s) having the lowest possible power range that will not result in over-ranging. The table below lists elements required for each mode of operation.

Wattmeter Element Locations		
Mode	**Forward (FWD)**	**Reflected (RFL)**
FWD CW	X	
RFL CW		X
SWR	X	X*
FWD PEP	X	
RFL PEP		X

Wattmeter Element Locations		
Mode	**Forward (FWD)**	**Reflected (RFL)**
% mod	X	
FWD dBm	X	
RFL dBm		X
Return (RTN) Loss	X	X*

* Reflected element must have a nominal power range one tenth that of the forward element.

The higher power element is placed in the socket marked “forward” and its arrow pointed in the direction of forward power flow (toward the antenna or load). The lower power element is placed in the socket marked reflected and is normally pointed in the direction opposite to forward power flow (toward the transmitter). The elements are clamped in place by the hold-down catches on the face of the line section. These catches must be used to avoid error caused if the element does not contact the bottom or seating plane of the socket. With the element(s) in place, set the range switches to correspond with the nominal power range of the elements. For example, if the forward element is 5W element, the switches are set at 5 and x1. For a 250W element they are set at 2.5 and x 100. Sometimes you need to use mW or kW as the unit of measure. In other words, 1W becomes 10 x 100 mW and 2500W becomes 2.5 x 1 kW.

Operating features

The 4391M wattmeter has nine modes of operation that are selected by pressing the mode keys momentarily. In addition, each mode has three output options selected by pressing the modifier keys that are the MIN, MAX, and delta keys. Refer to figure 4–11 for the location of each key as we cover the different operational modes in the following table.

4391M Wattmeter Operational Modes	
Mode	**Description**
Reading forward power	Install the meter and correct element for the item under test based on frequency and power and move the power switch to LINE or BAT depending on the power source. When powered up, the 4391M wattmeter defaults into the forward CW power mode. If the unit is already operating, the forward CW power mode is selected by pressing the FWD CW key momentarily. Here, the wattmeter measures peak and minimum square root of power and combines them to formulate CW power. If the applied power exceeds 120 percent of the range, two right facing arrowheads will be displayed.
Reading reflected CW power	Operation of the reflected CW power mode is identical to that for forward CW power described earlier with the following exception: the readings are taken from the element in the socket marked “reflected”.
Reading SWR	Two elements are required for this mode and they must have a 10 to 1 power range ratio. SWR power will be displayed if the forward power is between 10 percent and 120 percent of the full scale and the reflected power is less than 120 percent of the reflected element range. Two arrows pointing to the right indicate over-range; while two left pointing arrows indicate under-range or too little power.

4391M Wattmeter Operational Modes	
Mode	**Description**
Measuring PEP	PEP measurements are made in the same manner as CW power readings described earlier, except that the FWD PEP and RFL PEP buttons are pressed and the readings are displayed directly as peak power.
Measuring amplitude modulation	Modulation is displayed directly in percent. It will be displayed as long as the average signal is about 10 percent and the peak incident power of the signal is below 400 percent of the element's range. For better accuracy, measure the average CW power levels at greater than one third of element's full scale. Over-modulation will be indicated as 99.9 percent.
Measuring power in dBm	Operation of the forward and reflected dBm modes is identical to the forward and reflected CW power modes, except that the resulting reading is converted to dBm. It should be noted that in doing this conversion, the range set on the slide switches is assumed to be W rather than kW or mW. If not, 30 must be added to all dBm readings when the range is in kW, or subtracted from all readings when it is in mW. An error message is displayed if CW power is more than 24 dB below, or peak power is more than 6 dB above the nominal element range.
Measuring return loss	The measurement of return loss is the same as that of SWR except that the result is displayed in dB. In other words, a reading of 21.6 indicates that reflected power is 21.6 dB down from forward power.
Monitoring maximum and minimum readings	While operating in any of the modes described above, the wattmeter will continuously keep track of the highest and lowest reading obtained. To recall the maximum or minimum readings, hold the desired MAX or MIN key down. When the key is released, the meter goes back to displaying the current value of the parameter being measured. Recalling maximum or minimum does not stop the meter from continuing to monitor the current value and updating the minimum and maximum registers. To clear the minimum and maximum register, the mode key must be pressed again or a new selected. For example, if CW power deviations are to be monitored, the wattmeter is installed, turned on, and allowed to stabilize. Once the system has stabilized, the FWD CW key is pressed to clear the MAX and MIN registers. At any time during test, the MAX and MIN keys can be used to recall the maximum and minimum values without affecting the test. However, pressing FWD CW or changing modes will clear the registers.

4391M Wattmeter Operational Modes	
Mode	**Description**
Using the peaking aid	The peaking aid is useful for making adjustments to optimize any of the parameters which the wattmeter measures. After the mode is selected, the delta (Δ) key is pressed momentarily. This blanks the least significant digit of the display, and replaces it with a right facing arrowhead if the measured quantity is increasing and a left facing arrowhead if it is decreasing. If there is no change, the digit is left blank. To find a peak, begin making the adjustment in whichever direction produces a right facing arrowhead and continue slowly in that direction until the arrowhead turns around. At this point the peak has been reached. To check to make sure the peak has not been passed, press the MAX key to read the highest value read and release it to read the current value. The two should be the same. Desired minimum levels such as reflected power or SWR are found in a similar manner.

Dummy load

Often, transmitters must be tested or aligned without an antenna connected. This is where the dummy load comes in. If you test a transmitter without a load, such as an antenna or a dummy load, the transmitter could be damaged. Also, operating a transmitter without a load causes it to operate differently than with a load. As a result, the adjustments made without a load may be incorrect. A dummy load is constructed so that RF power is absorbed with minimal reflections and the absorbed energy is converted to heat.

Since dummy loads are nonreactive, and absorb power without creating reflections, they provide the ideal method for isolating transmitter problems such as a high VSWR or waveguide arcing by allowing you to place a load at various connection points along the transmission line. Finally, if the appropriate dummy load is used, there is no fear of radiation during maintenance.

038. Measuring line levels, signals, and distortion

There are a variety of audio signal generating and measuring devices available to determine how much loss is present over a copper or optical transmission line. In this lesson, we will look at the multipurpose personal transmission test set which combines several different test and measurement capabilities into a single handheld device. Though there are many different manufacturers of similar devices, our discussion will focus on the most commonly used Ameritec Model (AM)–48. We will also cover the time domain reflectometer (TDR), optical time domain reflectometer (OTDR), distortion analyzer, noise figure meter, and tone generator with inductive amplifier.

AM–48 transmission test set

The AM–48 is a combination transmission test set and telephone “butt-set.” The transmission test set portion tests the integrity and quality of 2-wire or 4-wire voice and data transmission lines by sending selected analog signals and measuring standard parameters of the received signals. The telephone “butt-set” portion enables technicians to communicate with telephone switching equipment through the use of pulse, dual tone multi-frequency (DTMF), and multi-frequency (MF) dialing.

AM–48 features, specifications, and configurations

The following table provides a description of the major elements of the AM–48. While not all-inclusive, it covers the main features, specifications, and configurations.

AM–48 Features, Specifications, and Configurations	
Element	**Description**
Tone generation	The AM–48 is capable of generating user defined audio signals from 200 Hz to 20 kHz at levels from –50 to +10 dBm. The unit also contains presets for 3-tone slope sweeps and a fixed 1004 Hz tone. User defined sweep tone sequences are programmable as well.
Signal measurement	The unit's measurement function can handle levels ranging from –65 to +10.9 dBm (absolute or relative) at frequencies from 0 to 19,999 Hz. Idle channel noise, noise with tone, and signal-to-noise ratio measurements are also possible.
Miscellaneous features/specifications	Some additional features of the AM–48 include: • High-impedance bridge. • Talk and listen capability. • 600 or 900 Ω terminations. • On-board memory for up to 10 user defined test set-ups. Four AA 1.5-volt alkaline or NiCad rechargeable batteries can power the unit. An AC adapter is also provided to connect to 115 VAC, which also recharges the NiCad batteries when used. The alkaline batteries provide approximately 6–7 hours of use, while the NiCads are limited to about 3–4 hours. Connection to circuits using this test set is available through a variety of provided and optional cables. • The standard cable is a standard RJ–11 telephone plug connected to four color-coded alligator clip style connectors. • Additional optional cables can be purchased or fabricated locally as needed.
Configurations	The AM–48 can be used in three basic configurations: end-to-end, loopback, and testing with responders. We will briefly touch on end-to-end, since this configuration is most commonly used by RAWS technicians. Two AM–48s are required for this configuration. One is configured as the "sender" and the other as the "measurement" unit. This configuration is commonly used for testing things such as remote radio lines interfaced into a control tower voice switch and navigational aid to air traffic control facility remote status indicator lines. One of the most common mistakes when measuring line levels is the selection of the "terminate" or "bridge" mode. • If your line is isolated (disconnected) from the equipment, you must use the "terminate" mode and select the proper impedance of your line. • If your equipment remains connected, you must use the "bridge" mode. For proper measurements, always follow your technical order procedures for proper test equipment set-up. Failure to follow these procedures will result in erroneous readings.

Front panel

The front panel contains the liquid crystal display and keypad. Additionally, there are two slide switches on the left side, 12 color-coded rocker switches along the right and left sides, and a thumb wheel speaker volume control; microphone slots are also located on the left side. For our course purposes, we will review only the side controls. Most of the keypad buttons are primarily used for data entry, but some are multipurpose. Additionally, the display is for the most part self-explanatory based upon the test set's selected use. For more information on these two areas consult the AM–48 commercial manual. Figure 4–12 shows the front view of the AM–48; refer to this as we cover the individual controls in the following table.

AM–48 Front Panel Controls		
Control	**Figure Number**	**Description**
Power (toggle + momentary)	1	Set to <ON> position for power to be on continuously. To allow the AM–48 to power down by itself, turn the power on by momentarily pressing the switch toward the <ON/OFF> position. The power will shut off automatically after the TIME OFF setting, if the unit is left unattended. To turn the power off, momentarily press the switch toward the <ON/OFF> position.
Display Select (3 position)	2	Set <ABS> to view MEASUREMENT mode in absolute reference. Set <REL> to view MEASUREMENT mode in relative reference. Set <SEND> to view the SEND mode.
Dual Function (2 position)	3	Controls the display damping. • <DAMP> gives a display update of two times per second (used with widely fluctuating signals to update the display more often for better sampling of the measurement). • <OFF> gives a display update of four times per second. Controls the monitoring point of the receive monitor speaker (<MON RCV> position of Switch 14). • <DAMP> gives a monitoring point at the output of the auto-range amplifier, significantly increasing the speaker level.
Filter Select	4	Dual momentary switch. Rock up or down to move FILTER menu cursor left or right to select desired noise-weighting filter.
Measure Select	5	Dual momentary switch. Rock up or down to move MEASURE menu cursor left or right to select desired measure mode.
Send Select	6	Dual momentary switch. Rock up or down to move SEND menu cursor left or right to select desired send (generator) mode.
Three Position Toggle	7	Set <MF> to dial multi-frequency tones from the keypad. Set <DTMF> to dial DTMF (Touch Tone) from the keypad. Set <SHIFT> to enable the auxiliary functions on the keypad.

AM–48 Front Panel Controls		
Control	**Figure Number**	**Description**
Two Position Toggle + Momentary	8	Set <SF SKP> to skip the signaling frequency band of 2450 Hz to 2750 Hz, avoiding the accidental transmission of signaling frequencies. Set <NOR> to allow the internal signal generator to be stepped through all frequencies within its range while in the SWEEP and VAR SEND modes. Press <X TONE> to momentarily send a 2713 Hz tone, overriding the internal signal generator. This feature is useful for actuating loopback devices.
Dual Momentary Switch	9	Press <RCL/STO> to recall and/or store up to 10 test setups. Press <PRINT> to send unit setup and measurement results to the printer port, <PRT>.
Three Position Slide Switch	10	Set <2W> to connect the internal measurement circuitry and signal generator across the 2-wire line at the <SND> jack. • The signal generator source impedance of 600 or 900 Ω terminates the line in all signal generator modes except QUIET. • In QUIET mode, the line will be terminated only if Switch 13 is set to <TERM>. Set <4W> to connect the internal measurement circuitry to the <RCV> pair, and the internal signal generator to the <SND> pair. Set <4W REV> to reverse the send and receive pairs.
Two Position Slide Switch	11	Set <600 Ω> (usual position for 4-wire) to apply 600 Ω across the receive pair when Switch 13 is set to <TERM> and, set the send pair source impedance at 600 Ω. Set <900 Ω> (usual position for 2-wire) to apply 900 Ω across the receive pair when Switch 13 is set to <TERM> and, set the send pair source impedance at 900 Ω.
Three Position Toggle Switch	12	Set <TONE> to come off-hook to dial either MF or DTMF (set Switch 7 to <MF> or <DTMF> accordingly). • <TONE> causes a 200 Ω DC short across T & R of the send pair to simulate a telephone off-hook condition on 2-wire dial access lines. • Press a button on the 16-button keypad to generate the appropriate DTMF or MF tone pair, depending on the setting of Switch 7. Set <PULSE> to dial pulse. Switch 7 must be set at either <MF> or <DTMF>. • <PULSE> causes a 200 Ω DC short across T & R of the send pair to simulate a telephone off-hook condition on 2-wire dial access lines. • Press a button on the 16-button keypad while in this mode to cause the DC short to make and break at 10 pulses per second (PPS), 60 percent break, creating dial pulses in accordance with the button pressed. Set <ON HK> to open the DC across T & R of the send pair to simulate a telephone on-hook condition on 2-wire dial access lines. The 16-button keypad stays operational, and if pressed, will send out DTMF or MF tones as selected by Switch 7.

AM–48 Front Panel Controls		
Control	**Figure Number**	**Description**
Two Position Toggle Switch	13	Set <TERM> to terminate the receive (<RCV>) line with a resistive impedance as selected by Switch 11. Set <BRDG> to terminate the receive line and bridge it only with the impedance of the measurement circuitry (>25 kΩ) across the receive pair.
Speaker Control (2 position toggle + momentary)	14	Set <MON RCV> to connect the internal speaker to audibly monitor the *receive* pair. Set <MON SND> to connect the internal speaker to audibly monitor the *send* pair. Push <TALK> to mute the speaker and connect the internal microphone to allow “talking” over the send pair. • This feature is useful in voice communication with an assistant technician at the distant end of the transmission line being tested. • It also allows the AM–48 to be used as a conventional push-to-talk telephone set on 2-wire dial networks.
Volume Control	15	This controls the gain of the internal speaker amplifier. Use this to set the speaker or earphone loudness to a comfortable level.

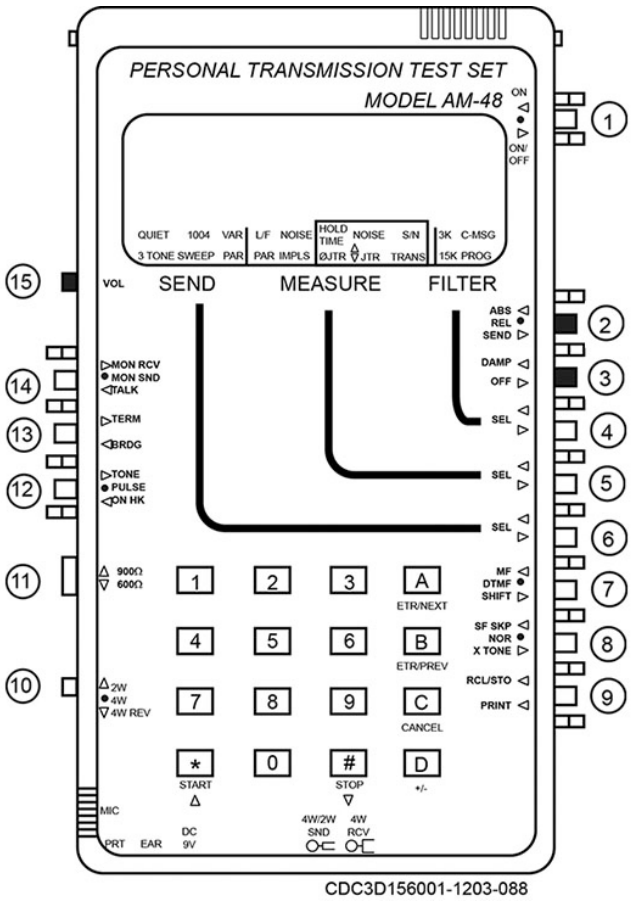

Figure 4–12. AM–48 front view.

Time domain reflectometer

The TDR is a device we use for measuring the reflectance of a radiant energy. It is a portable test set that uses radar principles to test copper-core cables and provides a visual display of cable faults.

Operation

The TDR looks much like an oscilloscope in appearance (fig. 4–13). It is actually a specialized sort of oscilloscope. Test pulses are transmitted through the cable jack. Reflections are received at the same jack and their amplitude and shape are shown on the CRT display. We use the TDR to locate discontinuities (impedance changes) in cable lengths. It can locate splices, water in the cable, split pairs, and discontinuities or faults. The display has horizontal and vertical lines drawn across it. The horizontal lines represent amplitude and the vertical lines represent time. The display is an oscilloscope type display, amplitude versus time (as a matter of fact, you can set up your oscilloscope to function as a TDR).

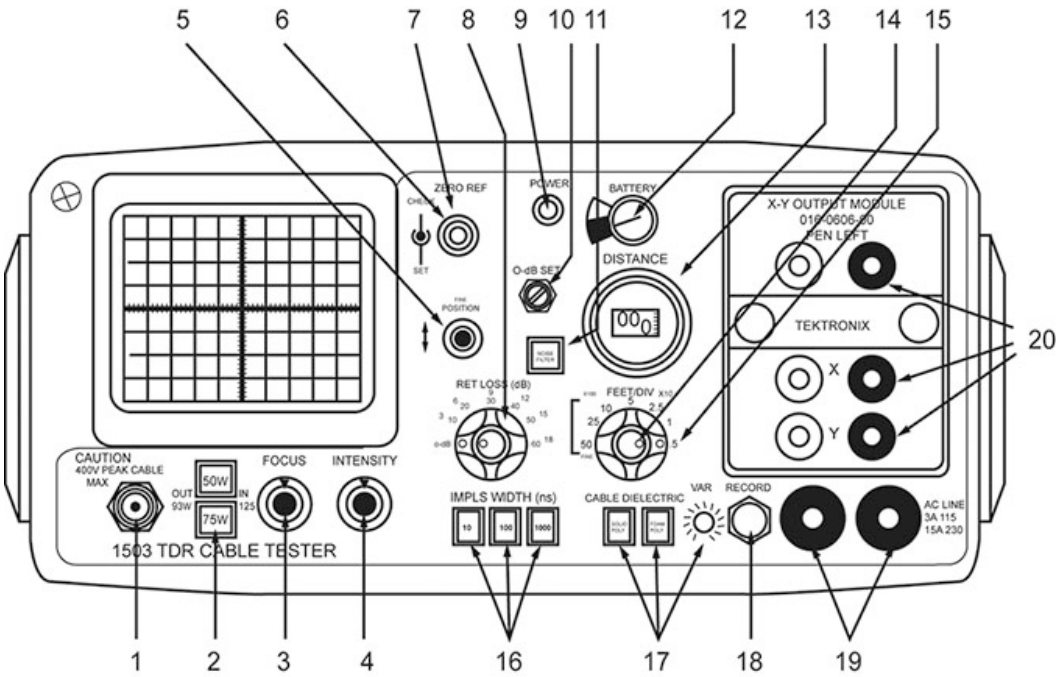

1. CABLE
2. IMPEDANCE SELECTORS
3. FOCUS
4. INTENSITY
5. POSITION / FINE
6. ZERO REF CHECK
7. ZERO REF SET
8. RET LOSS (db) / FINE
9. POWER
10. 0-dB SET
11. NOISE FILTER
12. BATTERY METER
13. DISTANCE
14. X10, X100
15. FEET / DIV
16. IMPLS WIDTH
17. CABLE DIELECTRIC (SOLID POLY, FOAM POLY, VAR)
18. RECORD
19. AC LINE FUSES
20. X, Y, AND PEN LEFT

CDC3D155001-1010-016

Figure 4–13. Tektronix 1503 time domain reflectometer.

Time domain reflectometer principles

The principle of operation for the TDR is similar to that of radar. We apply a pulse from the TDR to a cable under test. Any impedance changes in the cable causes a portion of that voltage or energy to be reflected back to the cable input. Knowing the travelling pulse speed (speed = speed of light times the velocity factor of the cable in question), we can find the distance to any discontinuities in the cable as well as the time it took the pulse to travel to the discontinuity.

To demonstrate this, say Airman Smith departs Keesler Air Force Base, Mississippi traveling straight to point X at a constant 80 kilometer (km) per hour, and returns directly in 4 hours. If her speed never changed, we can figure that she traveled 320 km. Since she left and returned, we can safely assume she spent half of that time traveling to, and half traveling from point X. Therefore, point X is exactly 160 km from Keesler. By measuring the time anything travels and comparing that time to its speed, we can find the distance traveled. We can also look at the shape of the pulse on its return and deduce certain information about the discontinuity.

This entire process is displayed on the TDR screen. The CRT displays the pulse's progression from its application to the cable on the left-hand side of the display to the reflected pulses return on the right. From the display, one can determine the distance down the cable to where the fault is and the type and severity of the fault. If there is a perfect impedance match, there is no reflected pulse.

Many TDRs have a chart recorder as an optional accessory. The recorder records the entire length of the display on chart paper.

Optical time domain reflectometer

When you are splicing fiber optic cable, it is very important to hold the splice's attenuation to a minimum. Measure the loss through each splice with an OTDR. In simple terms, an OTDR is an oscilloscope with a built-in laser that sends a light pulse into the end of a fiber and measures the loss of light as it is reflected back to the source. If we know the speed of light through the fiber, we can calculate the distance to cable ends, splice points, and interconnects from each light pulse's time of flight. There are many OTDRs on the market today, and manufacturers will continue to improve their capabilities. For our discussion here, we will use general terms that encompass all OTDRs.

An OTDR measures distance and attenuation in an optical fiber by transmitting an optical pulse through the fiber and measuring the optical power reflected back to a sensor in the OTDR instrument. It calculates distance along a fiber by measuring the interval between a pulse's launch into a fiber and the time the reflected energy is detected at the sensor. Loss is calculated by comparing the received power to the transmitted power. As the pulse moves along the fiber, thousands of data points corresponding to distance and relative power are gathered and displayed on the screen. The result is a linear trace of the fiber displayed as distance from the source (horizontal axis) versus relative power (vertical axis).

The power reflected back from the fiber is caused primarily by Rayleigh scattering. This scattering occurs as the light strikes a non-uniform part of the core's molecular structure or a non-silicon dioxide particle and is scattered in a spherical pattern. The part of the scattered energy that travels back toward the optical source is called the "backscatter," and it is the basis for OTDR measurements. Every fiber has a unique "backscatter coefficient"—a measure of how well optical energy is reflected back to the source. The backscatter coefficient depends on the fiber's relative refractive difference (the difference between the indices in core and cladding), the core refractive index, and the core diameter. Further, cables using loose-tube construction filled with a clear gel can reduce an OTDR's ability to detect fiber breaks. The gel can act as an index-matching material, which reduces the glass-to-air index difference and, thus, changes the fiber's backscatter coefficient.

In simpler terms, the backscatter coefficient depends on the density of non-uniformities within a given cross-sectional area of a fiber. A fiber with a large backscatter coefficient produces more backscattered energy because there are more non-uniformities per unit area than a fiber with a small backscatter coefficient. Since the major portion of loss in fibers is due to Rayleigh scattering, the loss/km value is closely related to the backscatter coefficient.

Distortion analyzer

The distortion analyzer is a narrow-band rejection filter, which when properly tuned, removes the fundamental frequency of a signal so that the amplitude of the remaining harmonics can be measured all at once. The distortion analyzer is used for a fast, quantitative measurement of total distortion.

The distortion analyzer measures total RMS distortion and gives a ready determination of percentage of distortion. The procedure is quick and simple. The distortion analyzer is first switched to the set level function, which converts the instrument to a broadband voltmeter.

The analyzer's attenuators and amplifier gain are then adjusted to place the indicating meter's pointer on a reference mark. The function switch is then set to distortion. This adjustment will insert the rejection filter in the circuit. The rejection filter is tuned so as to eliminate the fundamental frequency of the input signal, as observed by a dip in the meter's needle. The analyzer is now reading the RMS sum of the remaining harmonic components. The attenuator is readjusted to bring the pointer upscale.

The distortion analyzer is calibrated so that the final reading, referenced to the attenuator setting, shows percentage distortion directly or in terms of dB units. This distortion is given as the ratio of the sum of the harmonics to the value of the total signal. It is not just the fundamental as given in the equation. However, the difference between this ratio and actual percentage distortion previously explained is less than 0.5 percent for harmonic distortion. Some types of distortion analyzers can be used as a distortion analyzer or a high-impedance voltmeter.

The distortion analyzer has a broadband amplifier, a tunable frequency-selective rejection circuit, and a high-impedance voltmeter, which are all designed into one case. The solid-state rejection circuit uses a capacitively tuned Wien bridge circuit that provides more than 80 dB of fundamental rejection. Maximum input sensitivity at 0.1 percent distortion setting is equal to 300 microvolts root-means-square (VRMS) for measuring low-level residuals. For both distortion and voltmeter operation, the input impedance is 1 MΩ. There is a single input terminal for both modes of operation.

The solid-state voltmeter section uses a large amount of feedback to ensure stability and flat frequency response from 5 Hz to 3 MHz. There are 13 ranges in 10 dB steps. The voltmeter has a range from 300 μV to 300 VRMS full scale.

Noise figure meter

The noise figure meter, such as the Keysight (formerly Agilent) N8973A Noise Figure Analyzer, generates a 28 VDC pulse signal to drive a noise source (HP346A/B). This generates noise to calibrate the noise figure meter or to drive the device under test (DUT), as seen in figure 4−14. The output of the DUT is then measured by the noise figure analyzer. Since the input noise and signal-to-noise ratio of the noise source is known to the analyzer, the noise figure of the DUT can be calculated internally and displayed. For certain applications (mixers and receivers), a local oscillator signal might be needed. Also, certain parameters need to be set up in the noise figure meter before the measurement, such as frequency range, application (amplifier/mixer), and so forth.

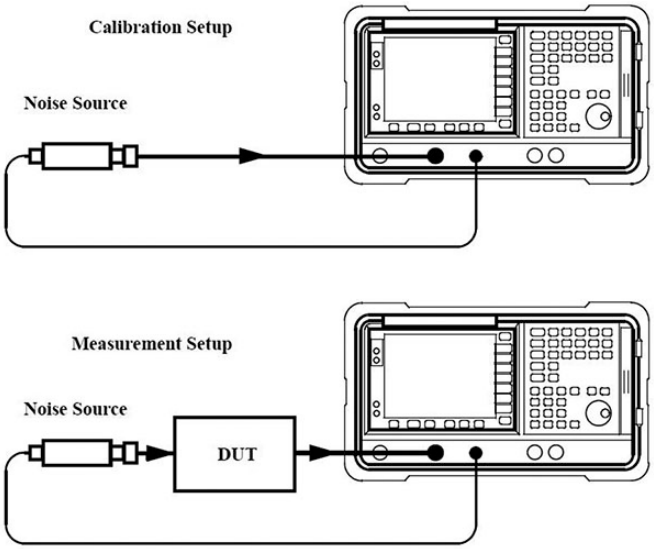

Figure 4–14. Noise figure meter.

Using a noise figure meter is the most straightforward way to measure noise figure and in most cases, is also the most accurate. You can measure the noise figure over a certain frequency range, and the analyzer can display the system gain together with the noise figure to help the measurement. A noise figure meter also has limitations. The analyzers have certain frequency limits. For example, the Agilent N8973A works from 10 MHz to 3 GHz. Also, when measuring high noise figures, for example, noise figure exceeding 10 dB, the result can be very inaccurate. This method requires very expensive equipment.

Tone generator and inductive amplifier

The tone generator and inductive amplifier is sometimes referred to as a “fox and hound” and are used in troubleshooting or identifying metallic cabling (fig. 4–15). They are often used together to identify twisted communication pairs, coaxial cables, and de-energized AC wiring.

Figure 4–15. Tone generator and inductive amplifier.

The tone generator applies an audio tone to a pair or cable and the inductive amplifier is used to listen for the generated tone at the other end. This equipment is particularly useful when a wire is part of a huge bundle, at a cross-connect, or identification is necessary at a remote location. Usually the tone generator has several selectable tones to test continuity as well as line polarity, if equipped, and can generate a tone for several miles, depending on the line condition. Both the generator and amplifier are battery powered for portability. The inductive amplifier has a control to adjust the incoming tone volume level.

039. Measuring frequency

The traditional way to view electrical signals is with an oscilloscope in the time domain. The time domain is used to recover relative timing and phase information that is needed to characterize electric circuit behavior. However, not all circuits can be characterized uniquely from just time domain information. Circuit elements such as amplifiers, subcarrier oscillators, mixers, modulators, detectors, and filters are best characterized by their frequency response information. This frequency information is best determined by viewing electrical signals in the frequency domain with a spectrum analyzer. Before we dig into spectrum analysis, we will cover the basic electronic frequency counter specifications.

Electronic counter functions

The electronic counter combines state-of-the-art processing systems and highly stable quartz crystals to measure time and frequency. It provides a greater accuracy for time and frequency measurement than for any other electrical parameter. Electronic counters measure frequencies and totalize events from low audio frequencies up to 550 MHz. Some methods are available to extend the frequency range of counters to more than 20 GHz. The functional capabilities of the electronic counter are detailed in the table below.

Electronic Counter Functions	
Function	**Description**
Measure frequency	An electronic counter measures frequency by totaling (or counting) the number of input cycles, or events, over a precise period of time. The results of this count are proportional to the unknown frequency and are computed to indicate the input frequency. A quartz-crystal oscillator inside the counter provides the time reference for the precise timing.
Measure period	As you remember, the inverse of frequency provides signal width information. In a digital system, the period measurement represents the average bit-to-bit time of an input signal.
Totalize	This measurement is like measuring frequency; but the operator controls the time over which the measurement takes place. This measurement is very important in digital systems to count the number of bits in a pulse train.
Measure ratio	With some counters, you can measure the ratio between two input frequencies. One application in which you can measure ratio is harmonically related signals.
Scaling	Some counters offer this special capability. A digital output signal is converted to a scaled or divided version of the input frequency.
Measure time interval	Time interval measurements are of major importance in many applications. Time interval is the measurement between two points, or the time between two points, of a common event, such as the time between two pulses.
Perform other measurements	Although rise and fall time measurements are normally a function of the oscilloscope, some electronic counters have this feature. Phase measurements are also possible. Some counters also have numerical keypads for mathematical manipulation of incoming frequencies. Electronic counters fall into four classes: frequency counters, universal counters, microwave counters, and reciprocal counters. You are more concerned with the electronic counter as a frequency counter.

Spectrum analyzer functions

While the spectrum analyzer has a number of uses, for a technician working with frequency generating circuits, its main function is to display frequency information in the frequency domain. The next sections will give you an overview of basic spectrum analyzer functions.

Display information in the frequency domain

A major difference between the oscilloscope and the spectrum analyzer is that the oscilloscope displays frequency information in the time domain, whereas the spectrum analyzer displays frequency

information in the frequency domain. The frequency domain is a graphical representation of signal amplitude as a function of frequency. Information is shown with respect to frequency along the X-axis of the spectrum analyzer. On the oscilloscope's time domain display, all frequency components of a signal are seen summed together. On the spectrum analyzer's frequency domain display, complex signals (i.e., signals composed of more than one frequency) are separated into their frequency components, and the power level of each frequency is displayed.

The spectrum analyzer was designed to display information in the frequency domain requires equipment that can discriminate between frequencies while still measuring each power level. This instrument graphically displays a voltage or power as a function of frequency across the X-axis of its CRT. In other words, frequency—not time—is the measuring unit of the CRT's X-axis. This is analyzing signals in the frequency domain.

Plot range of frequencies

Use spectrum analyzers to plot a complete range of frequencies within a desired spectrum directly on a CRT. The display on the screen is a plot of amplitude versus frequency. A spectrum analyzer does these things effectively:

- Magnify parts of the spectrum for detailed analysis with stable calibrated sweeps and resolution.
- Minimize display clutter for spurious responses within itself.
- Locate and identify signals over a wide frequency spectrum.
- Furnish wide dynamic range and flat frequency response.

Measure swept frequency and distortion

The swept frequency response of a filter or amplifier and the swept distortion measurement of a tuned oscillator are examples of swept frequency measurements possible with a spectrum analyzer. In addition, you can easily characterize frequency conversion devices with parameters from the display, such as conversion loss, isolation, and distortion.

Other functions

The frequency domain contains information not found in the time domain and, therefore, the spectrum analyzer has certain advantages not available with an oscilloscope. The spectrum analyzer is more sensitive to low-level distortion than an oscilloscope. Its sensitivity and wide dynamic range are useful for measuring low-level modulation. It can also be used to measure:

- FM.
- AM.
- Pulsed RF.
- Frequency drift during system warm-up.
- Long- and short-term frequency stability.
- Parameters such as subcarrier oscillator outputs and complex signals.

Field Fox spectrum analyzer

The Field Fox is essentially an upgraded, portable spectrum analyzer that is very useful in detecting interference in communications signals. The unit uses real-time spectrum analysis to overcome interference bursts and signals that may occur during a normal spectrum analyzer's background processing time (dead time).

The Field Fox analyzer was designed to assist in monitoring signals specifically in surveillance and secure communications, radar, electronic warfare, commercial wireless, and any signal from 5 kHz up to 50 GHz. The density display is very data-dense and dynamic, updating about 50 times per second and with adjustable persistence to fade the older data. It has 120,000 samples per second with

overlapping; each display update represents about 2,500 spectra of gap-free data capture. The result is that you can see subtle details such as signals inside other signals, and signals near the analyzer noise floor, even when such signals are small and infrequent.

Cable and antenna uses

The Field Fox can make accurate cable and antenna measurements. This process is sometimes referred to as line sweeping and results in the measurement of the signal attenuation and return loss as a function of frequency. Line sweeping may also be used to estimate the physical location of a fault or damage along the transmission line using the distance-to-fault measurement on the Field Fox. Testing the performance of transmission lines is not limited to only coaxial cable types but systems using waveguide and twisted pair cables may also be characterized once the appropriate adapter is installed between the transmission line and the coaxial interface on the analyzer. In addition, antenna measurements, in the form of signal reflection, or namely return loss and VSWR, may be used to verify the performance of an antenna at the installation site. When multiple antennas are required at an installation site, whether the antennas are associated with the same system or different systems, the antenna-to-antenna isolation may also be verified using a Field Fox.

Radar uses

When maintaining and troubleshooting radar systems and components in the field, it is often necessary to measure both the time and frequency domain performance over a variety of test conditions. While traditional methods for measuring time and frequency performance of radar systems included several different benchtop instruments, modern “all-in-one” or combination analyzers provide the most convenient and economical solution to field testing. Some high-performance Field Fox combination analyzers have multiple measurement modes including a peak power analyzer, vector network analyzer, spectrum analyzer and vector voltmeter.

Self-Test Questions

After you complete these questions, you may check your answers at the end of the unit.

034. Multimeters

1. What parameters can a multimeter measure?

2. What multimeter function shows a 31-segment bar graph, which indicates the absolute value of the input?

3. What range of input voltages can you measure when using the Fluke 8025A’s DC volts function?

4. What range of input voltages can you measure when using the Fluke 8025A’s AC volts function?

5. Explain what digital multimeter readings you should get when testing a good diode.

035. Oscilloscope basics

1. What signal information can you gather from an oscilloscope's graphic display on the CRT?

2. Name the three oscilloscope axes and what information they represent.

3. What oscilloscope axis produces the trace on the display screen?

4. What oscilloscope function controls how fast the trace is drawn across the screen?

5. What input coupling position lets you set a zero-volts reference level on the CRT screen without disturbing the input signal connection?

6. What is the sweep generator's most important function?

7. What type of oscilloscope probe should you use to keep resistive loading errors below one percent?

8. If the source voltage is totally unknown, what probe should you use?

036. Radio and audio frequency signal generators

1. What type of equipment permits complete RF and IF performance tests on virtually any type of HF, VHF, or UHF receiver?

2. List three applications for the RF generator.

3. What equipment produces stable AF signals used for testing audio equipment?

4. What are some of the most common waveforms produced by the function generator?

037. Measuring power

1. What is the power ratio the bel represents between two sounds?

2. What standard reference level was adopted in order to relate the *power* of a signal?

3. If a 10 W signal “A” is 3 dB *stronger* than signal “B”, what is the power of signal “B”?

4. What two types of power does the power meter measure?

5. What test equipment allows CW power measurements along with the ability to make precise peak power measurements at any point on a pulsed waveform?

6. What does a power sensor do?

7. What is the purpose of an RMS voltmeter?

8. When using a wattmeter, what two things are important to be aware of with the elements?

9. Explain dummy load construction and how it dissipates RF.

038. Measuring line levels, signals, and distortion

1. What test equipment tests the integrity and quality of 2-wire or 4-wire voice and data transmission lines by sending selected analog signals and measuring standard parameters of the received signals?

2. The AM–48 can be used in what three basic configurations?

3. Name the portable test set that uses radar principles to test copper core-cables and provides a visual display of cable faults.

4. Explain the basic principle of how an OTDR works.

5. What does a distortion analyzer measure?

6. What type of signal does the noise figure meter generate to drive a noise source?

7. What test equipment would you use to find a cable within a huge bundle?

039. Measuring frequency

1. What test equipment measures frequency by totaling (or counting) the number of input cycles, or events, over a precise period of time?

2. Why was the spectrum analyzer created?

3. Name six parameters a spectrum analyzer can measure.

4. Explain why the Field Fox was designed.

4–2. Analyzing Systems

As stated in the beginning of this unit, some systems have dedicated analyzing equipment and there may be test equipment that is used primarily for a certain Air Force system. This section will cover a few of these system analyzers as well as some supporting equipment used in RAWS maintenance.

040. Analyzing ground navigational equipment

Several types of ground receivers and vector voltmeters that measure and analyze ground navigational equipment. The Portable Instrument Landing System Receiver (PIR) simulates an aircraft receiver. While using the PIR, you will see the radiated signal through the eyes of a pilot landing an aircraft. As for the vector voltmeter, it is used for RF cable installation and troubleshooting. We will first discuss the PIR, then the vector voltmeter, and turn to a few specialized test sets. Lastly, we will cover the Monopulse Beacon Test Set.

Portable Instrument Landing System Receiver

The PIR measures and analyzes the signal characteristics of ILS, LOC, GS, Very High Frequency Omnidirectional and Radio Range (VOR) station, and marker beacon (MB) equipment. The PIR consists of the PIR electronics, LOC/GS antenna assemblies, a battery assembly, and a 12-volt DC power supply. A RF IN signal or AUDIO IN signal is received from the equipment under test and

analyzed. The measured signal characteristics are displayed on a liquid crystal display (LCD). The RF IN signal can be received two ways—cabled directly from the equipment under test or the radiated signal from the equipment under test that is received by the localizer or glide slope antenna assembly. The AUDIO IN signal is a detected audio signal and is cabled directly from the equipment under test. An AUDIO OUT signal is supplied for monitoring with headphones. The PIR electronics are powered by 7.2 VDC (nominal) from the internal battery assembly or the external 12-volt DC power supply from the PIR accessories kit.

Physical description

The PIR electronics are housed in an instrument case with a handle mounted on top so that you can easily transport it. The front cover is hinged and is easily removed so that you can access the front panel controls. With the front cover closed and latched, the front panel controls are protected from moisture, dust, or other contaminants. The antennas mount on the top of the instrument case. The PIR accessories kit consists of a carrying case, antennas, cables, adapters, monopod support, and power supply. The accessories are protected from moisture, dust, or other contaminants by the cover gasket.

Functional description

With the PIR, you can measure not only difference in depth of DDM and percent of modulation but also RF, AF, total harmonic distortion (THD), and perform spectrum analysis (SA). The signals received by the PIR are analyzed by software instead of analog circuits. All necessary calibration factors are contained in the firmware and factored into the measured data before being displayed on the display panel.

Display description

The left side of the display panel contains annunciators (LOC, GS, MB, and VOR) that illuminate to identify the selected mode of operation: the selected function, such as DDM, sum of depths of modulation, percent MOD, and so forth; and, if required, the frequency (FREQ) selected by the operator. The modes and functions will be explained further later in this lesson. The center of the display provides measurement information in two formats, digital and analog. The digital portion consists of five seven-segment digits with decimal points between segments. The analog section consists of 49 individual segments. These segments are software controlled and used to display DDM or RF field strength, when appropriate. DDM is indicated by moving a segment to the left or right of the center segment. The center segment indicates 0 DDM and every fifth segment to the left or right of center is highlighted to make it easier for you to read RF field strength variations. The right side of the display panel provides the measurement unit being used, keypad information, and a BAT annunciator to indicate a low battery condition.

Controls and displays

The following table displays common control and display information for the PIR. Refer to figure 4-16 for visual representation of the items described in the following table.

PIR Controls and Displays	
Control/Display	**Description**
ON/OFF	When pushed up to ON or down to OFF, turns power on on/off. After power is on, pushing up toggles the display backlight on and off.
DC IN	Connects 12 VDC power supply (part of PIR accessories kit) to charge the batteries.
BAT CHARGING	When lit, LED indicates battery is being charged.
RS–232	Connects a printer or a personal computer to the PIR. May be used to download data from the PIR memory.
<CLR>	Clears (resets) numeric entry; used to abort.

PIR Controls and Displays	
Control/Display	**Description**
<SET>	When pressed, this key allows users to enter data using number keys on keypad. <SET> key should be pressed again after all data has been entered.
<←/.>	When pressed, this key moves flashing function or mode left within a row, otherwise functions same as <↓> key, or selects decimal point.
<7>	When pressed, this key selects number 7.
<↓/0>	When pressed, this key moves the flashing function (or mode) down or right: used to select next lower frequency in channel function: selects next ↓.
<↑/8>	When pressed, this key moves the flashing function (or mode) up or left; used to select next higher frequency in channel function; selects next audio frequency; selects next audio frequency, or selects number 8.
<→/->	When pressed, this keypad key moves flashing function (or mode) right within a row, otherwise functions same as <↑> key, or selects minus sign.
<9>	Keypad key selects number 9.
<REL/6>	When pressed, this key allows relative signal level measurements (in RF level function, current input level becomes 0 dB and subsequent measurements are referenced to this point; when measuring DDM, current DDM becomes the reference point) or selects number 6.
<SPL/5>	When pressed this key allows special functions to be performed when a two- or three-digit code is entered or selects number 5.
<FREQ/3>	When pressed, this key selects audio frequency or selects number 3.
<FCN/2>	When pressed, this key allows the operator to change function of operation or selects number 2.
<4>	Selects number 4.
<MODE/1>	When pressed, this key selects either the mode of operation or number 1.
<MEM>	When pressed, this key allows stored data to be examined. Press <MEM> key again to exit.
<SAVE>	Pressing this key stores measured data in memory. Pressing this key twice allows the user to enter azimuth location when performing ground checks.
Liquid Crystal Display	Displays digital and analog measurement data.
Leveling Vial	Helps the operator to keep the PIR level and the antenna parallel with ground. This is necessary to obtain maximum signal strength.
RF GS IN/MB IN	Connects RF signal from glide slope, glide slope antenna, or marker beacon equipment to the PIR by cable.
RF LOC IN/VOR IN	Connects RF signal from the localizer, localize antenna, or VOR equipment to the PIR by cable.
AUDIO OUT	Connects headset to the PIR.
Audio IN	Connects audio signal from equipment under test to the PIR.

NOTE: A keypad key that permits two selections; e.g., <MODE> or <1> key, will automatically operate as an application key (MODE) or a number keypad key (1) depending upon the operation being performed. When frequency, time of day, timeout interval, or a special function number is required, the keypad key automatically operates as number key.

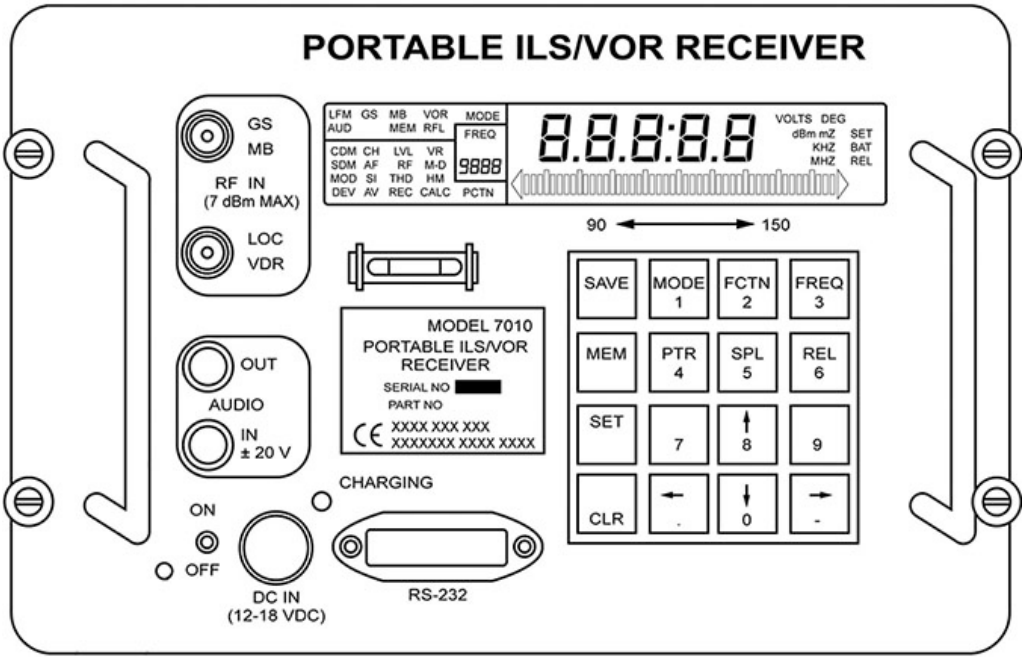

Figure 4–16. PIR front panel.

Vector voltmeter

The vector voltmeter (VVM) is used during an installation of an ILS facility or when antenna cabling is replaced. It can also be used to check out the operation of the localizer distribution unit if a problem is suspected. For alignment procedures, refer to TO 31R4–2GRN30–2, *Combined Maintenance Operations Instruction — Radio Transmitting Set (Localizer Station) — ANGRN-30(V)*. The HP Model 8405 Vector Voltmeter is capable of measuring amplitude and phase of two RF voltages of the same frequency. It also produces two 20 kHz replicas of these inputs at output jacks on the rear of the chassis. These outputs will have the same amplitude as the original inputs. The frequency range of the VVM is from 1 to 1,000 MHz and it will measure up to 360 electrical degrees of phase difference. The amplitude accuracy is typically 2 percent and the phase accuracy is within 3 degrees when using the supplied accessory kit.

Nine ranges are provided for amplitude (RMS) and power (dB) measurements for both “A” and “B” inputs. Phase measurements are made in reference to the “A” input and can be offset a total of 360 degrees (±180 degrees) in 10 degree increments. The sensitivity of the phase meter can be set to one of four ranges with the most accurate being ±6 degrees.

Care of the VVM

The two items of primary importance to remember when using the VVM are:

- Do not exceed the maximum input voltage rating.
- Handle the probes with care.

The maximum input voltage is 1.5 VRMS. This can be accomplished by using enough attenuation on the input probes during the test setup. When connecting the probes to an active circuit, ensure that the DC voltage is not more than 40V.

The probe tips are extremely fragile and can break easily. Replacement tips are usually available, but it takes time to replace them. When using the probes, do not force them into place. Always protect the tips by replacing them in the holder supplied when not in use. Never allow the probes to drop on the floor or hit against another object.

Front panel controls

Now that we covered the purpose and care of the VVM, we can discuss the controls on the front panel.

VVM Front Panel Input, Tuning, and Voltmeter Controls		
Function	**Control**	**Description**
Input and Tuning	PROBE A	Input to Channel A. Requires a minimum of 300 µV for signals over 10 MHz. The voltmeter and phasemeter tune to Probe A's input frequency.
	PROBE B	Input to Channel B. Requires a minimum of 100 µV. A signal at Probe A is required for phase measurement and for Channel B amplitude measurement.
	LINE	Press to turn on 8405A; lamplights. Push-button retainer unscrews for replacement. If no indication of power is present, check the fuses on the rear of the chassis.
	FREQ RANGE - MHz	Coarse tuning control used to put input signals within capture range of automatic fine tuning. Selected range must include fundamental frequency of signal applied to Probe A. Adjust until automatic phase control (APC) lamp goes out.
	APC UNLOCKED	Lamplights to indicate 8405A not tuned. This indicates that the APC circuit is searching, amplitude is too low, and/or FREQ RANGE - MHz selector is not set to the range that includes the fundamental frequency of Probe "A" input. Ignore momentary blinking.
Voltmeter	AMPLITUDE (VOLT) METER	Reads amplitude of fundamental component of signal applied to Probe A or Probe B. The two top scales display in RMS voltage. The bottom scale reads power in dB, referenced to 1 mW into 600 Ω.
	AMPLITUDE CHANNEL	Selects channel to be measured on voltmeter. Has no effect on phase readings.
	AMPLITUDE RANGE	Used to set AMPLITUDE meter scale. Select the RMS voltage ranges from .1 to 1000 µV, and power ranges from –70 to +10 dB. To read the power level, first find the range, which gives an on-scale reading. Then add reading on the meter to that of the RANGE selector switch. This needs to be done because the range switch is calibrated to the 0 dB point on the meter.

VVM Front Panel Input, Tuning, and Voltmeter Controls		
Function	**Control**	**Description**
Phase Meter	PHASE METER	Reads phase angle between the fundamental components of signals applied to probes. The reading is always referenced to the A channel and reads the B channel difference. At the left and right of the meter scale, direction is indicated by “B LAGS” AND “B LEADS.” This can give a maximum range of 360 degrees by –180 degrees to +180 degrees of the actual phase angle.
	PHASE RANGE	Sets the sensitivity of the phase meter scale to one of four ranges: ±6 degrees, ±18 degrees, ±60 degrees, and ±180 degrees Red ZERO control has at least ±10 degree range.
	PHASE FINDER	Overrides PHASE RANGE and PHASE METER OFFSET to select the ±180-degree phase range and zero offset. Used to find phase angle without changing settings of controls.
	PHASE METER OFFSET	Used to reduce input phase angle and allow use of expanded PHASE RANGE scales. *Not usable unless a definite input angle exists.* Used to offset the phase meter to zero (or as close as possible) so the RANGE sensitivity can be increased for more accurate readings.

Phase measurements

The phase meter and its associated controls are used to make phase measurements. It has already been established that the phase indicated on the meter represents the relative phase of the B channel with respect to the A channel. As the meter indicates, B can either lead or lag by a certain amount. For an example, if the meter shows B channel lagging by 90 degrees, then the electrical length of the cable being tested (or signal) is 90 electrical degrees longer than the A side.

The first thing to do is to ensure that the input and tuning is set up correctly. Figure 4–17 illustrates a setup procedure using the VVM accessory kit. Next, the meter should be zeroed. This is accomplished by setting the red knob atop the RANGE switch until the meter is centered. Finally, the cable to be measured is placed in line with the B side between the power splitter and the probe tee.

Use the phase controls to offset the meter as close to zero as possible, but right of zero. Increase the sensitivity using the RANGE switch so you can read the ±6-degree scale. (BE CAREFUL NOT TO DISTURB THE RED ZERO CONTROL). Add the meter offset to the actual meter reading to obtain the correct phase reading.

CAUTION: Do *not* burn out probes. Maximum input: ±40 VDC or 2 volts peak (4 volts peak-to-peak). Potential changes between test points should not exceed 50 VDC to avoid transient pulses. Transient pulses greater than 50V will burn out the probe. For this reason, a blocking capacitor cannot be used in series with the probe to measure AC in circuit with a DC potential of greater than 50V.

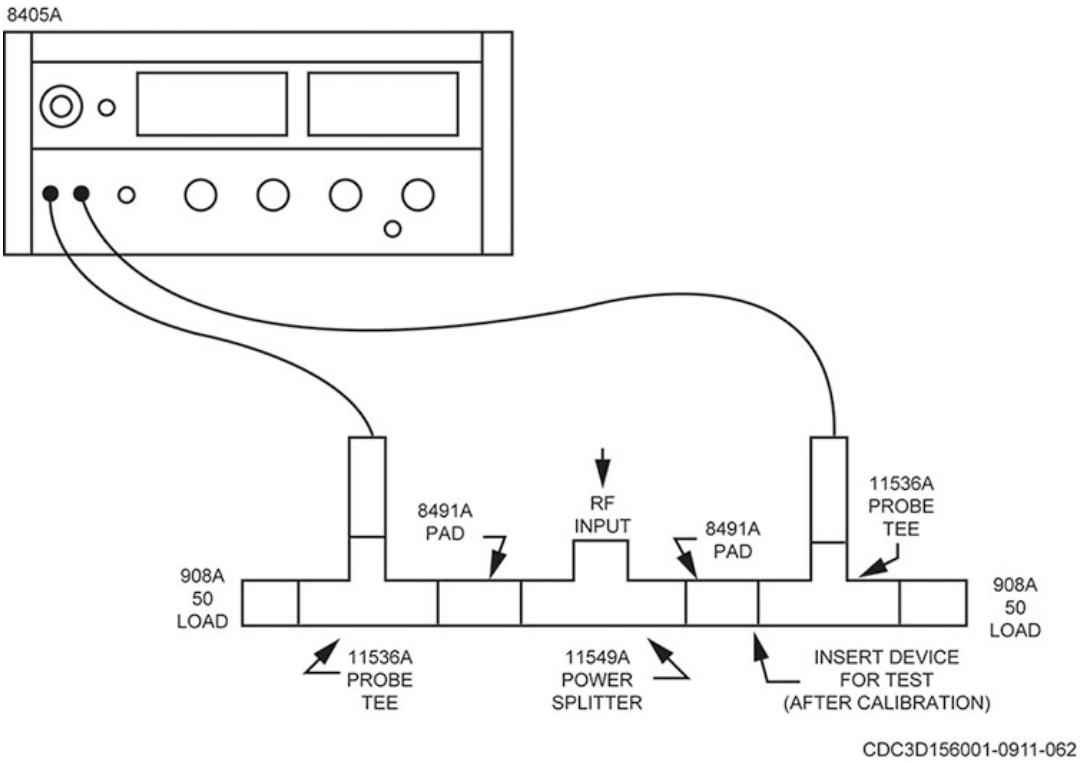

Figure 4–17. Vector voltmeter.

AN/TPM–32 Video Signal Processor test set

The AN/TPM–32 Video Signal Processor test set provides bench testing and online monitoring of the Video Signal Processor CP-1045/T of the AN/TPX–42A Interrogator Set. The test set contains a power supply and eight basic types of printed circuit boards for a total of 38 boards. The test set is mounted in a combination case, which permits its use as a portable instrument. The test set is used in either a test mode or a normal online mode of operation.

In the test mode, the video signal processor provides a series of test messages; data bits, control and miscellaneous signals to permit the test set to monitor and display the functioning of specific circuits within the video signal processor. The specific circuits are: memory target detection unit, replay detection unit, azimuth increment, and transfer buffers circuits.

In the normal online mode, the test set functions the same as in the test mode except the video signal processor supplies the test set with real target information instead of test messages. TO 33D7-24-13-2, *Service Instructions — Video Signal Processor Test Set, Type ANTPM-32,* has more in-depth information.

AN/UPM–145 radar test set

The AN/UPM–145 radar test set is used to perform tests and alignments on the Precision Approach Radar (PAR). This test set allows you to test parameters such as radar power, frequency, pulse repetition frequency (PRF), range tracking capabilities, receiver bandwidth, and minimum discernible signal. You can also use the test set as a signal generator with CW, pulse modulated, square wave, or FM outputs. These signals are controllable in frequency, power, PRF, pulse width, range, and range rate. Figure 4–18 shows the front panel of the radar test set.

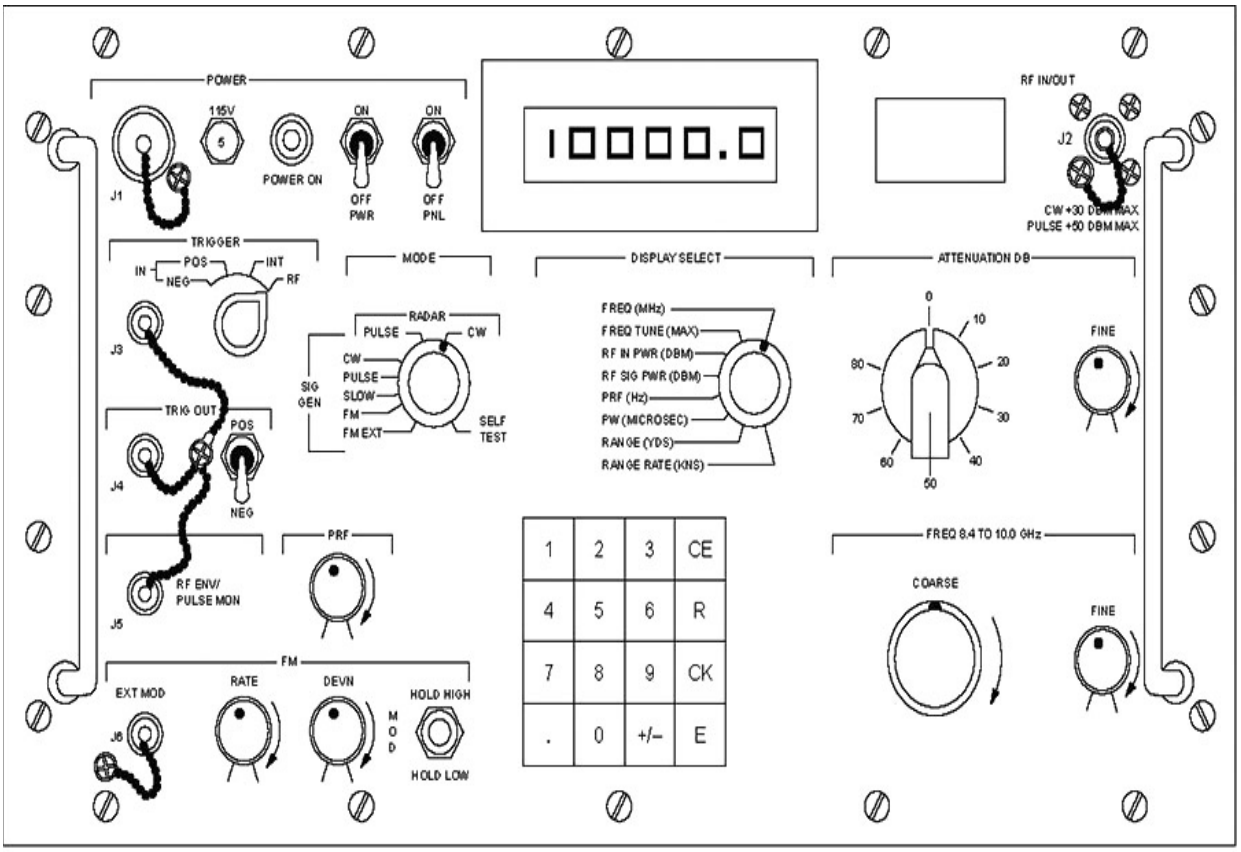

Figure 4–18. AN/UPM–145.

We will cover only those features you are most likely to use, excluding the more obvious such as power ON/OFF. The following table will give you a better understanding of the AN/UPM–145 radar test set functions and operation.

AN/UPM–145 Sections	
Function	**Operation**
RF IN/OUT	RF IN/OUT connector J2 is located in the upper right hand corner of the AN/UPM–145. The max input of the AN/UPM–145 is +50 dBm for pulsed radar systems. When connecting a radar with a max power of over 50 dBm, use attenuators to reduce the overall input power to at least 50 dBm or less.
Trigger	Unless you are in the signal generator mode, you should leave the trigger switch in the RF position. The other positions allow selection of test set triggering, by either the positive or the negative edge of input triggers, or internal triggering by the PRF generator.
RF ENV/PULSE MON	RF ENV/PULSE MON provides for monitoring envelope of RF input applied to RF IN/OUT connector J2.
PRF (R2)	This potentiometer provides for continuous control of internal test set trigger pulse repetition rate from 50 to 5,500 PPS. A single control provides fine and coarse PRF adjustments. Adjustment of the fine control potentiometer is between detents of approximately 20-degree rotation in the reverse direction from the last coarse/fine adjustment.

AN/UPM–145 Sections	
Function	**Operation**
FM	This functional group provides for frequency modulation of the test set output. The parts and associated descriptions of the frequency modulator: EXT MOD J6: This connector provides for application of external frequency modulation to the test set. RATE (R3): This potentiometer adjusts the test set generated FM rate from 0 to 6 MHz per microsecond. DEVN (R4): This potentiometer adjusts internal peak deviation from 0 to +100 MHz of the test set carrier frequency. Used when HOLD HIGH-MOD-HOLD LOW switch is held in HOLD HIGH position. HOLD HIGH-MOD-HOLD LOW (S7): Three-position spring loaded switch that returns to center position when released.
Mode Switch	This eight-position switch provides for selection of the test set mode of operation, and can select between three different modes of operation (radar, signal generation, or self-test mode).
Display Select	The display select provides for selection of a parameter for viewing.
Keyboard	The 16-key keyboard allows you to enter the pulse width, range, and range rate, when the MODE switch is set to RADAR PULSE or SIG GEN PULSE modes and the DISPLAY SELECT is in the appropriate position.
Numeric Display	The numeric display is a six-digit numeric display that provides for direct display of the value for the parameter selected by DISPLAY SELECT switch.
Attenuation dB	The ATTENUATION dB heading identifies a functional group, and included in the attenuation group is a nine-position rotary switch that provides attenuation of the RF IN/OUT signal from 0 to 80 dB. There is also a potentiometer identified as FINE, which provides continuous attenuation adjustment of the test set RF output signal level from +7 to –15 dB.

Monopulse Beacon Test Set

The Monopulse Beacon Test Set (MBTS) II system gives you the capabilities to test the operation of the Monopulse Secondary Surveillance Radar (MSSR). This system is similar to the AN/UPM–155 test set used with previous identification, friend or foe/selective identification feature (IFF/SIF) systems we have covered but tailored specifically for digital systems such as the MSSR. One example of an adjustment you may complete with the MBTS is the MSSR receiver sensitivity.

The MBTS II includes the basic MBTS paired with a Windows-based laptop called the operator control system. The MBTS consists of a 7 by 19 inch chassis with eight plug-in modules—three up convertor modules, one reference source module, one interrogation demodulation receiver module, one built-in test (BIT) module, one process control and communications (PCC) module, and a reply generator module.

The PCC module controls all functions within the MBTS. It contains circuits that process received interrogation and azimuth data in real time. It processes all user GPIB or serial commands, and it monitors the status of all RF processes.

The reply generator module generates and sets the primary characteristics of the Sum, Difference, and Omni RF signals. It contains the circuits that set the target signal level, the Sum/Omni ratio, the Delta/Sum ratio, and the Delta/Sum phase. Signals from the PCC module control each of these functions.

Each up-converter module translates one of the three 70 MHz signals from the reply generator to 1090 MHz. Channel A, Channel B, or BIT output signals are available from each up converter. Each up converter also has three front panel test ports—one at 70 MHz and two at 1090 MHz.

The reference source module generates low noise 16 MHz reference signals and three phase equivalent 1020 MHz local oscillator (LO) signals. Phased locked loop circuits within the other modules use the 16 MHz signals as a reference. The LO signals, at +13 dBm, are routed to each of the three up converter modules to convert the 70 MHz IF signals to 1090 MHz.

The interrogation demodulation receiver module receives and demodulates interrogation signals from the radar system. RF signals may be selected from either of the sum channel inputs (duplexed with the reply signals) or from either of the two dedicated rear panel interrogation inputs. Demodulated data, pulse amplitude modulation and differential phase-shift keying route to the PCC module and to the front panel test ports.

The BIT module includes circuits to test the reply generation and interrogation demodulation processes. It also measures the status of other system parameters such as power supply voltage and operating temperature. Basically, the BIT checks the test set performance.

041. System analyzers

As previously stated, your location and mission often determine the test equipment that you may have in the work center. All-in-one system analyzers are great to have because they can perform the job of several pieces of test equipment in a smaller footprint. A few of the most popular are the network/protocol and communications system analyzers, described below.

Network/protocol analyzer

Network test equipment provides a means of checking and controlling the operational characteristics of equipment that is on a local area network (LAN), metropolitan area network (MAN), or wide area network (WAN). We will discuss the general concepts of a protocol/network analyzer. Your equipment's operating characteristics may differ somewhat from those presented here.

Operational characteristics of a protocol analyzer

A protocol analyzer provides a capability for digital network diagnostics and for developing communications software. These analyzers have increased in importance for systems control use over the years and will continue to do so. A protocol analyzer generates, monitors, and captures data traffic moving across a network connection. Received data is deciphered according to the rules of the network protocol and the results are displayed.

General description

The protocol analyzer may be a specialized laptop computer, small handheld unit or software application operated on a common personal computer. In most cases, a portable unit can be transported to the physical location of individual network connections. The Agilent Technologies Advisor, Network Associates Sniffer, Fireberd 6000, and Network Communications Network Probe are a few of the protocol analyzers that are used in system control facilities and network control centers. These analyzers count total frames, collisions, error frames, broadcasts, and other statistical data. The data may be displayed in a numerical, graph, or speedometer gauge format. Disk storage provides the capability for the data to be captured and saved for later viewing. We will discuss the features of the Agilent Technologies Advisor and other Microsoft Windows based protocol analyzers.

Theory of operation

Network devices are connected to a LAN via an internal network interface card (NIC). As data moves across the network, the NIC only processes broadcast frames and frames with its media access control address. However, the NIC in a protocol analyzer is configured to process all frames. In serial circuits, the selection of frames for processing is not a concern. All frames that enter a serial interface are processed. The frames are then sent to the other components of the protocol analyzer for further processing. These components are as follows:

1. Counter—this component counts bytes, frames, and errors as they are processed by the NIC.
2. Filter—the filter discards frames based on the filter definition or activates a trigger based on the trigger definition.
3. Buffer—this component stores all frames based on the user configuration inputs.
4. Protocol analyzer central processing unit—this specialized processor processes the frames based on the selected test and the user configuration inputs.
5. Personal computer central processing unit—this processor provides the Microsoft Windows operating system capabilities, user interface and display information based on the user inputs.

The protocol analyzer stores the received frames in a buffer in random-access memory (RAM). The frames are processed according to the protocol rules that are identified by the data-type field of the frame. For example, AppleTalk frames are processed using the protocol rules of AppleTalk and High-level Data Link Control frames are processed using the protocol rules of High-level Data Link Control.

The operator may configure the protocol analyzer to display the captured frames in a specified manner using a filter. After the operator defines the filter, unwanted information is suppressed and only the desired data is displayed. Filtered information remains in the buffer and can be retrieved later if needed. For ease of use, the hexadecimal data fields may be converted to ASCII text, which is easier to read. Since network addresses identify the network nodes, the operator may convert them to the commonly used node names. It is easier to identify the e-mail server by its name than by its Internet protocol (IP) address.

Communications system analyzer

One of the most versatile pieces of test equipment used today is the communication analyzer. It is a multi-function instrument designed to meet the challenges of most radio maintenance problems. A communication analyzer can be used to maintain frequency-hopping radios. It can also be used to verify radio performance characteristics and to diagnose failures or to troubleshoot communications systems. This section covers functions of a communication analyzer, sometimes called a communications service monitor (CSM). Since each communication analyzer is tailored to its own unique models, we will use the Aeroflex Communication Service Monitor TS–4317, see figure 4–19, as our example.

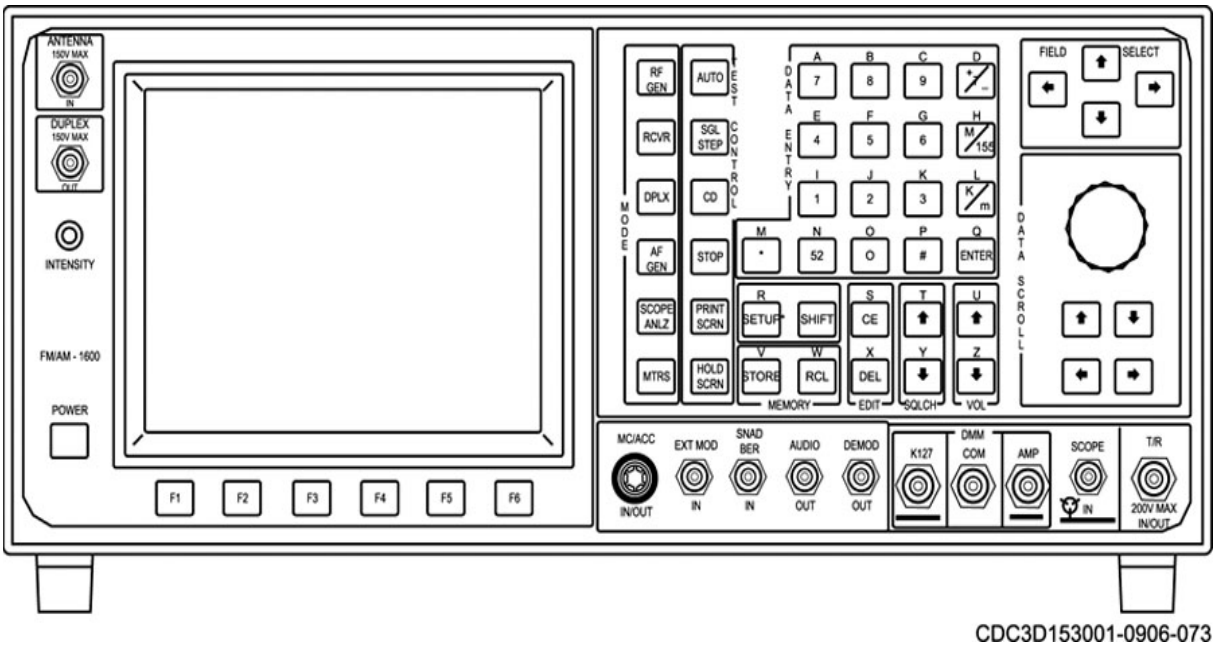

CDC3D153001-0906-073

Figure 4–19. Communication Service Monitor TS–4317.

Characteristics of the communication service monitor

The CSM performs a broad range of testing activities. With this instrument, you have the capabilities of 16 different pieces of test equipment in one convenient package. With the CSM, you no longer have to carry multiple pieces of test equipment to maintain, install, or troubleshoot your radio equipment. The CSM can be used in the field or work center. This section will briefly describe the equipment and its capabilities.

Equipment description

The CSM is a microprocessor controlled, digitally synthesized test set which combines the operations of many different test instruments into a single, compact unit. The CSM uses an alphanumeric keypad, dedicated function keys, multi-task soft function keys and a high-resolution color display, to enter and edit functions and data. Testing with the CSM can be done by remote control or manually by front panel control. Tests performed with the CSM can use pre-programmed setups or formats determined at the time of the test. Microprocessor controlled memory allows storage and recall of parameters for each of the testing modes as well as storage and recall of oscilloscope and spectrum analyzer traces for signal comparison.

Meter

The CSM provides meters for use as independent test functions as well as synthesizing them into the major mode functions. As independent functions, the meters provide a bar graph display and digital data. On the major operations screens, these meters display as bar graph display and digital data or just as digital data, depending on the oscilloscope/spectrum analyzer display size. The meters can be used to monitor both internal and external inputs.

Data entry and display

Unless the CSM is configured for remote testing, all data received by the operator is in the form of screens and menus. Each major test operation has a dedicated operation screen with subordinate setup menus. The microprocessor edits operation screens to reflect changes in parameters imposed by the operator or reflects changes in data delivered by the unit under test.

Individual meters also have dedicated operation screens and subordinate setup menus. The meter operation screens can be accessed through the mode operation screen that is being supported by that specific meter operation or through the meter menu.

Once a specific mode of operation is selected, the operation screen appears on the LCD or CRT. The parameters shown reflect the parameters last entered in that operation. This specific operation screen is accessed with one of six dedicated MODE keys.

Setup menus on all mode operation screens are accessed from the specific operation screen by pressing the SET UP key. Operator entry and edit of data is performed on the operation screen or on the setup menu.

The operation screen and menus have active cursors that the operator can use to access a specific parameter. Once the parameter is accessed, data can be selected with DATA SCROLL spinner or DATA SCROLL keys or by using the alphanumeric DATA ENTRY keypad.

Multi-task "soft" function keys are also provided to perform set up, edit and entry. Each operation screen defines soft function keys to fit the specific needs for that operation. These definitions are displayed on the screen above the defined key. Each operation screen may have several definitions for each soft function key or make a definition unavailable depending on the parameters of the operation. Various functions performed by these multi-task keys include toggling between two values, selecting connectors for access, entering data or selecting a field for edit.

Setup storage and recall functions are available for each of the MODE screens. This allows the user to store up to nine setups in each MODE screen for future recall. Selecting the auxiliary (AUX) function menu and selecting the store function may also save the system configuration. This allows the user to store and recall up to nine system configurations.

The receiver and generator have a frequency list capability. This allows the user to store up to 100 frequencies into a list for use when performing tasks that require the same instrument setup to be used on many different frequencies.

Functions

The CSM is a general purpose communication test set for testing radios and related equipment. As stated before, the CSM combines the operations of 16 different test instruments into a single, compact unit. The CSM is capable of performing the 20 functions listed in the following table.

CSM Functions	
Receiver	Spectrum analyzer
AF meter	Tracking generator
Phase meter	Bit error rate meter
Oscilloscope	Cable fault detector
RF generator	Signal strength meter
AF generator	Frequency error meter
Distortion meter	Deviation (peak) meter
RF power meter	Deviation (RMS) meter
Modulation meter	Analog/digital radio paging
Digital multimeter	Signal plus noise and distortion meter

042. Other support equipment

Although there are many other pieces of support equipment, we will focus on two that you may see at your location. The breakout box described here is a commercial model used for testing signals. There are also many "locally made" breakout and testing boxes throughout the Air Force constructed by

workcenter personnel in order to provide certain aspects of testing that are usually location or equipment dependent.

The earth ground tester is an essential piece of equipment that helps ensure your ground system is working as it should. This helps your equipment to function properly as well as proving safety for personnel.

Breakout box

The breakout box most commonly found in the field is a portable, pocket-sized test set (fig. 4–20). This set's design allows you to monitor and access multiple conductors; including the conductors of Electronic Industries Alliance (EIA), RS–232, and International Telecommunication Union (ITU) V.24 interfaces. Breakout boxes are capable of monitoring all the conductors of EIA RS–530, EIA RS–449 and ITU V.35 interfaces are available as well. Some test equipment, such as protocol analyzers, may include an interface monitor or breakout panel that provides the same functions as the breakout box.

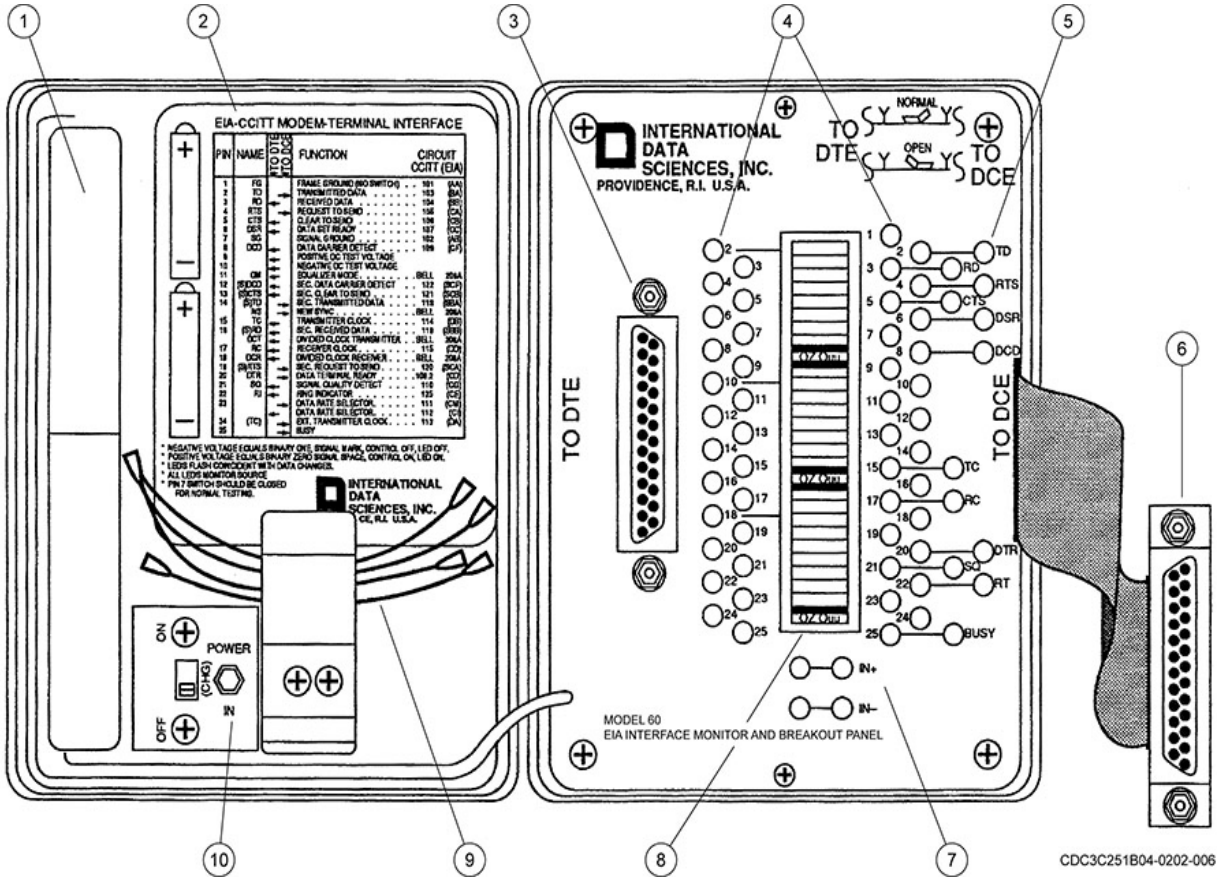

Figure 4–20. Model BB60 breakout box.

General description

This general description of the breakout box refers to the line drawing of the Model BB60 shown in figure 4–20. Housed in a durable polypropylene injected molded case, the BB60 breakout box has LEDs to monitor key signals and toggle switches to interrupt each line for cross-patching. Refer to figure 4–20 as we look at each of the parts in turn. Callouts are the circled numbers in the figure.

1. Batteries, callout 1. Two size AA batteries provide a self-contained power source, capable of over 100 hours of continuous use. Two Ni-Cad batteries provide a rechargeable option when installed.

2. Model 60 interface decal, callout 2. This decal, mounted inside the cover, lists the pin number, common mnemonic name, direction, function, and standard circuit designation for all signals of the EIA/ITU interface.
3. TO DTE, callout 3. A 25-pin female EIA connector connects the Model 60 to the DTE.
4. Test points, callout 4. Test points on each side of each switch allow monitoring and cross-patching of all interface signals.
5. LED indicators, callout 5. Twelve LEDs monitor key interface signals.
6. TO DCE, callout 6. A 25-pin male EIA connector, attached to a 7-inch ribbon cable, directly connects the Model 60 to the data communications equipment (DCE).
7. IN + and IN – circuits, callout 7. The IN + and IN – circuits measure input signals to determine whether they meet EIA specifications.
8. Miniature switches, callout 8. Twenty-four miniature ON/OFF switches allow all interface conductors (except frame ground on pin 1) to be individually interrupted for isolated testing and observation.
9. Jumper cables, callout 9. Miniature jumper cables, stored inside the cover, are for cross-patching signal lines.
10. Rechargeable unit (option), callout 10. The rechargeable unit lets the unit operate with rechargeable Ni-Cad batteries or from a 115 VAC, 60 Hz or 230 VAC, 50 Hz power line.

Operation

When using the breakout box, the operator unplugs the EIA RS–232 interface cable at the modem and plugs it into the Model 60's 25-pin female connector labeled "TO DTE." The Model 60's male connector, labeled "TO DCE" and attached to a 7-inch ribbon cable, connects directly to the modem. This allows access to all signal conductors of the 25-wire EIA–232 interface.

The unit monitors 12-key interface signals with EIA RS–232 sensing circuits that drive 12 LEDs to indicate the ON or OFF levels. Two additional LEDs labeled "IN +" and "IN –" sense positive or negative voltage levels between ±3 and ±25 V, and they may be used to monitor any signal line. All the sensing circuits are high impedance and will not load lines.

Twenty-four miniature switches on the breakout box allow all interface conductors (except frame ground on pin 1) to be individually interrupted for isolated testing and observation of terminal and modem lines. The side switch pins on each side and small jumper cables stored in the cover, allow cross-patching and monitoring of interface signals. Therefore, you can reroute signals to pins by opening lines using the miniature switches and cross-patching using the jumpers.

Conveniently mounted inside the front cover of each unit is the chart in figure 4–20, callout 2. The chart gives the pin number, common mnemonic name, direction, function, and standard circuit designation for each of the 25 signals in the EIA/ITU interface.

The unit provides a means to isolate and solve modem-terminal problems at the EIA RS–232 and ITU V.24 interface. It can also be very useful for digital lab work. A rack-mounting panel lets you mount the unit in a standard 19-inch cabinet or rack.

Earth ground tester

You should already be aware that system grounds are vital for proper system operation and personnel safety. In most locations, the site ground is achieved by driving conductive posts, such as copper rods, literally into the soil or ground. It is important to make sure that your ground rod is effective and will conduct stray voltages to the ground, and not to you. This is verified with an earth ground tester.

Earth ground testing

Earth ground testers generate a significant amount of current, so be careful when you perform these tests. Use the procedure described here or the procedure recommended by the manufacturer for the

particular test equipment in your shop. Figure 4–21 illustrates probe locations for ground resistance tests. Where possible, conduct this test at the corner of the building opposite the electrical service entrance.

CAUTION: Underground metallic pipes may influence readings.

Position probes as far as possible from the grounding system under test. You may temporarily disconnect electrical service from other ground connections; however, make sure you reconnect the ground because someone could be shocked. Connect the appropriate lead of a ground tester to the ground rod at the test site. Place the potential reference probe at a distance greater than one-half the diagonal of the building under test, but not less than 25 feet (ft.). Place the current reference probe 90 degrees from the potential reference probe (in a direction away from the facility under test) and the ground rod under test, and at a distance greater than one half of the building diagonal, but not less than 25 ft. from the potential reference probe. Note that the distances between probes are equal.

After connecting all three of the probes, read the ground test result according to manufacturer's directions; normally you push a button and read a meter. For buildings without a ground loop conductor, perform this test at each ground rod. Periodic tests should be made at approximately the same time each year to minimize confusion caused by seasonal changes.

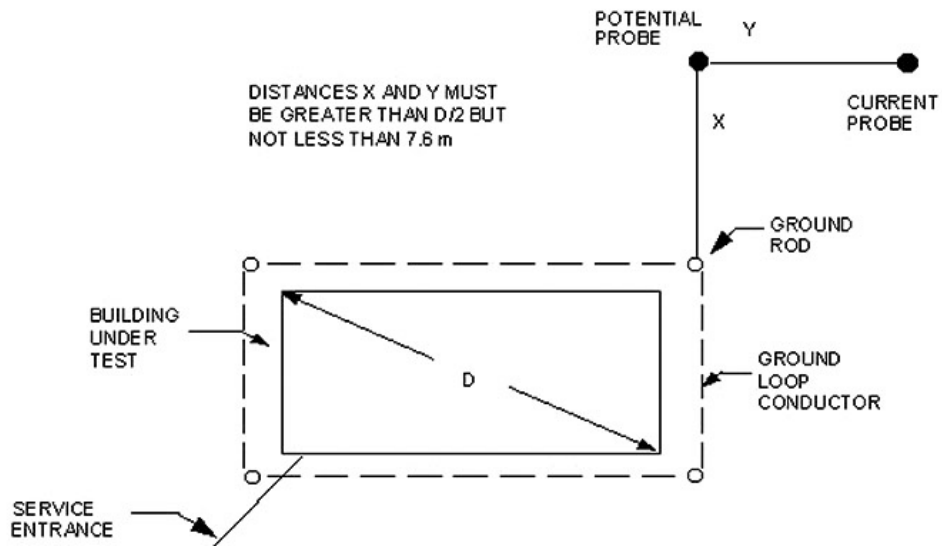

Figure 4–21. Earth ground test probe locations.

Earth ground standards

National Electrical Code calls for 25 Ω or less to earth ground, but communication facilities such as radars require 10 Ω or less. As we said above, this is normally done with copper rods, at least 8 ft. long. Permanent facilities may have more elaborate grounding systems, but in deployed or temporary locations, ground rods are the standard. If you perform the test and read more than 10 Ω, you may have to lower the resistance. There are many ways to do this, such as installing a deeper ground rod, installing parallel ground rods, or pouring an electrolytic salt solution into the soil.

Self-Test Questions

After you complete these questions, you may check your answers at the end of the unit.

040. Analyzing ground navigational equipment

1. What navigational systems do you use the PIR for?

2. What type of signals can you measure on the PIR?

3. What does the vector voltmeter measure?

4. State the two main precautions when using the vector voltmeter.

5. What is the main purpose of the AN/TPM–32 Video Signal Processor test set?

6. What PAR parameters can you test with the AN/UPM–145 radar test set?

7. What system is the MBTS primarily used for?

041. System analyzers

1. State the purpose of a network/protocol analyzer.

2. What analyzer provides the capabilities of 16 different pieces of test equipment in one convenient package?

3. How many functions is the CSM capable of performing?

042. Other support equipment

1. What is the main purpose of the breakout box?

2. What test equipment would you use to verify if a ground rod is effective and conduct stray voltages to the ground?

3. Communications facilities require what reading on their system grounds?

4–3. Airfield Operations Support

This section will cover how your everyday duties impact the area or location from which aircraft flight operations take place. These areas, called aerodromes, include small general aviation airfields, large commercial airports, and military airbases. In order to provide accurate service for aircraft in the aerodrome, the supporting equipment must be sited properly and have adequate backup electrical power systems for emergency operation. The topics below will describe each of these important airfield categories.

043. Importance of Radar, Airfield & Weather Systems in the aerodrome

RAWS is an important part of the Air Force mission. How do you support the mission? It is not just assisting pilots landing in inclement weather, in the hours of darkness, or flying from point "A" to point "B" using navigation systems. You support the mission by assisting the United States of America, the president of the United States, and the superiors appointed over you in delivering food, medicine, military personnel, war materials, and so forth. You play an intricate part in the everyday mission of the Air Force during war, peacetime conditions, and natural disasters by ensuring pilots complete their mission and deliver the "precious cargo" safely.

Now that you have the "big picture" of how you support the overall scope of the Air Force mission, we can take a look at the relationship of safety of flight and mission effectiveness within the aerodrome.

Aerodrome

RAWS technicians are not the only personnel supporting the airfield. If you are assigned to an operations squadron, you will work beside air traffic control, airfield operations, base operations, weather operations, civil engineering, base safety, security forces, and other personnel. All of these groups work in tandem to ensure the overall safety of the airfield.

Navigation, radio, and weather systems are a huge part of the aerodrome. These systems are strategically placed on the airfield in order to either maximize system effectiveness or, in some cases, for convenience. In order to uphold our obligation for the aerodrome, we need to ensure that our systems are maintained to the highest standards. By making sure all pilots and airfield personnel can communicate appropriately and our navigation systems provide accurate readings, we contribute to the safety of flight. Along with air safety, we need to think ground safety when driving on the airfield. The next few sections will cover these topics.

Safety of flight

What about safety of flight? You will have an in-depth discussion about navigational systems flight check inspections in volume 2. These inspections are conducted by the Federal Aviation Administration (FAA) personnel with assistance from RAWS personnel. The FAA, part of the Department of Transportation, is tasked with periodically inspecting the safety of an airfield's navigational equipment to determine if the equipment is safe or unusable. Remember, someone's life or cargo on an aircraft is in your hands so make sure your equipment is properly sited and operating within established parameters. You must also know how to maintain, manage, document, and up-channel pertinent information about your equipment systems in a timely and accurate manner. These processes will also be covered more in the next volume.

Coordination between civilian and military authorities is essential. Most military bases and locations have civilian aircraft transiting through their airspace. This is not only applicable in the United States but also in other countries. Although this coordination of civilian and military collaboration is way above your level of management, it is important to interact with civilian and host nation personnel in a constructive manner in order to maintain safety of flight for all parties involved.

Airfield driving

Personnel required to drive on the airfield must be knowledgeable of, and comply with, the procedures outlined in Air Force Instruction (AFI) 13−213, *Airfield Driving*, and locally developed airfield driving instructions (ADI). For the purpose of this discussion, the ADI is a wing or base level instruction.

Overview

In today's complex airfield environment, there are incidents involving aircraft, pedestrians, and ground vehicles at airfields that lead to property damage and personnel injury. One of the most hazardous incidents for an airfield driver to be involved with is a runway incursion. A runway incursion occurs when an aircraft, vehicle, or person enters the protected area of a surface designated for the landing and take-off of aircraft without approval from ATCT. Runway incursions have the potential to result in aircraft endangerment and loss of life. While there are several factors involved in a runway incursion, the leading causes of these incidents result from a failure to follow procedures, inadequate vehicle operator training, and loss of situational awareness. Therefore, strict adherence is essential to preventing aircraft-vehicle mishaps and personnel injury on the airfield.

Requirements

All flightline and airfield drivers must complete driver training and testing requirements. At a minimum, drivers will be tested on the airfield diagram/layout, complete a communications test, a general knowledge test, and a practical driving test. The following table describes what will be covered in each test.

Airfield Driving Tests	
Test Type	**Information Covered**
Diagram/Layout	Ensures individuals know the location of runways, taxiways, aprons, airfield access points, etc. It will also include identifying the location and description of visual flight rules and instrument holding position signs and markings.
Communications	Include basic communications principles, the phonetic alphabet, standard aviation phraseology, escort phraseology and rules, and a simulation of radio communications between the vehicle operator and ATCT.
General Knowledge	Covers general airfield characteristics. Elements unique to the airfield will also be covered.
Practical Driving	Driving an authorized vehicle while demonstrating the ability to operate in all areas required for work, identify runway hold lines, runways, and controlled movement areas. Properly contact ATCT prior to entering runways or controlled movement areas.

Light gun

You may see a variety of light guns during your career as a RAWS technician. Light guns are used to signal aircraft, vehicles, and personnel on or near the airfield to ensure they can safely perform their duties in the event of a radio failure. This information will be part of your site specific flightline drivers' training. This training should cover the meaning of the different signals you need to know to effectively follow control tower directions. You will see the light guns in both fixed air traffic control towers and mobile environments. Air traffic controllers are the primary users of the light gun. The light gun concentrates an intense colored beam of light and projects it at the object, which it is pointed towards. A trigger handle enables the beam to flash and the color of the beam depends on the colored lens selection. The table below describes the meaning of the different signals.

Light Gun Signals			
Signal	**Aircraft in flight**	**Aircraft on the ground**	**Ground vehicles or personnel**
Flashing white	N/A	Return to starting point	Return to starting point
Steady green	Cleared to land	Cleared for takeoff	Cleared to cross/proceed
Flashing green	Cleared to approach airport, or return to land	Cleared to taxi	N/A
Steady red	Continue circling, give way to other aircraft	Stop	Stop
Flashing red	Airport unsafe, do not land	Immediately taxi clear of runway in use	Clear the taxiway/runway
Alternating red and green	Exercise extreme caution	Exercise extreme caution	Exercise extreme caution
Blinking runway lights	Vehicles, planes, and pedestrians immediately clear landing area in use		

As a technician, you may or may not perform maintenance on this equipment. If required, review the technical order or commercial manual for the specific model light guns you are responsible for maintaining. In many cases, your technical responsibility ends with assisting the controllers in purchasing replacement instruments should they fail.

044. Equipment siting criteria

Each Air Force base, air route, or air base complex has its own peculiarities that dictate the location of RAWS equipment. There are many factors to consider, such as the operational use of the facility in relation to the area and local air traffic control patterns, terrain features, and unique equipment considerations.

Site selection for a RAWS facility is a compromise between ideal conditions and practical necessity. Ideally, the equipment should be sited on flat terrain away from metallic fences, overhead power and telephone lines, heavily wooded areas, hangars, and other obstructions for several thousand ft. in all directions. The siting of navigational equipment is the most site demanding, with radio and meteorological equipment siting a little less stringent. Siting for deployable equipment is crucial due to the regularity of moving these systems.

Importance of proper siting

You can group equipment-siting criteria into three categories according to the three main types of equipment: navigation systems, radio systems, and weather systems. The navigation systems include the ILS, VOR, Tactical Air Navigation (TACAN) system, the AN/TPS−75 Radar System, and the AN/TPN−19 Radar Set. Each of these has unique requirements. For complete information on all siting and installation requirements, refer to the applicable equipment technical orders. The radio systems include control tower and radar approach control (RAPCON) facility radios either collocated in the respective facility or installed in remote transmitter and receiver facilities. The primary weather systems used in most air traffic control environments is the AN/FMQ−19 Automated Meteorological Set and the AN/FMQ−23 Fixed Base Weather Observation System. Both systems contain multiple sensors installed at one or more locations surrounding the airfield.

Navigation systems

Navigation systems, as you might imagine, are critical for aircraft to safely land and take off. The following paragraphs take a look at the siting criteria for the various navigational systems: ILS, VOR, TACAN, TPS−75 and the TPN−19.

Instrument landing system siting criteria

Excessive roughness or slope in the terrain surrounding the ILS site can prevent the desired radiation pattern from forming and produce an undesirable course. For this reason, it is critical that the surrounding terrain falls within prescribed tolerances. Refer to figures 4–22, 4–23, and the tables below for descriptions of the specific area tolerances.

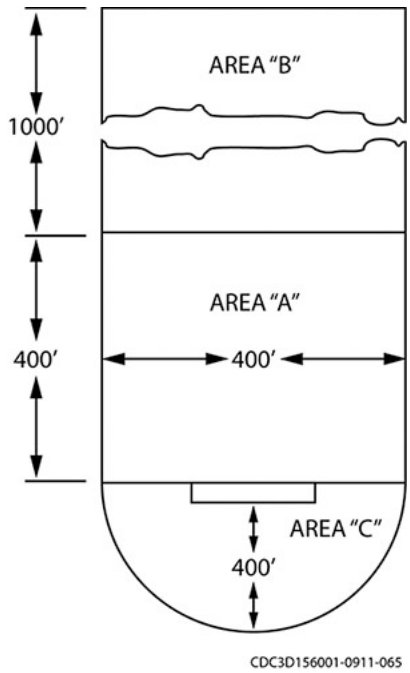

Figure 4–22. ILS localizer siting criteria.

Required ILS Localizer Tolerances	
Area "A"	• Surface roughness must not exceed ±0.5 ft. • Longitudinal tilt (parallel to the on-course line) must not exceed 1:100. • Transverse tilt (perpendicular to on-course line) must not exceed 1:2000.
Area "B"	• No isolated surface roughness exceeding ±2 ft. • Longitudinal tilt must not exceed 2:100. • Transverse tilt must not exceed 1:100.
Area "C"	• Forms a semicircle are behind the course array • No isolated surface roughness exceeding ±2 ft. • Longitudinal and transverse tilt not to exceed 1º.

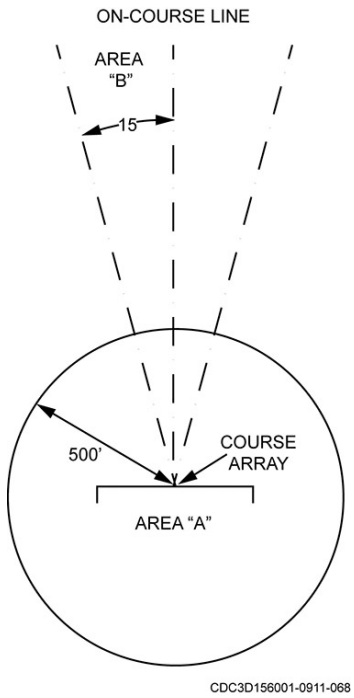

Figure 4–23. ILS glide slope siting criteria.

Required ILS Glide slope Tolerances	
Area "A"	• Ground tilt in any direction not to exceed 1:200. • No roughness greater than ±0.5 ft.
Area "B"	• Ground tilt in any direction not to exceed 1:100. • No roughness to exceed ±2 ft.

The area surrounding the localizer within a 500-ft. radius of the center of the course array (Area "A", fig. 4–23) must be free of reflecting objects such as buildings, power lines, wire-mesh fences, trees, or parked aircraft. For a 30º total sector in front of the course array (Area "B", fig. 4–23) the height of any object must be below a slope line running from the array at a ratio of 1:100. For example, in this 30º sector an object 1,000 ft. beyond the course array should be no more than 10 ft. high.

The area within 500 ft. in front of the glide slope equipment must also be clear of vehicular traffic and other reflecting objects. From 500 to 1,000 ft., the area must be clear of power lines, buildings, trees, and so forth.

The site for a beacon system must be clear of all absorbing, radiating, or reflecting objects over 2 ft. high. These include such objects as trees, hills, or rocks for 200 ft. from the center of the antenna. It also includes objects over 25 ft. high for 300 ft. from the center of the antenna such as water towers, buildings, and power lines. These factors determine the ILS category classification.

A category I ILS provides acceptable guidance information from the point where the pilot intercepts the ILS to the point where the localizer course line intersects the glide path at a height of 100 ft. above the horizontal plane containing the runway threshold. Category II ILS requires more demanding accuracy than category I. The pilot must be able to follow the ILS from point of interception to a point where the localizer course line intersects the glide path at a point above the runway threshold. The most demanding ILS is category III, which allows for a safe landing from the point of interception to touchdown. As a general rule, most military ILSs are setup as category I, while large commercial airports are setup as category II.

Very High Frequency Omnidirectional and Radio Range station siting criteria

Locate the VOR system on the highest suitable ground with the surrounding terrain level or gradually sloping away from the site. Slight variations in ground elevation level are permissible, but must *not exceed* 5 ft. within a radius of 750 ft., as measured from ground level at the shelter.

Metallic fences, above ground power lines, and control lines are *not* permissible within 750 ft. The power and control lines must run underground radially from the terminal pole for at least 2,000 ft. from the shelter.

The height of individual or small tree groups must *not* exceed 15 ft. at distances between 750 and 1,500 ft. and 60 ft. in height at distances between 1,500 and 2,000 ft.

Tactical air navigation system siting criteria

Locate the TACAN antenna on the highest available terrain and mount it as high as possible above level ground to provide maximum line-of-sight range and best performance.

Objects in the immediate vicinity are the ones most likely to degrade performance. Objects beyond approximately 1,000 ft. from the antenna cause shadows, but do not cause substantial errors.

Objects in proximity to the antenna should be under a truncated cone (fig. 4–24), the upper portion of which comprises the base structure of the antenna. The sides of the cone should slope downward from the antenna base at a 35º angle below the horizon, and should extend to meet the sides, which slope up at an angle of 3º above the horizontal. Clear the remaining area, around the antenna, of objects that protrude into this inverted cone.

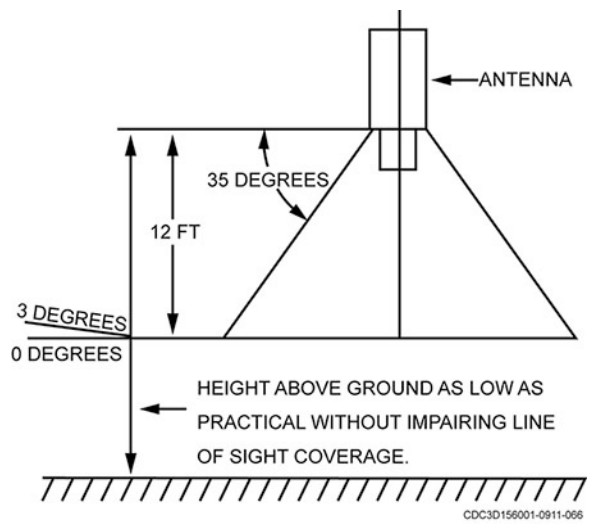

Figure 4–24. TACAN siting criteria.

AN/TPS-75 siting criteria

There are many items to consider in the process of setting up a Global Tactical Advanced Communications System (GTACS) operating location. A site survey determines where to locate the different equipment shelters and pallets. The determination must account for the many varied types of communication required and the radar equipment involved. First, the general requirements for the location of the radar and communication equipment are presented; then secondly, the appropriate radar configuration.

Radar requirements

You need to consider the location for the radar carefully, since the local terrain can affect radar performance. The radiation pattern of the radar can change due to unevenness of the ground surface, obstacles, and the antenna height. The surrounding terrain determines the low-angle radar coverage

by the size and amount of obstacles. In radar terms, screening is the blocking of all or a portion of the radar beam by an obstacle. Because of screening, you need to avoid placing the radar in depressions and valleys. The ground absorbs RF energy and reduces the effective range of the radar.

Clear two types of areas when picking a location for the communications and radar antennas. First, clear a 50-ft. safety zone around each antenna. The purpose of this is to prevent accidental damage to each antenna by vehicles and to provide a fire safety zone. Also, clear a 20-ft.-wide strip for the power cable run for fire safety. Second, clear an area of trees to maintain efficient RF propagation and communications.

Equipment setup

Before starting a site survey, you need a radar coverage diagram. Place the radar in a location that provides the best low-angle maximum-range detection. Locate the radar antenna pallet at the highest elevation and in a clear area to prevent interference with the radiation pattern. Within a radius of 30 ft. around the antenna, the ground cannot be more than ±6 degrees or 10 percent of ground slope. This is due to the leveling capabilities of the pallet. The maximum ground slope for the radar equipment shelter is 2.4 degrees or 4 percent.

Figure 4–25 shows an example of ground slope. As shown in this figure, make sure the antenna pallet is at the same level or higher than the equipment shelter. This reduces the radiation hazard to personnel.

Also shown in this figure are two examples of slope. The radar shelter is on a slope of 4 percent (the maximum allowable slope). The antenna is at its maximum slope of 10 percent. You can use this side-by-side configuration with the antenna erected on outriggers, as shown, or mounted on a truck.

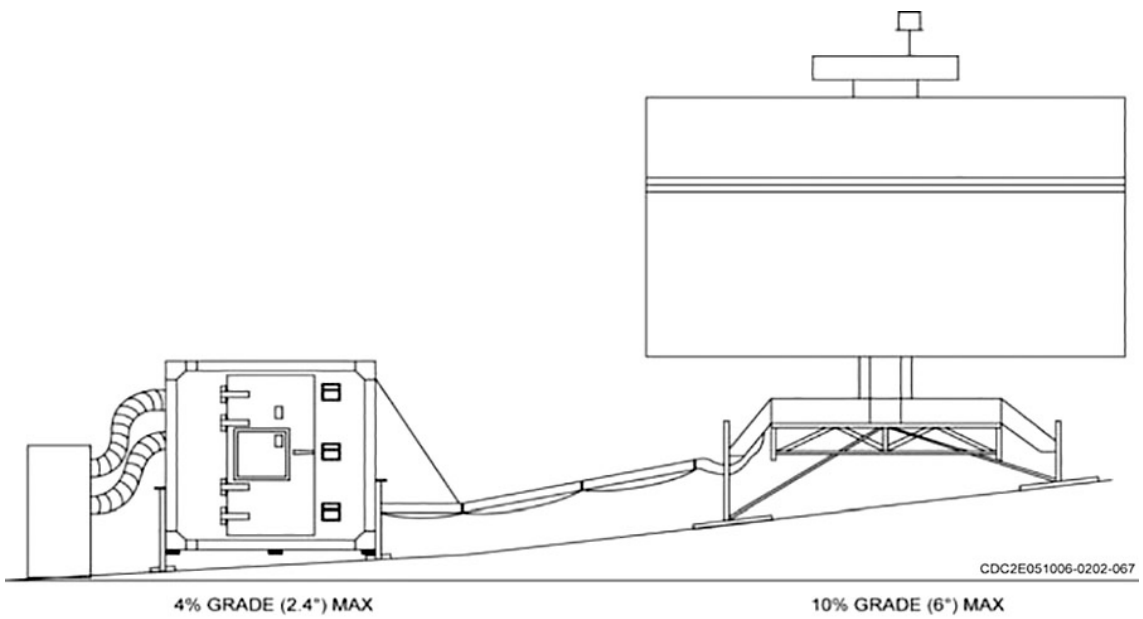

Figure 4–25. AN/TPS-75 ground slope.

The length of the interconnecting waveguide and the bend limits of the flex waveguide limit the distance between the antenna pallet and equipment shelter from a minimum of 7 ft. to a maximum of 21 ft., as shown in figure 4–26.

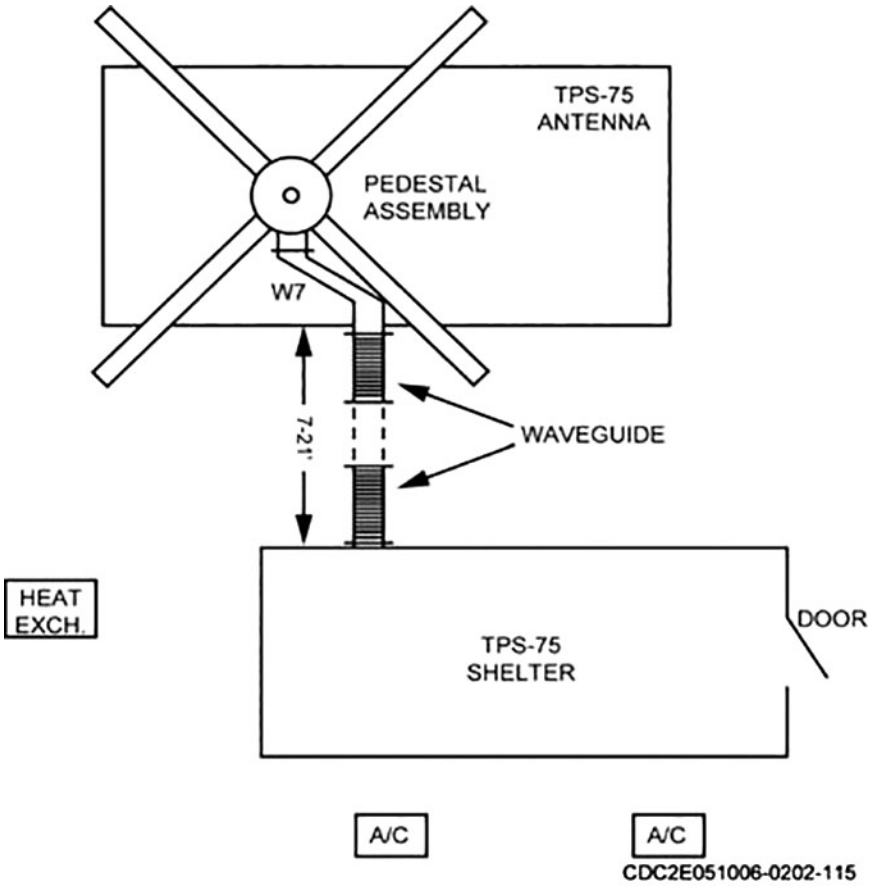

Figure 4–26. AN/TPS-75 shelter and antenna placement.

When placing the equipment on the ground, make sure you fill all holes or grade them so the antenna and shelter rest firmly on the surface. If tree cutting is required, all personnel in the area must wear the appropriate safety items. Only properly trained and qualified personnel are to operate chain saws.

Figure 4–27 shows the equipment alignment and placement for the inline configuration. This configuration has the antenna mounted in the truck. Watch the percent-of-grade indicators to make sure the antenna is level. In either configuration, the purpose of the truck stabilizers is to eliminate the effects of the truck suspension system as the antenna rotates. Do not use the stabilizers to level the truck bed or the antenna. After stabilizing the truck, use the inboard jacks to level the antenna.

Figures 4–26 and 4–27 show the equipment shelter and the ancillary equipment, the air conditioners and heat exchanger. Place the equipment ground so that it does not interfere with the power cables or the waveguide run.

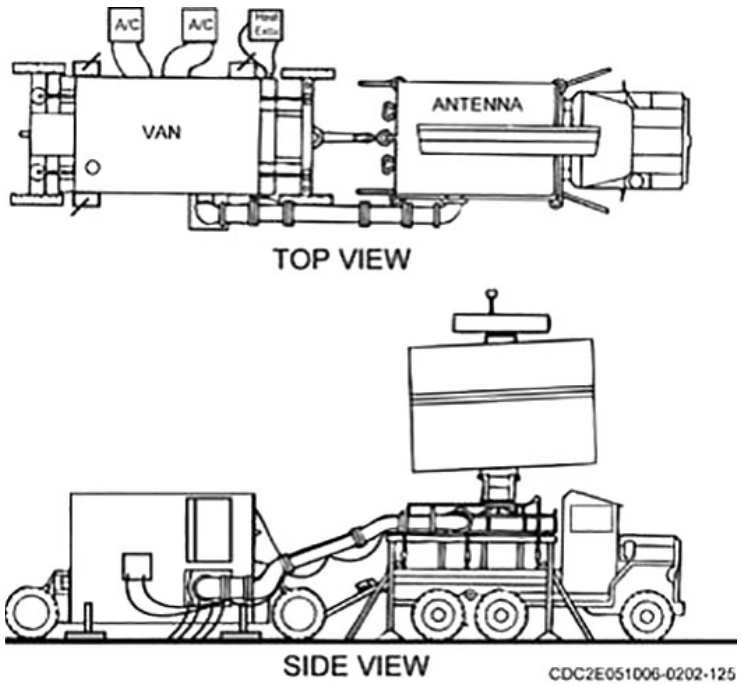

Figure 4–27. Inline configuration equipment placement.

AN/TPN−19 siting criteria

The shelter may be set up on a grade of up to 6 percent and within 10 nautical miles (nmi), for 7.5 GHz remoting, or within 4.3 nmi, for 15 GHz remoting of the AN/TPN–24 Air Surveillance Radar (ASR) and AN/TPN–25 PAR.

Siting requirements

Like the AN/TPS–75 Radar Set, the AN/TPN–19 Landing Control Central (LCC) is transportable and, therefore, must be moved and set up at different locations. Because of this, there are certain siting requirements. Within this area, you will look at some of these requirements.

Equipment setup

When you position the LCC shelters and pallets for proper siting, you must clear the area immediately around the equipment to include the space required for installation of tie-down straps and ground anchors. For additional safety, provide extra space to allow for better maneuverability around the equipment.

The terrain selected for the sites should be relatively flat and firm. The ASR, PAR, and ops shelter have a maximum ground slope (inclination) of six percent. Refer to the service manuals for the shelters for specific factors when selecting the optimum sites for the LCC. These considerations primarily relate to the siting of the PAR shelter relative to the runways it covers, since this places limitations on the rest of the system.

Equipment interface

You should also consider the relative locations of ops and radar shelters in your location, depending upon requirements of the selected remoting interface. If ops and radar shelters are within 100 ft., you can use a coaxial cable, or landline. If separation is less than 2.1 miles, the preferred remoting method is fiber optic cable. Between 2.1 and 10 miles of separation, you will need to use the microwave links (radar data transfer group radios). Ten miles is the maximum separation distance between the operations and radar shelters. The small round antennas off the corners of the shelters, shown in figure 4–28, are the means of microwave communication between the equipment shelters, and you

must keep them clear of obstructions. Therefore, when using microwave remoting, here are conditions you must consider:

- Maintain line-of-sight between the operations shelter microwave antennas and the corresponding microwave antenna on each of the other shelters.
- Moving obstructions such as taxiing aircraft and trucks in the microwave beam area can cause interruption of the microwave transmissions. Whenever possible the selected site should avoid being in the area of frequent ground operation. If possible, avoid sighting the microwave link across taxiways as they can be used to park aircraft and cause permanent blockage of the microwave beam.
- Consider present and potential obstructions and hazards within the near field of the radar coverage. This includes large buildings such as hangars, weather stations, fuel dumps, and ammunition dumps. Also, consider potential obstructions such as areas as designated aircraft parking areas during large-scale operations or projected construction. A check with the proper authorities after the initial site selection can preclude changing the site after you have setup the radar.

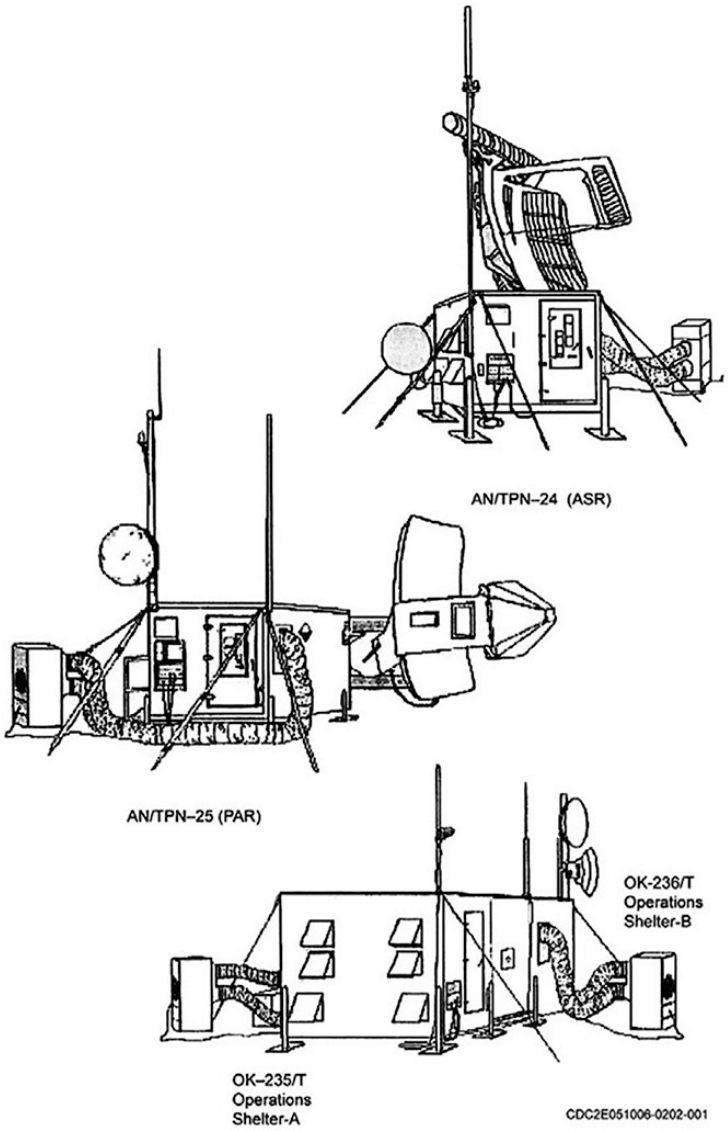

Figure 4–28. AN/TPN–19 Landing Control Central.

Radio siting criteria

The siting criteria for the radio equipment are also very critical. One thing to remember when siting the radio systems is the antenna needs to be high above any obstructions since the radio antennas you deal with are mainly omnidirectional line-of-sight antennas. You must rely on the amount of power produced and the siting of the antenna to push the signal farther out into space to the visible receiving end. The better the antenna matches to the frequency and impedance of the transmitting radio, the more signal will pass through the antenna. The horizontal difference and vertical distances between antennas are very important. Another very important consideration when siting and setting up radio communications is to ensure you get the frequency allocations from the base frequency manager before transmitting.

Weather siting criteria

Contractors normally install the AN/FMQ−19 or AN/FMQ−23 at your location. These systems are generally located in an open area away from the runways and other paved surfaces since those types of structures hold and retain heat. The wind mast mounts on a 10-meter pole that tilts to access the wind sensor. The rest of the sensors mount on either their own pedestals or a 3-meter tower in groups dependent on flying mission requirements.

The different groups are the primary, secondary, and midfield sensor groups. The primary and secondary sensor groups are located at opposite ends of the runway. Midfield sensor groups are normally only installed where the runway is longer than 8,000 ft. or at a location that must meet Category II criteria.

045. Electrical power systems

Most of us have experienced power failure in some form and know what an inconvenience it can be. Now, consider a nighttime power failure during inclement weather with an aircraft on approach; suddenly all voice and navigational guidance is lost. Clearly, such events could have grave consequences. Making back up power an essential part of safety of flight is preventive strategy for such unforeseen events. Batteries or uninterruptible power supplies (UPS) used in conjunction with generators that have automatic transfer switches offer an effective solution to these problems.

All critical air traffic control voice and navigational systems connect to back-up generators equipped with automatic transfer switches. Additionally, these systems use either back-up batteries or uninterruptible power supplies to prevent equipment shut down in the event of momentary power loss during the switchover process from commercial to generator power.

As a RAWS technician, you most likely will not be responsible for maintaining the back-up generators. This is normally the responsibility of the base civil engineering function. You will need to know how to manually start and transfer the power in the event a generator fails to start or transfer on its own. You will receive this training shortly after arrival at your permanent duty station. You will also be responsible for testing and replacing, as needed, the UPS units and back-up batteries connected to your equipment.

Batteries

Batteries are reliable and portable emergency power sources that are becoming more and more specialized. They vary not only in size and shape, but also in performance characteristics. Their applications range from intermittent or constant use, light or heavy current drain, long-term voltage stability, hazardous atmosphere use, and other specific applications. Because batteries are an expensive source of power, it is important that the intended use dictates the proper choice. Batteries are divided in two categories—primary and secondary cells. Each category has several different types. A general familiarity with batteries enables you to decide if the type you are using or choosing is the best to meet your mission requirement.

The primary and secondary batteries discussed in the following paragraphs are a selection based on popularity. It by no means covers the field. What you will learn is that each battery has advantages and disadvantages that you must consider in battery selection. Simply comparing voltage and physical size will not prove satisfactory to determine a suitable replacement. Final selection is a trade-off of desirable and undesirable characteristics and is normally an optimum balance of size and weight against life and operating costs. To choose a battery, you need to know the variety available and the job each type can do. The search for the best is continuing and the batteries in the laboratory today will replace some types currently in use.

Non-rechargeable primary cells

Carbon zinc and alkaline are primary cells. This variety is also called a dry cell because of its moist paste electrolyte. A look at the operational characteristics of these batteries in the table below will show the difference.

Primary Cell Operational Characteristics	
Type	**Description**
Carbon zinc	Carbon zinc is the familiar flashlight battery with a nominal output of 1.5 V. The performance of this cell will be seriously degraded by low temperatures, but you can extend its shelf life by storing it in the 40 degrees Fahrenheit temperature range.
Alkaline	Where high current drain is required, the alkaline battery is the choice. The cell has a nominal voltage of 1.5 V, a very low internal resistance, and a high service capacity. The ampere-hour capacity is relatively consistent over a wide range of discharge rates and current drains. They cover the entire range of all flashlight cells and several others. Alkaline cells cost three times as much as carbon zinc cells but considerably less than mercury type. The cell provides 10 times the service of carbon zinc. Alkaline batteries are used to power many devices such as digital cameras, CD players, motors in models and toys, and so forth. They easily handle current drain that would strain the capacity of other types of batteries. Alkaline cells perform well at high and low temperatures, have a flatter voltage response than carbon zinc, and a have a good shelf life. Unfortunately, alkaline cells contain a very corrosive electrolyte that will destroy sensitive equipment should the cell leak.

Rechargeable secondary cells

Secondary cells are rechargeable cells. Common types are lead-acid, nickel cadmium, and lithium. We will take a look at each of them.

Lead-acid

The automobile storage battery is probably the best-known application of the lead-acid cell. The ratio of charging power to discharge power is a big advantage of this cell. Discharge power, along with low initial costs, makes it preferable where economy is important. It comes in a variety of shapes, sizes, capacities, and qualities. The cost of the best quality can be 10 times that of the cheapest on the market. Quality is usually commensurate with cost. Practically, the lead-acid battery cannot be sealed. The recharge cycle generates gases that must be vented. It has a highly corrosive electrolyte. It cannot recharge at low temperatures, and will freeze if left in the discharged condition at freezing temperatures. The nominal voltage is 2 V per cell. Highly reactive sponge lead makes up the negative electrode, lead dioxide forms the positive material, and a sulfuric acid solution forms the electrolyte.

Nickel Cadmium

NiCad batteries were little known in the country until 30 years ago, although a half century of successful use in Europe proved them an outstanding electrochemical device. They have excellent charge retention properties and may recharge many times without degradation. This type of battery is noted for its high-rate and short-term discharge capability and good low temperature performance. Larger sizes are for emergency lighting, marine power systems, railroad signaling, diesel engine starting, and similar applications. NiCad batteries are now hermetically (airtight seal) sealed for most applications. Applications previously uneconomical because of high-energy requirements are now practical and possible with this complete line of rechargeable batteries. Portable communications equipment, ranging from lap top computers to satellites, is adaptable to this rechargeable sealed cell. The sealed cell is free of all the usual maintenance routines associated with wet rechargeable batteries. The nominal voltage of either a sealed or an unsealed NiCad cell is 1.28 V. However, there are some significant drawbacks to using NiCad.

NiCad batteries have four disadvantages you need to be aware of:

1. There is an explosion hazard. Short-circuiting the negative and positive terminals can cause an explosion and so can overcharging.
2. A thin conductive crystal, called dendrites, may develop causing internal short circuits and premature battery failure.
3. There are environmental consequences for disposing these batteries. They can cause substantial pollution when disposed of in a landfill or incinerated. It is best to recycle NiCad batteries when no longer used.
4. There are recharging problems associated with NiCad batteries. They are subject to the so-called “lazy battery effect” which is the result of overcharging. The “lazy battery” appears to have a full charge but discharges shortly after put into operation. This battery can also experience the “memory effect.” NiCad batteries tend to remember the point in the charge cycle where recharging occurs. During subsequent use, there is a sudden drop in voltage at that same recharging point and the battery acts as if it discharges. However, lithium batteries are not susceptible to the memory effect.

Lithium

Lithium batteries are in many familiar devices such as laptops, digital cameras, phones, MP3 players, and other consumer electronic devices. The nominal voltage is about 3 V per cell, but it can vary from about 2.7 V (discharged) to about 4.23 V (fully charged). The lithium battery is lightweight, has a high power capacity, no memory effect, and has a long shelf life. Because of these ideal features, it is used in many critical devices such as pace makers or other implantable electronic medical devices. Unfortunately, there are some disadvantages.

There have been numerous safety recalls for lithium batteries. Lithium batteries can rupture, ignite, or explode when exposed to high temperatures. Just like the NiCad batteries, if the terminals short together an explosion may occur. There are safety devices, which monitor this battery to prevent harm to the user. These safety devices include a shutdown separator for over temperature, tear away tab for internal pressure, vent for pressure relief, and thermal interrupt for overcharging. One problem is that if these safety mechanisms are used they may cause irreversible damage to the battery and take up valuable space.

Uninterruptible power supply

UPS systems exist for only one reason: to provide an alternate source of clean AC power in an emergency. The UPS is a combination battery charger and inverter. It is used to power critical loads that cannot tolerate power fluctuation or loss. Before introducing the UPS, we need to clarify a few “power-problem” definitions that a UPS is designed to handle.

Defining power problems

You can sum power line faults into five basic categories: sags, blackouts, spikes, surges, and noise. The following table takes a closer look at each.

Power Line Faults	
Type	**Description**
Sag	Sags are short-term decreases in voltage levels, also known as brownouts. Sags are the most common power problem. They are caused by the start-up power demands of many electrical devices (including motors, compressors, large computer systems, shop tools, and so forth). Sags also are an electric company's means of coping with extraordinary power demands. In a procedure known as "rolling brownouts," the utility systematically lowers voltage levels in certain areas for hours or days at a time. Hot summer days, when air conditioning requirements are at their peak, will often prompt rolling brownouts. A sag can "starve" a computer of the power it needs to function, causing frozen keyboards and unexpected system crashes with the resulting loss or corruption of data.
Blackout	A blackout signals total loss of utility power. Excessive demand on power grids, lightning storms, downed power lines, car accidents, earthquakes, and so forth are primary causes. Experience a blackout and you will lose the work you did not save to the computer's hard drive.
Spike	A spike is an instantaneous, dramatic increase in voltage, also called an impulse. This spike can enter electronic equipment and damage or destroy components. Major causes of spikes are from nearby lightning strikes. Spikes also can occur if utility power lines go down in a storm or as the result of a car accident. A single spike can produce catastrophic damage to electronic equipment.
Surge	Surges are short-term increases in voltage, typically lasting at least 1/120 of a second. High-powered electrical motors such as air conditioners and household appliances produce surges. When this equipment is switched off, the extra voltage dissipates through the power line. Computers and similar sensitive electronic devices are designed to receive power in a certain voltage range. Anything outside the expected peak and average voltage levels will stress delicate components and cause premature failure.
Noise	Noise is electro-magnetic interference and radio frequency interference. Electrical noise disrupts the smooth sine wave you should expect from utility power. Electrical noise is caused by many factors and phenomena including lightning, load switching, generators, radio transmitters, and industrial equipment. It may be intermittent or chronic. Noise introduces glitches and errors into executable programs and data files.

Uninterruptible power supply construction and theory of operation

An important part in protection against power problems are UPS systems. In short term, outages the UPS system provides backup power to mask the outage. During long-term outages, the UPS ensures systems are shut down properly or, in situations where a generator is available, the UPS ensures the protected loads continue to receive stable, regulated power throughout the outage. UPS systems also perform an equally valuable function by protecting equipment from fluctuations in power quality.

How the UPS handles incoming power—the UPS topology—determines how effective the UPS can be in shielding sensitive electronics from power fluctuations. It also determines how frequently the UPS must go to battery to protect the load, affecting battery life and performance.

In 1999, the International Electrotechnical Commission (IEC), released standards to make sure consistency in how UPS topologies are identified. The IEC defined three types of UPS topologies as:

1. Passive standby.
2. Line interactive.
3. Double conversion.

There are substantive differences in how each of these three topologies handle incoming power and these differences have a direct impact on UPS performance.

Passive standby

Passive standby is the term the IEC adopted to more accurately describe the topology that has traditionally been referred to as "offline." Figure 4–29 shows the topology of the passive standby UPS.

The IEC defines passive standby as follows: In normal mode of operation, the load is supplied with AC input power via the UPS switch. When the AC input supply is out of UPS preset tolerances, the unit enters stored energy mode of operation (battery power) by activating the inverter and the load transfers to the inverter directly or via the UPS switch. The battery-inverter combination maintains continuity of load power for the duration of the stored energy time or until an acceptable AC input supply, returns to within UPS preset tolerances and the load transfers back.

This is a relatively inexpensive UPS to produce, but due to limitations in how it conditions incoming power, is typically limited to applications that are not mission critical and are smaller than 3 kilovolt amperes.

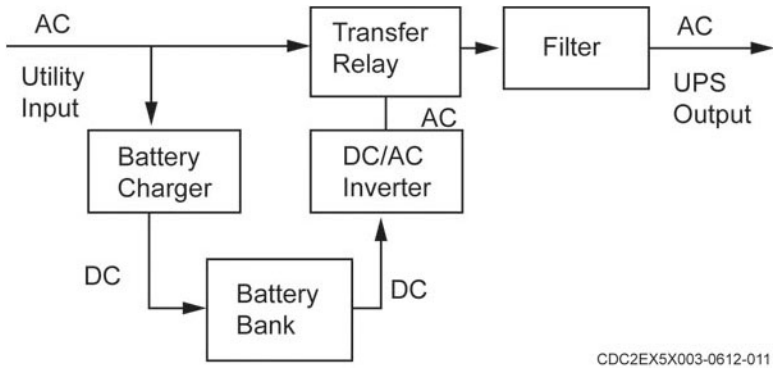

Figure 4–29. Passive standby topology.

Line interactive

Line interactive systems use a transformer or inductor between the utility power source and the load to correct or filter some variations in input power. Figure 4–30 shows the topology of the line interactive UPS.

The IEC defines the operation of a line interactive system as follows: In normal mode of operation, the load gets conditioned power via a parallel connection of the AC input and the UPS inverter. The inverter or the power interface is operating to provide output voltage conditioning and/or battery charging. The output frequency is dependent upon the AC input frequency. When the AC input supply voltage is out of the UPS preset tolerances, the inverter and the battery maintain continuity of load power in stored energy mode of operation and the power interface disconnects the AC input supply to prevent back feed from the inverter. The unit runs in stored energy mode for the duration of the stored energy time or until the AC input supply returns within UPS design tolerances, whichever occurs sooner. In the event of a UPS functional unit failure, the load may transfer to bypass.

This topology provides some degree of power conditioning, but does not effectively isolate the load from major power problems, such as input frequency transients and certain types of input faults. In addition, it is much more dependent on battery power for conditioning than a double conversion topology.

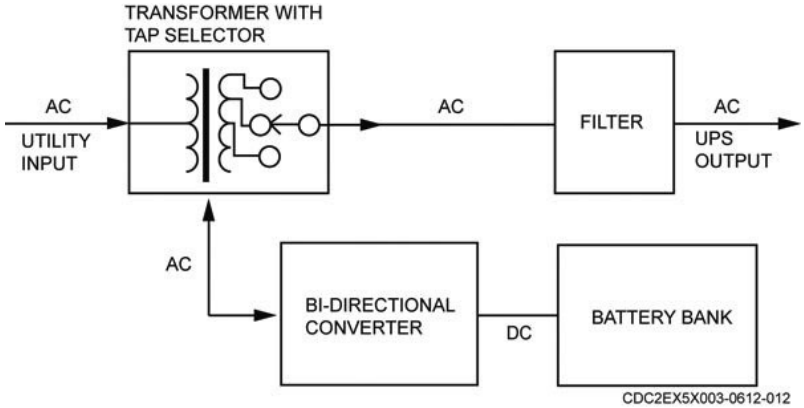

Figure 4–30. Line interactive topology.

Double conversion

What was traditionally referred to as an "online" topology was redefined by the IEC as a double conversion UPS to more accurately distinguish between this topology and the line interactive approach, which some manufacturers tried to label as "online." Figure 4–31 shows the topology of the double conversion UPS.

The IEC defines the double conversion topology as follows: In normal mode of operation, the rectifier/inverter combination continuously supplies the load. When the AC input supply is out of UPS preset tolerances, the unit enters stored energy mode of operation, where the battery/inverter combination continues to support the load for the duration of the stored energy time, or until the AC input returns to UPS design tolerances, whichever is sooner. In the event of a rectifier/ inverter failure or the load current becoming excessive, either transiently or continuously, the unit enters bypass mode where the load is temporarily supplied via the bypass line from primary or secondary power.

Because of the isolation and degree of power conditioning this topology delivers, it is preferred for applications that have low tolerance for downtime and those that use redundant UPS systems and a backup generator. It sometimes refers to "online double conversion" because many people still know this topology by the term that was common for it prior to the creation of the IEC standards.

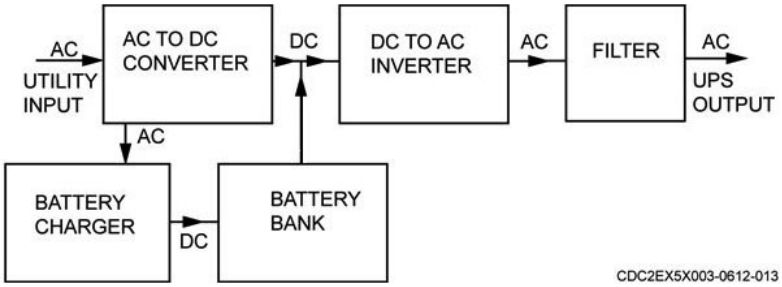

Figure 4–31. Double conversion topology.

Topology and uninterruptible power supply performance

There are significant differences in performance between each of these topologies. The passive standby topology provides limited, if any, power conditioning capabilities and is generally used only in non-critical desktop applications.

The line interactive topology does provide some degree of power conditioning and consequently promotes as a solution for mission critical applications by some UPS manufacturers. However, the difference between a line interactive and double conversion system is as significant as the difference between a passive standby and line interactive system. The double conversion system provides significantly greater protection.

Double conversion systems provide the highest level of protection. The double conversion topology more effectively isolates the load from power problems, including frequency transients and input AC source faults, does not have to go to battery as frequently, and is better able to handle the sags and surges that occur during transition to generator power. Consequently, double conversion UPS systems are better able to handle the extreme conditions that occur before, during, and after a power outage.

Fixed generators and transfer switches

Generator sets produce either single or three-phase power. Choose a single phase set if you do not have any motors above 5 horsepower. Three-phase power is better for motor starting and running. Most homeowners require single phase whereas industrial or commercial applications usually require three-phase power. Three phase generators are set up to produce 120/208 or 277/480 V. Single-phase sets are 120 or 120/240 V.

Critical sites continue their mission when the primary electrical source fails with the use of automatic transfer switches (ATS). Automatic transfer switches are an integral part of the power generation process, allowing smooth and immediate transfer of electrical current between multiple sources and the load. When the generator is operating, the transfer switch prevents dangerous feedback of current into the utility's system. It also ensures that different power sources fully synchronize before their power combines or loads will transfer, which is imperative for safe operation.

The ATS senses when utility power interrupts and starts up the generator if the utility power remains absent. In about 5 to 10 seconds, when the generator is producing full power, the transfer switch disconnects the load from the utility and connects it to the generator, restoring electricity to the load. The transfer switch continues to monitor utility power, and when it restores, switches the load from the generator back to the utility. Once the generator is disconnected, it goes through a cool-down routine and automatically shuts down.

Self-Test Questions

After you complete these questions, you may check your answers at the end of the unit.

043. Importance of Radar, Airfield & Weather Systems in the aerodrome

1. Who conducts flight check inspections?

2. Explain what a runway incursion is.

3. Who do you communicate with during the communication portion of the airfield driving test?

4. When are light guns used?

044. Equipment siting criteria

1. Describe the ideal location for RAWS equipment siting.

2. When siting a localizer, what is the maximum height of surface roughness for area “A”?

3. What are the three ILS categories?

4. Where should you locate the VOR system?

5. What should objects in proximity to the TACAN antenna be under?

6. State three characteristics that affect radiation pattern of the AN/TPS–75 radar.

7. The length of the AN/TPS–75 interconnecting waveguide and the bend limits of the flex waveguide limit the distance between the antenna pallet and equipment shelter to what distance range?

8. What are the different remoting requirements to consider when siting the AN/TPN–19?

9. What is the maximum separation distance between the AN/TPN–19 operations and radar shelters?

10. When siting weather equipment, when would you need a midfield sensor group?

045. Electrical power systems

1. What are the two battery categories?

2. Which battery category includes the common disposable flashlight battery?

3. State four disadvantages of using NiCad batteries.

4. What are the five types of power line faults?

5. Name the three UPS topologies.

6. What UPS topology provides the highest level of protection?

7. In a generator, what allows smooth and immediate transfer of electrical current between multiple sources and the load?

Answers to Self-Test Questions

034

1. Continuity, resistance, current, voltage, diode, and temperature checks.
2. Analog bar graph.
3. Between −1,000 and +1,000 VDC.
4. Between 0 and 1,000 VAC.
5. Placing the leads across a "good" diode produces an "OL" (open) on the display in one direction while reversing the leads produces a continuous audible tone indicating a short.

035

1. It shows you an actual graphing of the signal's amplitude as it relates to time (amplitude vs time). With this display you can tell its wave shape, its frequency, and its amplitude and whether the signal is relatively pure.
2. (1) Voltage information on the vertical, or Y, axis (up-down); (2) Time information on the horizontal, or X, axis (left-right); (3) Depth information on the Z axis represented by variations in intensity (in-out).
3. Horizontal, or X, axis.
4. TIM/DIV control.
5. Ground (GND) position.
6. To ensure linear beam movement, meaning the beam moves at the same rate from start to finish.
7. Select a probe/scope combination that has a Rin at least 100 times greater than the source impedance.
8. A 100:1 divider probe to reduce the possibility of damaging the probe.

036

1. RF signal generators.
2. (1) Verifying transmission within designated frequency ranges by comparing transmitter outputs with known radio frequencies; (2) Aligning telemetry receivers by injecting the system with range-standard modulated RF; (3) Check transmission lines and antenna systems for proper operation.
3. Audio signal generators.
4. Sine wave, square wave, triangular wave and sawtooth shapes.

037

1. 10 to 1, or 10:1.
2. When 1 mW is used as a reference level, the ratio between the actual power and the 1 mW reference is expressed in dBm.
3. 5 W.
4. Absolute or relative power.
5. Peak power meter.
6. Converts RF energy into a linear DC voltage that can be used by the power meter.
7. It calculates the equivalent DC current value of an AC waveform.
8. (1) Ensure the plug-in elements are selected based on the proper frequency and power to be measured; (2) Keep the arrows on the plug-in elements flow according to the traveling RF waves; otherwise, the RF waves traveling in the opposite direction of the arrow cancel each other out.
9. They are constructed so that RF power is absorbed with minimal reflections and the absorbed energy is converted to heat.

038

1. AM–48, transmission test set.
2. (1) End-to-end; (2) Loopback; (3) Testing with responders.
3. Time domain reflectometer.
4. The OTDR is an oscilloscope with a built-in laser that sends a light pulse into the end of a fiber and measures the loss of light as it is reflected back to the source.
5. Total RMS distortion and gives a ready determination of percentage of distortion.
6. 28 VDC pulse signal.
7. Tone generator and inductive amplifier.

039

1. Electronic counter.
2. To discriminate between frequencies while still measuring each power level and display information in the frequency domain.
3. (1) FM; (2) AM; (3) Pulsed RF; (4) Frequency drift during system warm-up; (5) Long- and short-term frequency stability; (6) Parameters such as subcarrier oscillator outputs and complex signals.
4. To assist in monitoring signals specifically in surveillance and secure communications, radar, electronic warfare, commercial wireless, and any signal from 5 kHz up to 50 GHz.

040

1. ILS localizer and glide slope, VOR, and marker beacon equipment.
2. DDM, percent of modulation, RF, AF, THD, and perform SA.
3. Amplitude and phase of two RF voltages of the same frequency.
4. (1) Do not exceed the maximum input voltage rating; (2) Handle the probes with care.
5. Provides bench testing and online monitoring of the Video Signal Processor CP-1045/T of the AN/TPX–42A Interrogator Set.
6. Radar power, frequency, PRF, range tracking capabilities, receiver bandwidth, and minimum discernible signal.
7. MSSR.

041

1. Generates, monitors, and captures data traffic moving across a network connection.
2. CSM.
3. 20.

042

1. Monitor and access multiple conductors; including the conductors of EIA RS–232 and ITU V.24 interfaces.
2. Earth ground tester.
3. 10 Ω or less.

043

1. FAA personnel with assistance from RAWS personnel.
2. When an aircraft, vehicle, or person enters the protected area of a surface designated for the landing and take-off of aircraft without approval from ATCT.
3. ATCT.
4. In the event of a radio failure.

044

1. On flat terrain away from metallic fences, overhead power and telephone lines, heavily wooded areas, hangars, and other obstructions for several thousand ft. in all directions.
2. Must not exceed ±0.5 ft.
3. (1) Category I ILS provides acceptable guidance information from the point where the pilot intercepts the ILS to the point where the localizer course line intersects the glide path at a height of 100 ft. above the horizontal plane containing the runway threshold. (2) Category II requires that the pilot must be able to follow the ILS from point of interception to a point where the localizer course line intersects the glide path at a point above the runway threshold. (3) Category III allows for a safe landing from the point of interception to touchdown.
4. On the highest suitable ground with the surrounding terrain level or gradually sloping away from the site.
5. A truncated cone.
6. (1) Unevenness of the ground surface; (2) Obstacles; (3) Antenna height.
7. Minimum of 7 ft. to a maximum of 21 ft.
8. The shelter may be set up within 10 nmi for 7.5 GHz remoting, or within 4.3 nmi for 15 GHz remoting of the AN/TPN–24 ASR and AN/TPN–25 PAR.
9. 10 miles.
10. Where the runway is longer than 8,000 ft. or at a location that must meet Category II criteria.

045

1. Primary and secondary cells.
2. Primary.
3. (1) Explosion hazard; (2) Dendrites may develop causing internal short circuits and premature battery failure; (3) Environmental consequences for disposing the batteries; (4) Recharging problems called the "lazy battery effect."
4. (1) Sags; (2) Blackouts; (3) Spikes; (4) Surges; (5) Noise.
5. (1) Passive standby; (2) Line interactive; (3) Double conversion.
6. Double conversion.
7. Automatic transfer switch.

Complete the unit review exercises before going to the next unit.

Unit Review Exercises

Note to Student: Consider all choices carefully, select the *best* answer to each question, and *circle* the corresponding letter. When you have completed all unit review exercises, transfer your answers to the Field-Scoring Answer Sheet.

Do not return your answer sheet to the Air Force Career Development Academy (AFCDA).

73. (034) When using the Fluke 8025A multimeter, what is the input direct current (DC) voltage range that can be measured when the function selector is in the DC volts (V) position?
    a. 0 to +320.
    b. 0 to +1000.
    c. –320 to +320.
    d. –1000 to +1000.

74. (034) When using the Fluke 8025A multimeter for diode checks, what does it mean when you get an "OL" indication when you place the leads across the diode and *also* when the leads are reversed?
    a. Diode is considered operational.
    b. You need to use a different probe.
    c. Diode is considered non-operational.
    d. Diode needs to be checked while connected to a circuit.

75. (035) What oscilloscope control adjusts how fast the trace is drawn across the screen?
    a. Ground (GND) input coupling switch.
    b. Volts per division (VOLTS/DIV).
    c. Time per volts (TIM/VOLTS).
    d. Time per division (TIM/DIV).

76. (035) Which is *not* a reason why oscilloscope probes are used?
    a. They are shielded to block noise and extraneous signals.
    b. They are an isolation device for the oscilloscope input.
    c. Connects the oscilloscope to the device under test.
    d. They ensure circuit loading.

77. (035) Before measuring a signal with the oscilloscope and the source voltage is totally unknown, it is wise to start with a divider probe rated at
    a. 1:1.
    b. 10:1.
    c. 100:1.
    d. 150:1.

78. (036) Which test equipment item would you use to check transmission lines and antenna systems for proper operation?
    a. Earth ground tester.
    b. Radio frequency (RF) generator.
    c. AN/TPM−32 Video Signal Processor test set.
    d. Portable Instrument Landing System Receiver (PIR).

79. (036) Which is *not* a waveform produced by a function generator?
    a. Sine wave.
    b. Square wave.
    c. Sawtooth wave.
    d. Compound wave.

80. (037) The decibel (dB) does not (in itself) indicate power; instead, it indicates a ratio or comparison between
    a. two power levels.
    b. the audio and frequency levels.
    c. the bel and the one-milliwatt (mW) reference.
    d. 10 bels and the one-mW reference.

81. (037) What feature of the 436A power meter is *ideal* for monitoring fast changes while adjusting peak transmitter output?
    a. Autorange.
    b. Digital display.
    c. Auxiliary meter.
    d. Relative power meter.

82. (037) For greatest wattmeter accuracy, select the power element(s) having
    a. the highest possible power range that will cover the measured signal.
    b. the lowest possible power range that will not result in over-ranging.
    c. a power range ratio of at least 100:1.
    d. N-type connectors.

83. (037) When bench-checking a transmitter, what test equipment should you use to absorb any transmitted radio frequency (RF) signals?
    a. Ameritec Model (AM)–48 transmission test set.
    b. Time domain reflectometer (TDR).
    c. Dummy load.
    d. Wattmeter.

84. (038) What test equipment enables technicians to communicate with telephone switching equipment through the use of pulse, dual tone multi-frequency (DTMF), and multi-frequency (MF) dialing?
    a. Breakout box.
    b. Ameritec Model (AM)–48 transmission test set.
    c. Time domain reflectometer (TDR).
    d. Tone generator with inductive amplifier.

85. (038) When testing a fiber optic (FO) cable, what is the energy that travels back toward the optical source called?
    a. Backscatter.
    b. Fiber cladding.
    c. Impedance changes.
    d. Core refractive index.

86. (038) When measuring high noise figures with a noise figure meter, at what decibel (dB) level does the result become very inaccurate?
    a. 1.
    b. 3.
    c. 5.
    d. 10.

87. (038) The tone generator applies an audio tone to a pair or cable and the inductive amplifier is used to
    a. listen for the generated tone at the other end.
    b. listen for noise that may affect signal transmission.
    c. amplify any noise that may affect signal transmission.
    d. amplify the generated tone to transmit over long distances.

88. (039) What test equipment is essentially an upgraded, portable spectrum analyzer?
    a. Vector network analyzer.
    b. Peak power analyzer.
    c. Noise figure meter.
    d. Field Fox.

89. (040) On the vector voltmeter, the phase indicated on the meter represents the relative phase between what two signals?
    a. A channel with respect to the B channel.
    b. B channel with respect to the A channel.
    c. B channel is lagging by 90 degrees and is 180 electrical degrees longer than the A side.
    d. A channel is lagging by 90 degrees and is 180 electrical degrees longer than the B side.

90. (040) What Precision Approach Radar (PAR) test set allows you to test radar power, frequency, pulse repetition frequency (PRF), range tracking capabilities, receiver bandwidth, and minimum discernible signal?
    a. CP−1045/T.
    b. AN/TPM−32.
    c. AN/TPX–42A.
    d. AN/UPM–145.

91. (041) How many different pieces of test equipment does a communication service monitor (CSM) have combined in one package?
    a. 10.
    b. 12.
    c. 16.
    d. 20

92. (042) What test equipment allows individual access to all signal conductors in a 25-wire Recommended Standard (RS)–232 connector?
    a. Cable key.
    b. Breakout box.
    c. Communication service monitor (CSM).
    d. International Telecommunication Union (ITU) interface.

93. (042) Which is *not* an acceptable action to take if a communications facility ground testing reveals more than 10 ohms (Ω) resistance?
    a. Pouring an electrolytic salt solution into the soil.
    b. Watering the soil around the facility.
    c. Installing parallel ground rods.
    d. Installing deeper ground rods.

94. (043) When an aircraft, vehicle, or person enters the protected area of a surface designated for the landing and take-off of aircraft without approval from Air Traffic Control Tower (ATCT), it is called a
    a. mishap.
    b. runway overrun.
    c. runway incursion.
    d. controlled movement area.

95. (044) When selecting a site for the Instrument Landing System (ILS), what is the localizer maximum height tolerance, in feet, for surface roughness in area “A”?
    a. ±0.5.
    b. ±1.0.
    c. ±1.5.
    d. ±5.

96. (044) Because of screening, you need to avoid placing the AN/TPS−75 Radar System in
    a. flat open areas.
    b. depressions and valleys.
    c. areas with minimal obstacles.
    d. an area with a 2 percent slope.

97. (044) When siting weather equipment, when are midfield sensor groups necessary?
    a. Runway is longer than 8,000 feet (ft.) or the location must meet Category II criteria.
    b. Runway is longer than 5,000 ft. or the location must meet Category I criteria.
    c. Runway is longer than 5,000 ft. but less than 8,000 feet.
    d. Runway location must meet Category I criteria.

98. (045) A non-rechargeable, primary battery is often referred to as a(n)
    a. electrolyte cell.
    b. paste cell.
    c. wet cell.
    d. dry cell.

99. (045) Which is *not* a type of rechargeable, secondary cell battery?
    a. Lithium.
    b. Lead-acid.
    c. Carbon Zinc.
    d. Nickel Cadmium (NiCad).

100. (045) Which is *not* an uninterruptible power supply (UPS) topology?
    a. Passive standby.
    b. Line interactive.
    c. Double conversion.
    d. Passive conversion.

Glossary of Abbreviations and Acronyms

Δ	delta
µA	microamperes
µm	micrometer
µV	microvolt
µW	microwatt
Ω	ohms
% mod	percent of modulation
λ	wavelength
±	plus or minus
A	amps/amperes
AC	alternating current
ADI	airfield driving instruction
AF	audio frequency
AFI	Air Force instruction
AGC	automatic gain control
ALC	automatic load control
ALOD	automatic lockout and override device
AM	amplitude modulation; Ameritec Model
APC	automatic phase control; automatic power control
ARQ	automatic retransmit on request
ASCII	American Standard Code for Information Interchange
ASR	Air Surveillance Radar
ATC	air traffic control
ATCT	air traffic control tower
ATM	Asynchronous Transfer Mode
ATR	antenna transfer relay
ATS	automatic transfer switch
AUX	auxiliary
BAT	battery
BC	bus controller
BCC	block check character
BCD	binary coded decimal
BIT	built-in test
BW	bandwidth

C	capacitor/capacitance
CAL	calibrated
CAL ADJ	calibration adjustment
CB	citizen's band
CEMF	counter-electromagnetic force
CG	chassis ground
CRC	cyclic redundancy check
CRT	cathode ray tube
CSM	communications service monitor
CTS	clear to send
CVSD	continuously variable slope delta
CW	continuous wave
CWDM	coarse wave division multiplexing
D/A	digital-to-analog
DALR	digital audio legal recorder
dB	decibel
dB/km	decibel-per-kilometer
dBc	decibels relative to the carrier
dBi	decibels referenced to isotropic antenna
dBm	decibels referenced to a 1 milliwatt standard
DC	direct current
DCD	data carrier detect
DCE	data communications equipment
DDM	difference in the depth of modulation
DSB	double sideband
DSR	data set ready
DTE	data terminal equipment
DTMF	dual tone multi-frequency
DTR	data terminal ready
DUT	device under test
DWDM	dense wave division multiplexing
E	ratio of voltage
E/L	earth leakage
E-B	emitter-base
E-C	emitter-collector
E-field	electric field

EIA	Electronic Industries Alliance
EMD	equilibrium-mode distribution
EMF	electromotive force
EMI	electromagnetic interference
F	farads
FAA	Federal Aviation Administration
FASR	fast attack slow release
FCC	Federal Communications Commission
FDM	frequency division multiplexing
FEC	forward error control
FM	frequency modulation
FO	fiber optic
FREQ	frequency
ft.	foot/feet
fW	femtowatt
FWD	forward
g	gram
GATR	ground-to-air transmit and receive
GHz	gigahertz
GI	graded-index
GND	ground
GP	glide path
GPIB	general purpose interface bus
GS	glide slope
GTACS	Global Tactical Advanced Communications System
H	henry
HF	high frequency
H-field	magnetic field
HP	high pass
HP-IB	Hewlett Packard interface bus
HV	high voltage
Hz	hertz
I	current
I^2R	resistive/copper loss
IC	integrated circuit
IEC	International Electrotechnical Commission

IEEE	Institute of Electrical and Electronics Engineers
IF	intermediate frequency
IFF/SIF	identification, friend or foe/selective identification feature
ILS	instrument landing system
IP	Internet protocol
ITU	International Telecommunication Union
kHz	kilohertz
km	kilometer
kΩ	kilo ohm
L	inductor/inductance
LAN	local area network
LCC	Landing Control Central
LCD	liquid crystal display
LED	light-emitting diode
LO	local oscillator
LOC	localizer
LOS	line-of-sight
LP	low pass
LPA	linear power amplifier
LRC	longitudinal redundancy check
LSB	lower sideband
mA	milliamp
mA/A	milliamps/amps
MAN	metropolitan area network
MB	marker beacon
MBTS	Monopulse Beacon Test Set
MDT	maintenance data terminal
MF	multi-frequency
MHz	megahertz
MI	modulation index
MIL-STD	military standard
MOD	modulation
MODEM	modulation/demodulation
ms	millisecond
MSSR	Monopulse Secondary Surveillance Radar
mV	millivolt

mW	milliwatt
MΩ	megaohm
N	negative
NA	numerical aperture
NB	narrowband
NC	normally closed
NIC	network interface card
NiCad	Nickel Cadmium
nm	nanometer
nmi	nautical mile
NO	normally open
NPN	negative/positive/negative
ns	nanosecond
ns/km	nanoseconds per kilometer
OL	over load
OTDR	optical time domain reflectometer
P	power; positive; primary
PA	power amplifier
PAM	pulse amplitude modulation
PAR	Precision Approach Radar
PCC	process control and communications
PCM	pulse code modulation
PEP	peak envelope power
pF	picofarad
P_I	forward power
PIN	positive/intrinsic/negative
PIR	Portable Instrument Landing System Receiver
pk-pk	peak to peak
PLL	phase locked loop
PM	phase modulation
PN	positive/negative
PNP	positive/negative/positive
POSN FB	position feedback
PPD	positive peak detector
PPD	positive peak detector
PPM	pulse position modulation; peak power meter

PPS	pulse per second
P_R	reflected power
PRF	pulse repetition frequency
PTT	push-to-talk
pW	picowatt
PWM	pulse width modulation
R	resistance
RAM	random-access memory
RAPCON	radar approach control
RAWS	Radar, Airfield & Weather Systems
RC	receive clock; resistance-capacitance
RD	receive data
REF	reference
REL	relative
RF	radio frequency
RFI	radio-frequency interference
RFL	reflected
Rin	input resistance
RMC	Regional Maintenance Center
RMS	root-means-square
RMT	remote terminal
RS	recommended standard
RTN	return
RTS	request to send
RX	receive
S	secondary
SA	spectrum analysis
SAFR	slow attack fast release
SCPI	Standard Commands for Programmable Instrumentation
SCR	silicon controlled rectifier
SG	signal ground
SI	step-index
SWR	standing wave ratio
T	total
TACAN	Tactical Air Navigation
TC	transmit clock

TD	transmit data
TDR	time domain reflectometer
THD	total harmonic distortion
TIM/DIV	time per division
TO	technical order
TX	transmit
UDR	ultra high frequency digital receiver
UDT	ultra high frequency digital transmitter
UHF	ultra high frequency
UNCAL	uncalibrated
UPS	uninterruptible power supply
USB	upper sideband
V	volts; voltage
VAC	volts alternating current
VDC	volts direct current
VDR	very high frequency digital receiver
VDT	very high frequency digital transmitter
VHF	very high frequency
VoIP	Voice over Internet Protocol
VOLTS/DIV	volts per division
VOR	Very High Frequency Omnidirectional and Radio Range
VOX	voice operated exchange
Vpk-pk	volts, peak-to-peak
VRC	vertical redundancy check
VRMS	micro-volts root-means-square
vs	versus
VSWR	voltage standing wave ratio
VVM	vector voltmeter
W	watt
WAN	wide area network
WB	wideband
WDM	wave-division multiplexing
X_C	capacitive reactance
X_L	inductive reactance
XMT/RCV	transmit/receive

Zin	input impedance
Zo	characteristic impedance

Student Notes

AFSC 1C853
1C853B 01 1909
Edit Code 01