CDC A2T351

Firefighting and Refueling Vehicle and Equipment Maintenance Journeyman

Volume 1. Firefighting Vehicle Systems

Air Force Career Development Academy

Air University

Air Education and Training Command

A2T351 01 1805, Edit Code 01

AFSC 2T351A

Author: MSgt Jason M. Lubas
344th Training Squadron, Detachment 1
Vehicle Management School House (AETC)
344 TRS, Det 1/TTAD
480 West Road
Port Hueneme, CA 93043
DSN: 551–1095

E-mail address: 344TRSDet1.CDC.Contact@us.af.mil

Instructional Systems Specialist: Evangeline K. Walmsley

Editor: Catherine Parker

Air Force Career Development Academy (AFCDA)
Air University (AETC)
Maxwell AFB, Gunter Annex, Alabama 36114–3107

Material in this volume is reviewed annually for technical accuracy, adequacy, and currency. For SKT purposes the examinee should check the *Enlisted Promotions References and Requirements Catalog* to determine the correct references to study.

CAREER DEVELOPMENT COURSE (CDC) A2T351, *Firefighting and Refueling Vehicle Maintenance Journeyman,* is a two-volume course. Volume 1 contains three units that cover the P-19, P-23, and P-34 Rapid Intervention Vehicle (RIV) fire trucks.

Unit 1 covers the P-19 fundamentals, including information of different variants and maintenance of the dispensing and electrical systems.

Unit 2 covers the P-23 operating fundamentals and maintenance of the dispensing system and driveline components

Unit 3 covers the P-34 RIV. The fundamentals and maintenance of the air, dispensing, and electrical systems are discussed. The RIV is a relatively new vehicle to the Air Force inventory.

Volume 2 of CDC A2T351 discusses the fundamentals and repair of the R-11 aircraft refueler truck, its dispensing systems, and support equipment.

A glossary is included for your use.

Code numbers on figures are for preparing agency identification only.

The use of a name of any specific manufacturer, commercial product, commodity, or service in this publication does not imply endorsement by the Air Force.

To get a response to your questions concerning subject matter in this course, or to point out technical errors in the text, unit review exercises, or course examination, call or write the author using the contact information on the inside front cover of this volume.

NOTE: Do not use Air Force Instruction (AFI) 38–402, *Airmen Powered by Innovation,* to submit corrections for printing or typographical errors. For Air National Guard (ANG) members, do not use Air National Guard Instruction (ANGI) 38–401, *Suggestion Program.*

If you have questions that your supervisor, training manager, or education/training office cannot answer regarding course enrollment, course material, or administrative issues, please contact Air University Educational Support Services at http://www.aueducationsupport.com. Be sure your request includes your name, the last four digits of your Social Security number, address, and course/volume number.

This volume is valued at 12 hours and 4 points.

NOTE:

In this volume, the subject matter is divided into self-contained units. A unit menu begins each unit, identifying the lesson headings and numbers. After reading the unit menu page and unit introduction, study the section, answer the self-test questions, and compare your answers with those given at the end of the unit. Then complete the unit review exercises.

Page

Unit 1. P-19 Firefighting Truck 1–1

1–1. P-19 Firefighting Truck Systems 1–1

1–2. P-19 Firefighting Truck Maintenance 1–20

Unit 2. P-23 Firefighting Truck 2–1

2–1. P-23 Firefighting Truck Systems 2–1

2–2. P-23 Firefighting Truck Maintenance 2–11

Unit 3. P-34 Rapid Intervention Vehicle 3–1

3–1. P-34 Rapid Intervention Vehicle Fundamentals 3–1

3–2. P-34 Dispensing and Electrical System Troubleshooting 3–17

Glossary G–1

Please read the menu for Unit 1 and begin ➔

Unit 1. P-19 Firefighting Truck

1–1. P-19 Firefighting Truck Systems 1–1
001. Drivetrain 1–1
002. Dispensing system 1–4
003. Electrical system 1–11
004. Winterization system 1–12
005. Air system 1–14
1–2. P-19 Firefighting Truck Maintenance 1–20
006. Troubleshooting the power divider 1–20
007. Troubleshooting the dispensing system for low pressure 1–23
008. Turret system maintenance 1–26
009. Booster heater maintenance 1–29

AS IMPLIED BY THE NAME, Aircraft Crash and Structural Firefighting Truck, the A/S32P-19 (called the P-19) is an extremely important vehicle. Firefighters use the P-19 in dire circumstances. As you would expect, the design, manufacture, service, and maintenance of the P-19 requires the utmost care and attention. After all, there is no doubt that an aircraft crash involving fire can be a terrifying experience for those involved and is often a life or death situation. Your job as a specialized vehicle maintenance journeyman carries great responsibility. How well you do your job may well decide the success or failure of firefighting operations at your base. Covered in this unit are the fundamental systems and maintenance of the P-19 firefighting truck.

This unit references the P-19, P-19A, and P-19B model fire trucks. Although the trucks are similar, there are slight differences. For example, the basic P-19 is for use on aircraft crashes or fires only. The P-19A is a Marine Corps variant which has both aircraft and structure firefighting capabilities. The P-19B is an Air Force truck, used for aircraft crash and structure fires. Figure 1–1 shows the P-19A and P-19B.

1–1. P-19 Firefighting Truck Systems

This section covers the P-19 firefighting truck systems. You must understand the fundamental systems of the P-19 before you can effectively maintain the truck. The fundamental P–19 truck systems covered in this lesson include the drivetrain, dispensing system, electrical system, winterization system, and air system.

001. Drivetrain

The P-19 drivetrain is unique; the drivetrain actually starts with the engine at the rear of the truck. You will study performance characteristics and information about each drivetrain component.

Performance characteristics

The P-19 has a diesel engine, all-wheel drive chassis. The P-19, fully loaded, accelerates from a standing start to 50 miles per hour (mph) in 25 seconds on level pavement. The P-19's top speed is 65 mph which allows for quick response to an emergency. Additionally, the P-19 is capable of maneuvering at low speed in difficult terrain with its fire equipment operating at full discharge. The truck can ascend and descend a 60-percent grade and negotiate an 18-inch wall.

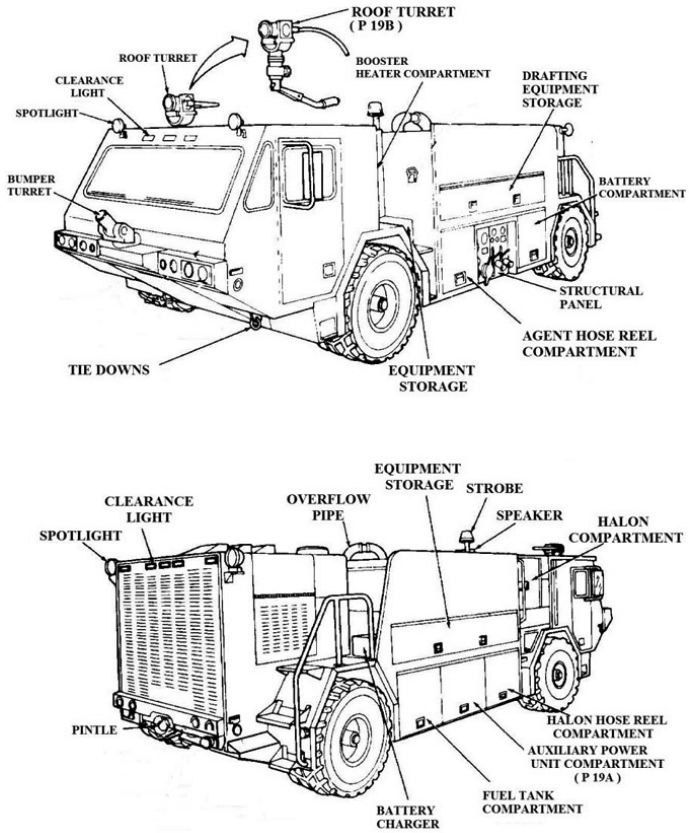

Figure 1–1. Truck exterior arrangement (P-19A and P-19B).

Engine

Refer to figure 1–2 to identify the location of drivetrain components. As with all powered vehicles, you must have power. The power comes from an in-line, six-cylinder, four-cycle diesel engine manufactured by Cummins. This engine is equipped with a turbocharger and an aftercooler for smooth, powerful operation. The engine provides power to simultaneously drive the transmission and the firefighting system. To divide the engine power between these two drives, the P-19 uses a power divider.

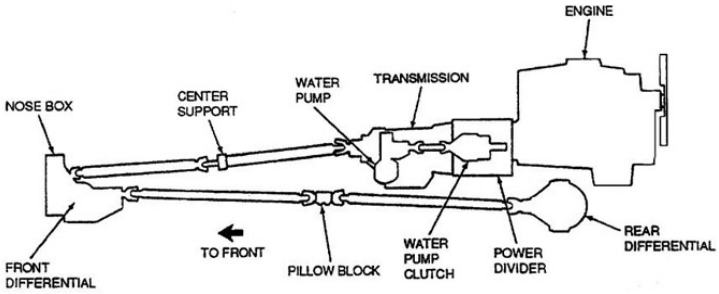

Figure 1–2. Drivetrain.

Power divider

The power divider is mounted on the flywheel housing between the engine and transmission (fig. 1–3). The power divider is an important component. Not only does the power divider provide a drive to the transmission, it also provides a means to drive the dispensing system water pump. A modulating clutch, located inside the power divider, provides the means to drive the transmission. A water pump clutch wing, attached to the power divider, houses the dispensing systems water pump clutch. The water pump clutch is in constant mesh with the engine through a series of gears starting at the input side of the modulating clutch.

Modulating clutch

The modulating clutch provides the operator a means to safely operate the dispensing system at full engine speed, while driving the truck.

The 13½-inch, wet-type modulating clutch, located inside the power divider, is a spring applied, air released clutch. When in ROAD mode (normal driving) the modulating clutch is applied, allowing full engine power to the transmission. When placing the agent selector valve in the WATER or FOAM position and a discharge valve is open, air pressure at a minimum of 90 pounds per square inch (psi) activates the modulating clutch release air chamber. This air pressure overcomes the clutch spring pressure and disengages the modulating clutch, thus breaking the power flow to the transmission.

Modulation (operator-controlled slippage) occurs when the transmission is in gear and an operator slowly depresses the accelerator pedal while discharging agent. Depressing the accelerator pedal controls air pressure bleed-off from the modulating clutch release air chamber through the R-7 modulating valve. This allows clutch spring pressure to gradually overcome the air pressure and apply the clutch. The modulating clutch allows an operator to maneuver the vehicle while continuously pumping water or foam.

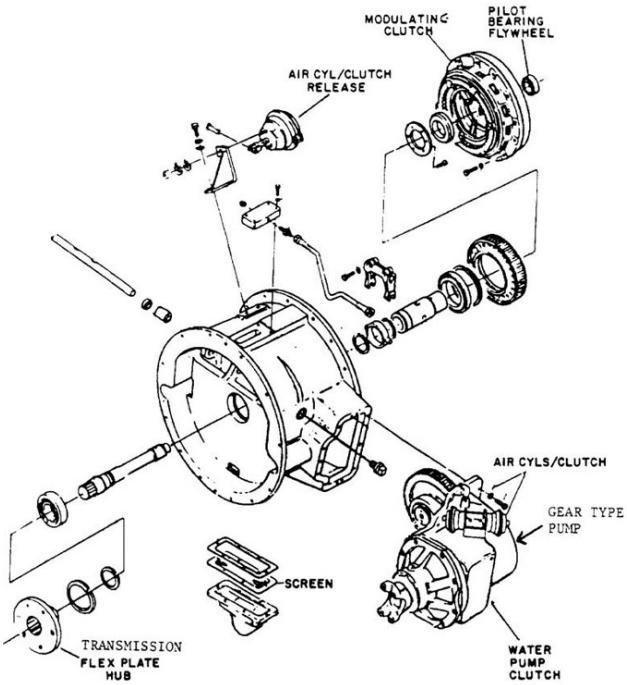

Figure 1–3. Power divider.

Water pump clutch

The water pump clutch is a dry-type, snap over center clutch. The water pump clutch engages and disengages by air pressure. The input side of the water pump clutch is in constant mesh with the engine. When an operator places the agent selector valve lever in the WATER or FOAM position, air pressure (minimum of 90 psi) activates the water pump clutch air chamber causing the clutch to engage. Power from the engine is now available to the water pump, through the power divider.

Power divider lubrication system

Figure 1–4 shows the power divider hydraulic system. A reservoir, located behind the battery compartment, supplies the system with 10-weight (wt.) oil. The oil flows from the reservoir to a gear-type pump mounted to the rear of the water pump clutch wing. The gear-type pump is what lubricates the modulating clutch, center output shaft, and all of the gears within the power divider assembly. The gear-type pump sends the oil to a normally closed flow switch that opens at 2 gallons per minute (gpm) of flow or 4 to10 psi. This flow switch controls the power divider low oil light on the dash. After passing through the flow switch, the oil passes through a filter before going to the power divider. The flow switch and filter assembly are located in the engine compartment to the rear of the engine. Once 10-wt. oil enters the power divider, it lubricates internal components through drilled passages. While in the power divider, the gears and modulating clutch will “splash lubricate” themselves as the oil passes through. The oil then returns

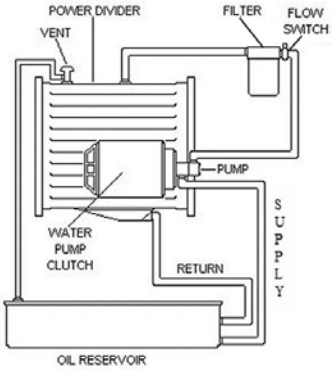

Figure 1–4. Power divider hydraulic system.

under gravity to the sump (bottom of the power divider). In the sump of the power divider, there is a filter screen to collect large debris before the oil returns to the reservoir.

Transmission

The P-19 transmission provides five speeds forward and one reverse. The transmission shifts into and out of first range manually by the operator. The remaining ranges automatically upshift and downshift. An integral torque converter transmits power from the power divider to the transmission gearing. From the transmission, power leaves through driveline components into the nose box.

Nose box

Mounted on the front of the front axle is the nose box. The nose box functions like a transfer case to transmit torque downward to the front axles. Here it drives both the front axles and a drive-through shaft for the rear axle. The nose box features an interaxle differential and locking clutch to allow for different axle speeds and the ability to lock both axles together.

Front and rear axles

The full-floating front and rear axles utilize a controlled traction feature. This provides better traction in soft terrain or slippery conditions. The controlled traction feature consists of a clutch pack. This clutch pack applies when an operator engages the differential lock switch. When *engaged*, the controlled traction differential limits the differential action between the two axle shafts. When *disengaged* you restore full differential capability for normal steering control, under normal road conditions. The controlled traction differential only limits differential action. It does not lock the differential.

002. Dispensing system

Figure 1–5 shows the P-19 dispensing system. This dispensing system is self-sufficient and capable of selectively delivering either water or a mixture of water and foam (called agent) from all discharge points. The components we discuss in this lesson are water and foam tanks, system piping, foam proportioning system, agent selection valve, water and priming pumps, and pressure and pilot relief valves. Additionally, we will discuss the roof turret, bumper turret, and the handline reel assembly.

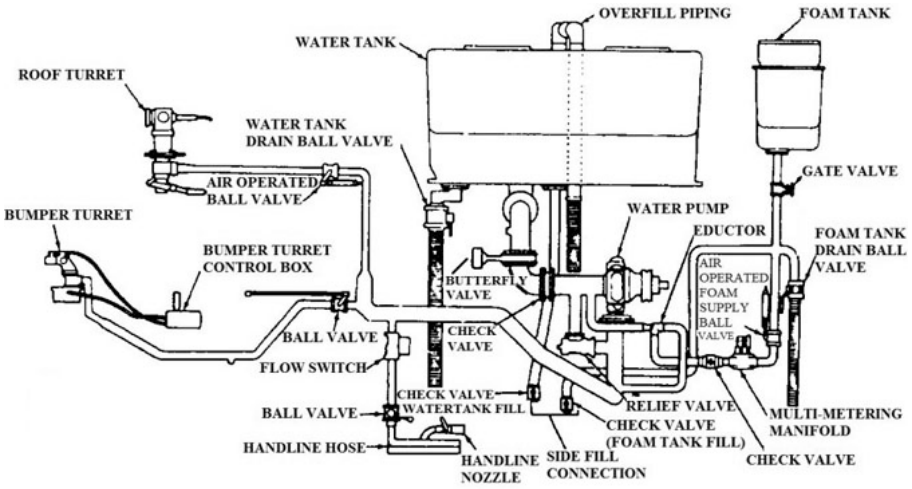

Figure 1–5. P–19 firefighting dispensing system.

Water tank

The water tank on the P-19 is made of fiberglass and has a capacity of 1,000 gallons. A three-point, pivot-mounted subframe supports the tank and relieves twisting forces on the assembly during off-highway operation. The water tank has full section baffles for unrestricted water passage and access

to any portion of the tank for cleaning and inspection. You can fill the water tank from the top hatches or bottom fill connections. The bottom fill parts have standard hose connections. A one-way check valve located in the bottom fill piping prevents water from spilling out. On the cab dash are water tank level and foam tank level gauges.

CAUTION: Before filling the tank from overhead, ensure all drain valves are closed and the strainer basket is in place and clean. Also, when filling the water tank from a hydrant or another water source, be sure to open the water tank's top fill hatch while pressure filling from the side of the truck or damage can result.

Foam tank

Also made of fiberglass, the foam tank has a capacity of 130 gallons and is directly behind the water tank. Operators can fill the foam tank from bulk supply by a hose connected to a transfer pump. However, filling the foam tank usually takes place from the top. The foam tank filler box contains a strainer screen and incorporates four can-piercing knives to expedite the filling procedures.

System piping

The dispensing system uses piping to carry water and foam to each discharge point. All piping in contact with water or foam is stainless steel, bronze, or brass. In some areas, the system piping has flexible hose, due to movement between parts. To maintain a set operating pressure in the system piping, the system uses a pressure relief valve, with bypass pipe. Located within the system piping is the foam proportioning system.

Foam proportioning system

The proportioning system includes a *multimetering manifold* and *eductor*. Figure 1–6 illustrates these two components. The multimetering manifold delivers foam concentrate into the water system at the correct percentage for the roof turret, bumper turret, or handline operation. The multimetering manifold delivers foam concentrate using three orifices controlled by air valves. The manifold comes equipped with two interchangeable orifice plates capable of delivering three or six percent foam concentrate. When either the turrets or the handline discharge valves opens, the pertinent air valve opens and allows the correct percentage of foam to flow (fig. 1–7). The foam flows through the orifice opening within the manifold and out to the eductor. Here, at the eductor, the foam and water are mixed. Then, the mixture flows to the water pump. This type of proportioning system produces a high degree of accuracy at all foam discharge rates. You can manually override each orifice, if air cylinder fails to operate, to provide necessary foam concentrate to various discharge points.

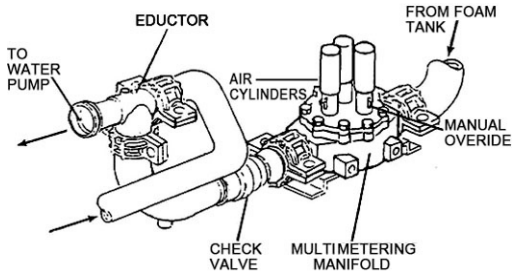

Figure 1–6. Foam proportioning system.

NOTE: When a replacement multimetering manifold is ordered, replacement manifolds may come with six cylinder valves. However, only three of these cylinder valves are used.

Agent selection valve

Mounted on the right-hand side of the dash is the agent selection valve. Operators use this valve to select the agent, either foam or water. When operating the vehicle in CRASH mode, the engine speed *must be at idle before shifting the agent selection valve*. Engaging the valve at engine speeds above

idle has a detrimental effect on the life of clutches, drivelines, and pumps. However, you can switch the agent selection valve from the water position to the foam position when the engine is at 2,100 revolutions per minute (rpm), because the pump is already engaged and dispensing agent.

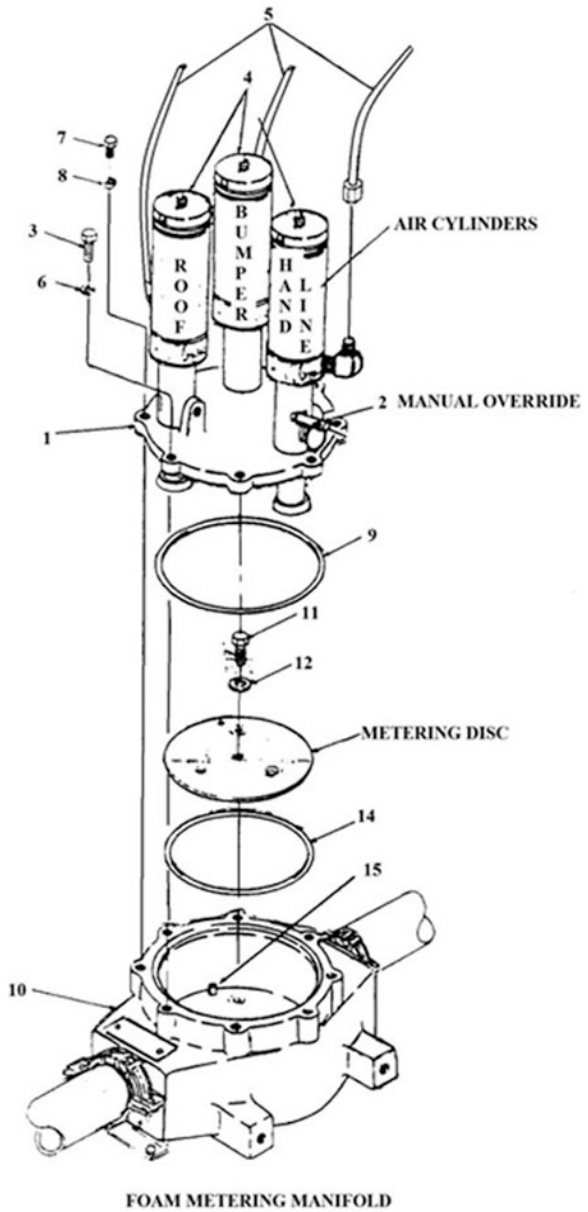

Figure 1–7. Foam metering manifold

Water pump

Figure 1–8 is an illustration of the P-19 water pump. *All* variants use a single-stage, centrifugal-type pump. The P-19 and P-19B (United States Air Force [USAF] variants) utilize a Waterous water pump which is rated at 1,000 gpm, while the P-19A (United States Marine Corps [USMC] variant) has a Hale water pump with a rating of 950 gpm. Both pumps operate at 240 psi at 2100 rpm. The power divider provides the direct drive arrangements to engage the water pump, through the water pump clutch. An oil supply, in the pump bearing housing, provides water pump lubrication. The water pump engages whenever the agent selection valve on the dash is in the WATER or FOAM position.

WARNING! Remember, engaging the agent selector valve in either WATER or FOAM position at engine speeds above idle has a detrimental effect on the life of clutches, drivetrain components, and pumps.

Water-priming pump

The P-19A/B model trucks use a priming pump because the centrifugal-type pump cannot create its own vacuum. Because the water pump is unable to create a vacuum, you must prime the water pump when operating the pump from a draft. The priming pump system, shown in figure 1–9, uses water to displace air in the suction lines and portions of the pump.

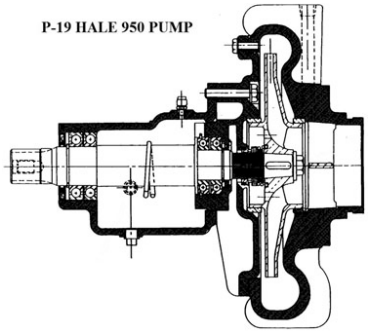

Figure 1–8. P-19 water pump.

Priming is *not required* for pumping from a hydrant or in a relay (one pump to another). In this situation, inlet water pressure is high enough to force air out of the suction lines and pump. A discharge line must be open to permit the air to escape. If you temporarily stop pumping, and no air enters the pump, re-priming is not necessary.

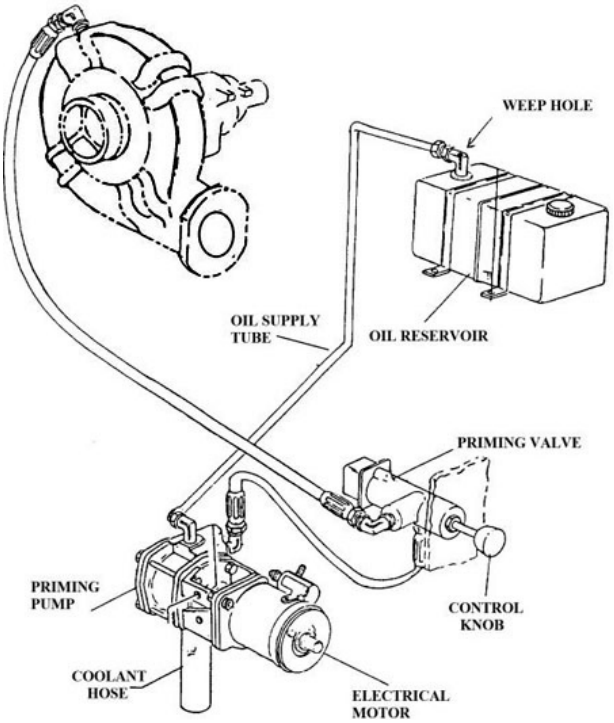

Figure 1–9. Priming pump system.

The priming pump gets its initial seal from oil. The oil reservoir is located in the battery compartment. Attached to the reservoir is an oil supply line that runs to the priming pump. This line has a brass fitting at the reservoir with a small weep hole on top. You must ensure this weep hole stays free of any obstructions; otherwise, the oil and water may premix and will not provide a proper seal for the priming pump. An electric motor (similar to a starting motor) drives the priming pump. The priming control is on the structural panel (fig. 1–10). Hearing a definite change in sound of the priming pump, and checking the water pump pressure gauge on the structural panel, indicates when priming is complete. In addition, when priming is complete, water-oil mixture flows from the priming pump discharge line underneath the vehicle.

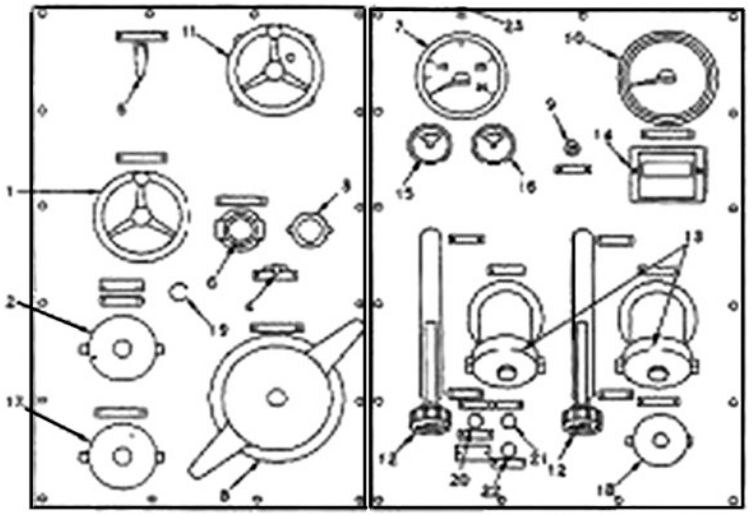

1. Water tank shut off valve hand wheel
2. 2.5 inch water suction connection
3. Priming pump control knob
4. Waterpump engage/disengage valve
5. Relief valve (crash/structural)
6. Engine throttle control knob
7. Engine tachometer
8. 5 inch water suction connection
9. Structural panel control switch
10. Waterpressure gage
11. Relief valve hand wheel
12. Discharge levers
13. 2.5 inch water discharge connections
14. Digital flow meter
15. Engine oil pressure guage
16. Engine water discharge connections
17. Water fill connection
18. Foam fill connection
19. Suction inlet valve
20. Water drain
21. Foam drain
22. Water drain
23. Panel light switch

Figure 1–10. Structural panel.

Pressure relief valve

The pressure relief valve is located in the piping on the outlet side of the water pump (fig. 1–11). The pressure relief valve operates in CRASH and STRUCTURAL mode. The *pilot relief valve* controls the operation of the pressure relief valve. In CRASH mode operation, the pressure relief valve bypasses excess agent pressure back to the water pump. Equal pressure on both ends of the pressure relief valve piston holds the dispensing system pressure steady while dispensing. When you shut a turret off, the system pressure increases. Because of system pressure increase, the pilot relief valve bleeds off pressure from behind the pressure relief valve piston. This allows the pressure relief valve to open and bypass the excess water pressure back to the water pump.

Pilot relief valve

The P-19 has only one pilot valve, while the P-19A/B have two valves that operate on both CRASH and STRUCTURAL modes. The pilot relief valve is located in the piping on the outlet side of the water pump. The valve adjusts to maintain system pressure at 240 psi at all times in CRASH mode, the structural pilot valve is set by the firefighters. To increase the system pressure, turn the valve adjustment clockwise. This increases the spring pressure within the pilot relief valve. Turning the valve adjustment counterclockwise decreases system pressure.

NOTE: When adjusting the relief valves in the dispensing system, always reference the applicable technical order (TO).

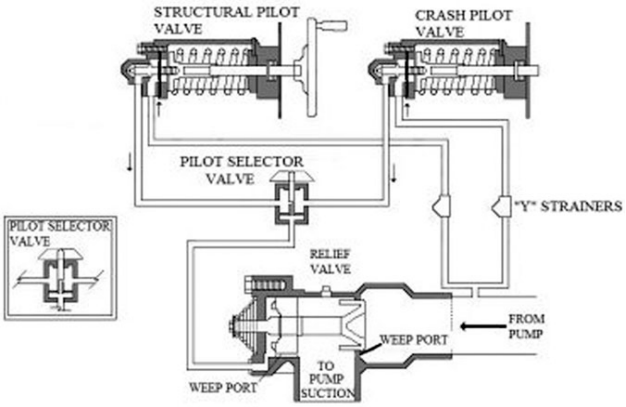

Figure 1–11. Relief valve/pilot valve assembly.

Roof turret

The roof turret, shown in figure 1–12, is a remote, manual-type turret. The roof turret is a non-aspirating, single barrel turret, with an air-operated discharge valve. The discharge capacity of the roof turret is 500 gpm at approximately 225 psi discharge pressure at the pump. The driver, or an individual sitting in the cab below the turret, operates the roof turret. A single handle provides directional control of turret movement in the horizontal and vertical planes. Turret movement corresponds to movements of the control handle. The position of the control handle corresponds to the position of the turret. Pressing a button on the grip end of the directional control handle activates the air-operated turret discharge valve. To stop discharge, press the button again.

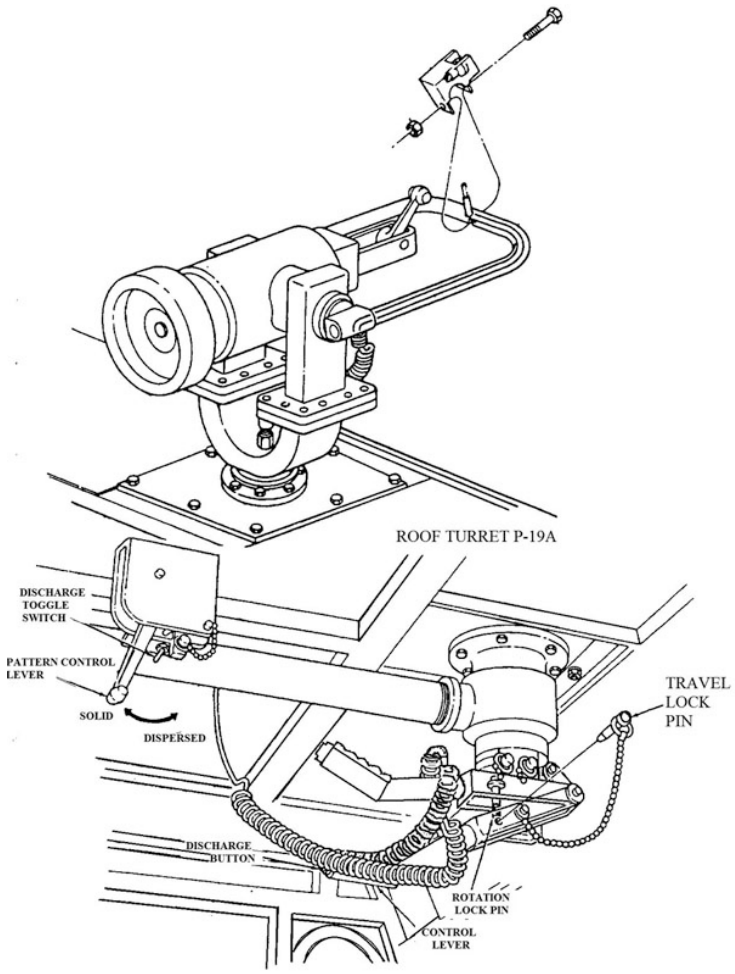

Figure 1–12. Roof turret (P-19 and P-19B).

For the turret discharge valve to operate, the electric toggle switch, located on the ceiling, must be in the ON position. The pattern control lever is located to the right of the turret control column on the interior ceiling. Shown in figure 1–13 are the roof turret travel limits and discharge patterns.

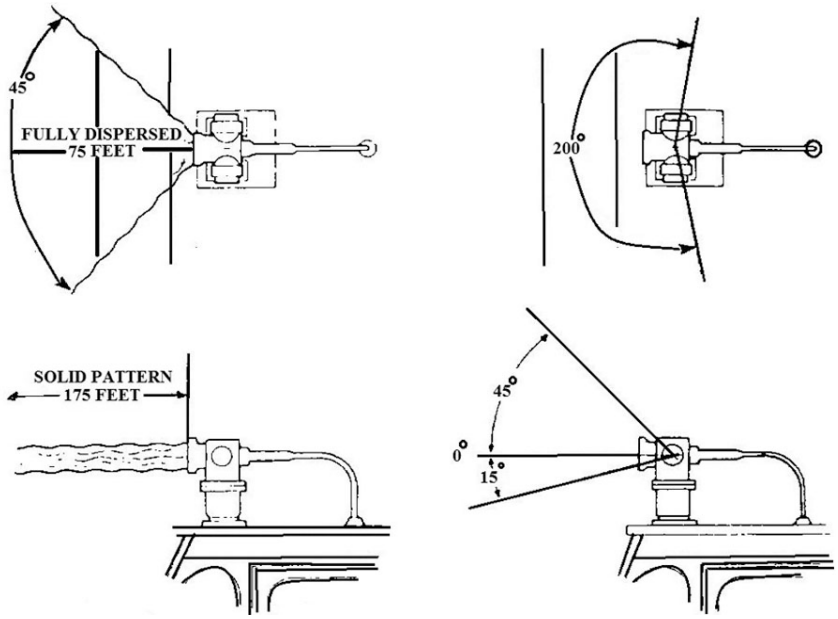

Figure 1–13. Roof turret travel limits.

Bumper turret

Located above the front bumper, in the center, is the bumper turret. The design of the bumper turret allows discharge of water or foam at a rate of 250 gpm at 240 psi. The bumper turret is similar in construction to the roof turret. The bumper turret is a single-nozzle, non-aspirating, constant flow and variable-stream type turret. Directional control is electric over air, operated in both horizontal rotation and elevation. All bumper turret air operational controls are beneath the bumper turret, and all electrical controls are inside the turret control box on the center console. Pattern control is by a control cable and is variable from straight stream to a fully dispersed pattern. You operate the bumper turret discharge valve from within the cab. Figure 1–14 shows the bumper turret's travel limits and discharge pattern.

NOTE: You must elevate the bumper turret to achieve distance.

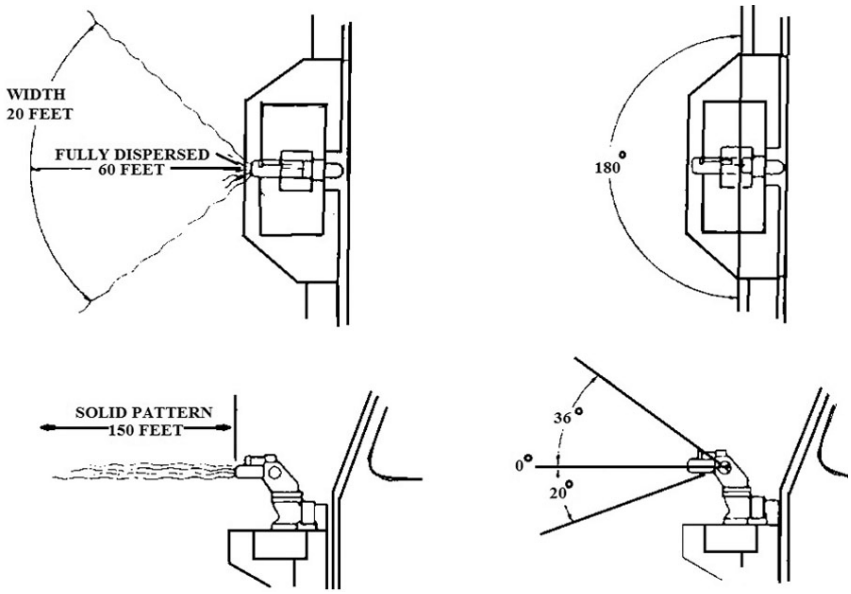

Figure 1–14. Bumper turret travel limits.

Handline hose reel assembly

The handline installed on the hose reel is a hard hose. The P-19 uses this type of hose because it can pressurize on the hose reel without damage to the reel assembly. As figure 1–15 shows, the handline is on a hose reel assembly in the left front compartment. The handline is 100 feet of 1-inch hose, with a pump discharge pressure of 60 gpm at 100 psi. Operators can wind the hose on the reel either electrically or manually. Before you rewind the handline, first use the blowdown valve to remove the remaining water or foam/water from the hose. This prevents freezing during cold weather conditions and reduces the weight of the hose to take the strain off the electric rewind motor during use. The pistol grip nozzle is non-aspirating, with an infinitely variable pattern ranging from straight stream to a fully dispersed pattern.

NOTE: Reconfiguration of the handline hose reel assembly is a field-level option to permit the removal of the hose reel and hard hose for substitution with 150 feet of 1 to 3¼-inch preconnected soft hose. Refer to the appropriate TO for this reconfiguration.

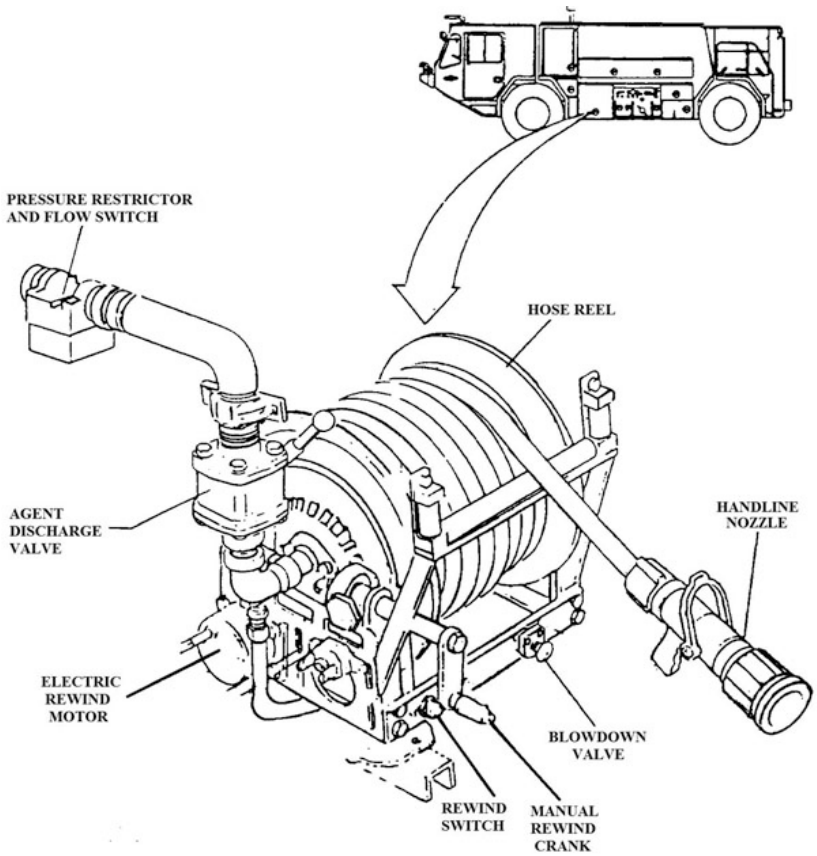

Figure 1–15. Handline hose reel assembly.

003. Electrical system

The purpose of this lesson is to provide only general information about the P-19 electrical system. Always reference the TO before troubleshooting electrical system components and use standard automotive electrical theories.

The P-19 utilizes a 24-volt electrical system. A 100-ampere (amp) alternator supplies the current to maintain the truck's two 24-volt batteries. Automatic reset-type circuit breakers protect most major circuits. A master solenoid is located on the left frame rail in the center of the truck. When the master switch on the cab dash is in the OFF position, the master solenoid disconnects power from all vehicle electrical systems *except* for the winterization system.

Two types of external power receptacles are located at the rear of the vehicle. The first type is a 24-volt plug-in receptacle. The receptacle accepts power from an auxiliary power source for jump-starting. The second receptacle is a 110-volt receptacle used to supply power to the battery charger and vehicle electrical system when the engine is not operating.

SAFETY CAUTION: Always disconnect batteries before replacing electrical parts. Disconnect negative cable before disconnecting positive cable. When reconnecting, connect positive cable before connecting negative cable.

004. Winterization system

Because of the diverse geographical locations of Air Force bases, the P-19 must be operational in all climate zones. Keeping equipment operational in cold weather areas is of vital importance. This lesson covers general information about the main winterization system, the water recirculation system, and the operation of the booster heater.

General information

The winterization system's function is to maintain the temperature in the cab, most of the compartments, and the engine. The winterization system, shown in figure 1–16, uses its own ethylene glycol engine coolant heated by the booster heater. Then, circulation pumps circulate coolant through two heat exchangers and six heater cores. Each heater core uses an electric fan to pass air through the heater core, warming the individual compartments. This prevents the pipes from freezing and keeps the truck ready for emergency operations in subfreezing weather. The system draws fuel from the vehicle fuel tank. The vehicle batteries provide electric power. However, if you operate the heater for a long period, you must connect an external power source using an extension cord at the 110 VAC connector at the back of the truck. Connecting the external power source prevents batteries from discharging. Controls for the winterization system are located on the left dash panel.

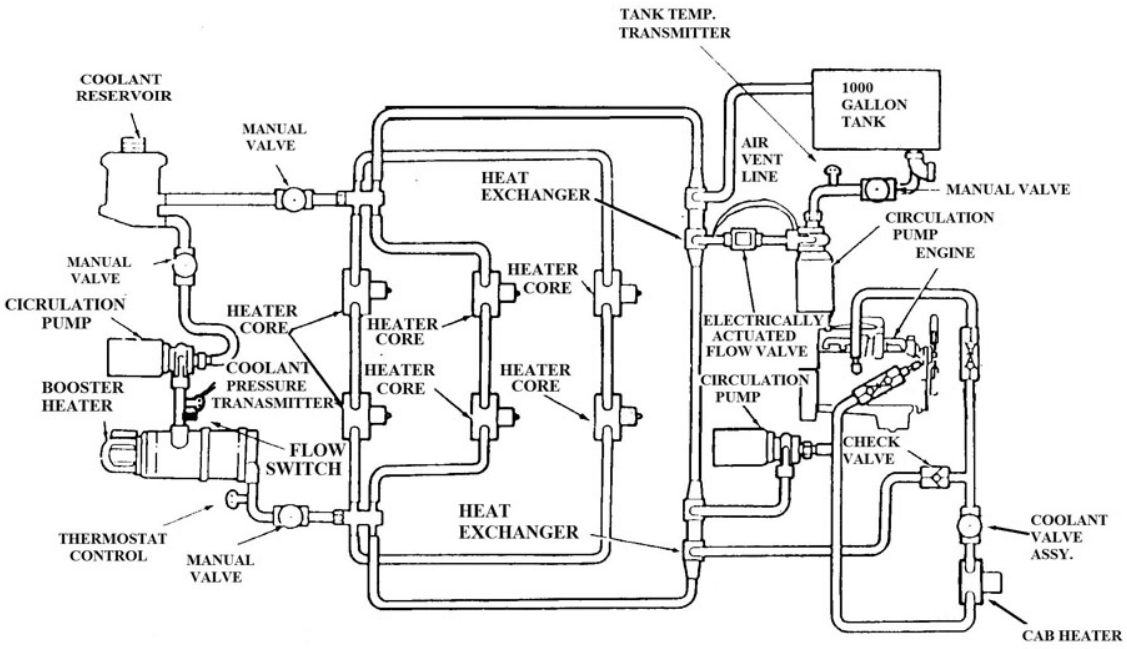

WINTERIZATION SYSTEM

Figure 1–16. Winterization and water recirculating system.

The winterization system consists of three systems—the main system, engine subsystem, and water subsystem. All three of these systems must operate together to provide adequate winterization.

Winterization System	
System	**Operation**
Main system	An electric circulating pump circulates ethylene glycol engine coolant from the reservoir to the booster heater. The booster heater heats the coolant, which circulates through plumbing to the six heater cores and two heat exchangers. Electric fans circulate air over the heater cores to maintain compartment temperatures. This system does not connect to the engine's cooling system.
Engine subsystem	In the engine subsystem, a pump circulates coolant through a heat exchanger located in the right front compartment of the truck. Then, the coolant circulates into the engine and cab heater core. The engine subsystem connects to the engine's cooling system. Check valves protect the engine's cooling system.
Water subsystem	A water recirculating pump circulates water through the heat exchanger located in the booster heater compartment. The water subsystem uses a flow switch, located between the recirculating pump and heat exchanger, to monitor flow. The water recirculating pump prevents freezing of the water in the water tank and piping system by keeping it circulating through the system.

Booster heater operation

To help you understand this section on booster heater operation, reference figure 1–17. Placing the booster heater switch in the ON position energizes relays K1, K2, and K3 to the closed position. Relay K1 remains closed throughout the booster heater operation. Relay K2 energizes the blower motor circuit and remains closed for 2.5 to 3.0 minutes after combustion stops to purge the combustion chamber of unburned fuel and fumes. Relay K3 allows current to flow through the thermostat control to the contacts on relays K2, K3, and K4. After approximately 20 seconds of starting prime, relay K3 opens and relays K4 and K5 close.

Relay K4 energizes the ignition circuit and relay K5. Relay K5 energizes the fuel solenoid and combustion begins at this point. Current flowing through diodes V22 and V24 serve to hold the relays closed. The light from the flame in the combustion chamber decreases the resistance in the photo resistor to less than 200 ohms, allowing more current to flow through relay K4. This opens K4 and de-energizes the ignition circuit. Combustion is sustained in the chamber by the flame. The resistance of the photo resistor decreases with light and increases without light.

During normal operation, the booster heater operates until the coolant reaches 172 degrees Fahrenheit (°F). Then the thermostat control opens, de-energizing relay K5. As soon as relay K5 opens, the fuel solenoid is de-energized and combustion stops. At this time, relay K3 once again closes and remains closed until the thermostat control closes (162°F) to start the combustion process over again. The blower motor remains energized for 2.5 to 3.0 minutes, purging the combustion chamber. The coolant pump remains energized as long as the booster heater switch is in the ON position.

Should the thermostat control not open at 172°F; the high-limit temperature switch opens at 195°F to de-energize the fuel solenoid and stop the combustion process. The over-temperature fuse opens from excessive heat at 240°F if the high-limit switch fails to open. The over-temperature fuse also de-energizes the fuel solenoid, stopping the combustion process.

If the combustion process does not begin within 20 seconds after relays K4 and K5 close, then relays K4 and K5 will reopen, de-energizing the ignition and fuel solenoid circuits and energizing the warning circuit.

The control unit uses transistors, resistors, and capacitors to control the operation of the booster heater. It is not a repairable item and if found to be defective, simply remove and replace the unit. Refer to TO 36A12–8–17–2, Maintenance and Overhaul—Truck, Aircraft Crash and Structural

Firefighting USAF Type A/S32P–19, NSN 4210 01 137–9944 USMC Type A/S32P–19A NSN 4210 01 137 9943 USAF Type A/S32P–19B NSN 4210 01 137 9943 (OSHKO Truck Corporation), for proper troubleshooting procedures.

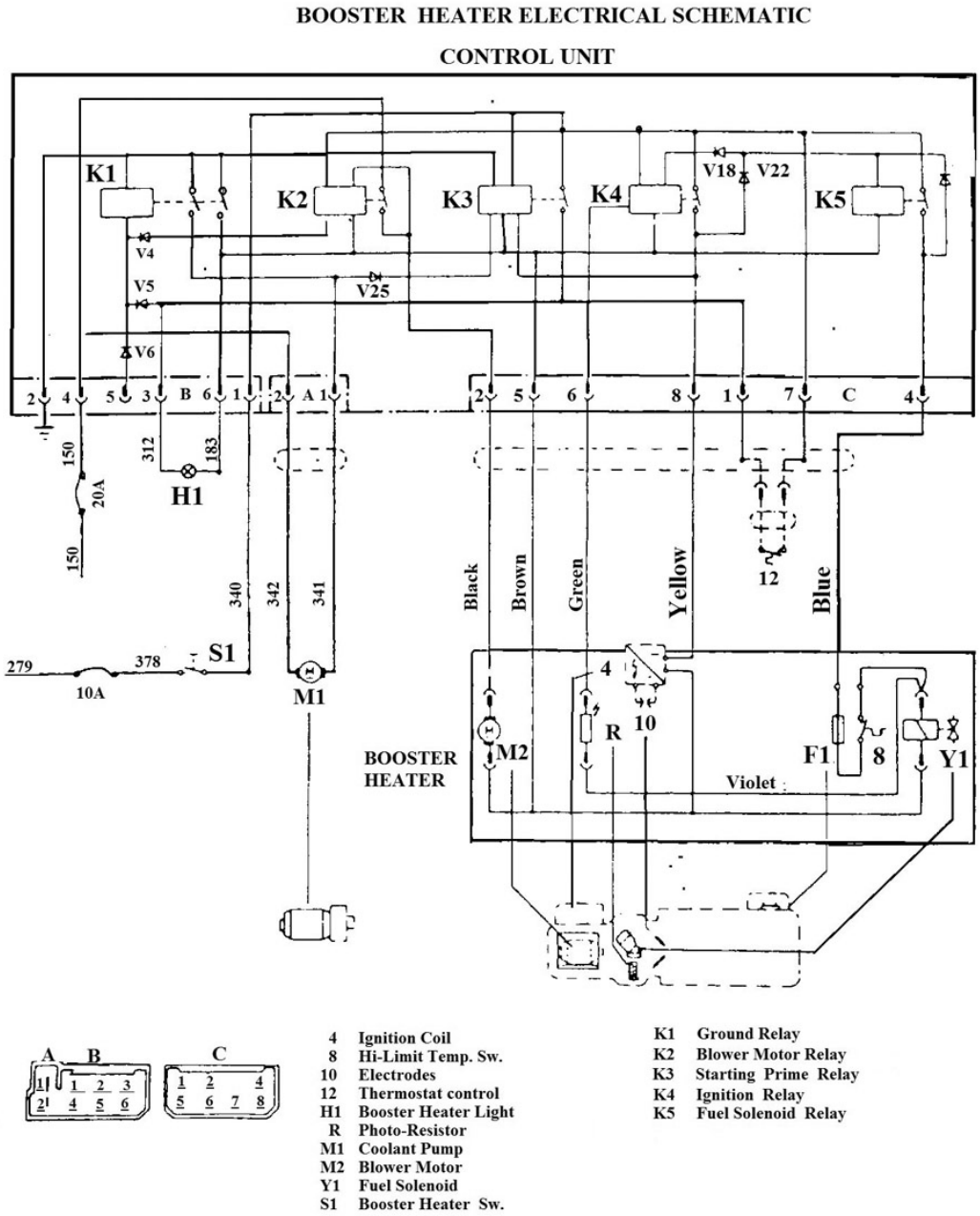

Figure 1–17. Booster heater electrical schematic.

005. Air system

The air system on the P-19 consists of an engine-driven compressor and air pressure storage tanks. These components, along with the necessary valves and plumbing, supply and control the various air-operated devices on the truck. Although the air system uses numerous components, you should be familiar with the operation of four unique air valves. The unique air valves used in the P-19 air system include a three-way control valve, air double-check valves, inversion valve, and a sequence valve.

Three-way control valve

The three-way control valve, shown in figure 1–18, is on the right-hand side of the dash and commonly referred to as the *agent selection valve* on the P-19. The valve is manually operated, and it has a WATER, an OFF, and a FOAM position.

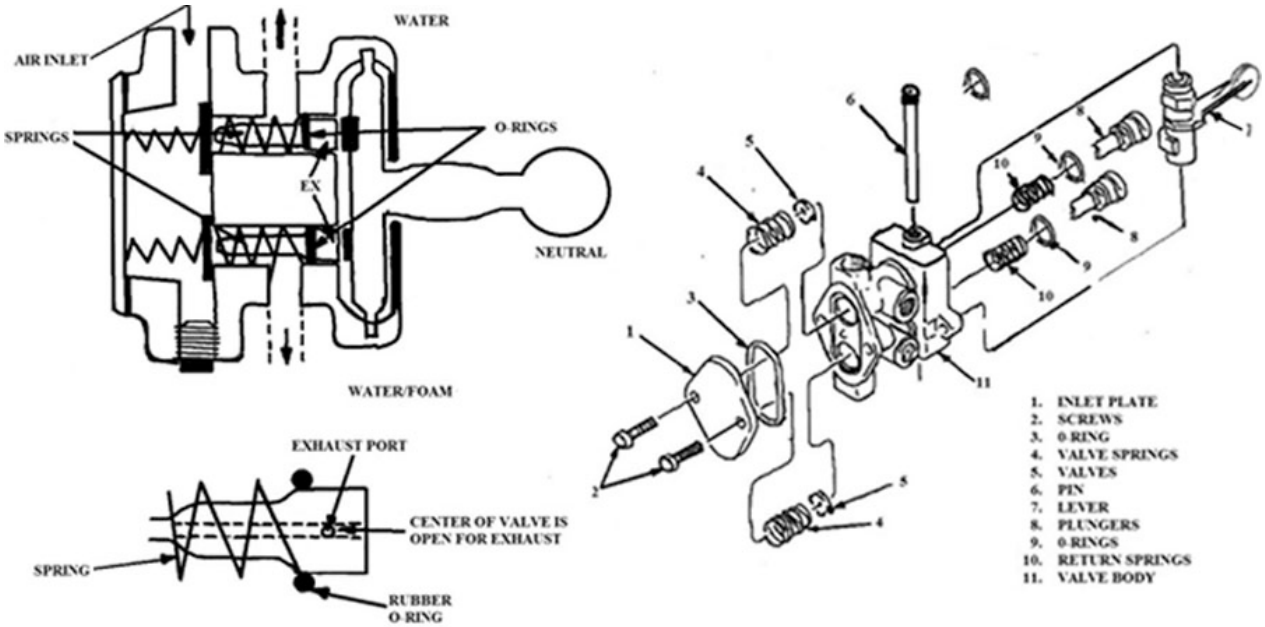

Figure 1–18. Three-way control valve.

Air double-check valve

There are several air double-check valves used in the P-19 air pressure system. The purpose of these valves is to direct air pressure. The double-check valve (fig. 1–19) automatically directs the flow of air pressure into a common line from either of two lines. When air pressure is applied to one end of the double-check valve, the shuttle valve slides in the shuttle guide to close off the outlet on the opposite side. Applied pressure to the opposite end slides the shuttle valve in the other direction.

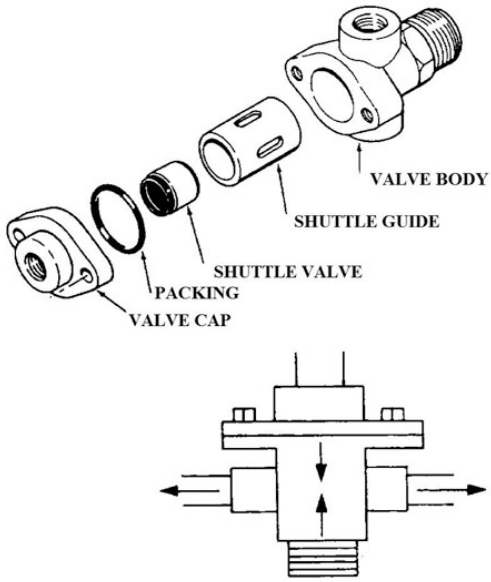

Figure 1–19. Air double-check valve.

Inversion valve

Figure 1–20 shows an inversion valve. The inversion valve controls air pressure to an actuating device, such as an air cylinder. When the inversion valve is in the NORMAL (OPEN) position, air pressure from another source enters the valve at the bottom, passes around the seat and flows to an actuating device. When the inversion valve is in the CONTROLLED position, air pressure from a control device lifts the internal piston. This action closes the seat in the bottom of the valve and allows the air in the line to exhaust out the top of the valve (fig. 1–21). When this occurs, the actuating device shifts in the opposite direction. As the controlling device is shifted back to the OFF position, the spring in the top of the inversion valve forces the piston back down to open the seat at the bottom and the valve is in its normal position.

Sequence valve

Figure 1–22 illustrates the operation of the sequence valve. There is one sequence valve on each P-19 model, which has the same purpose as an inversion valve but operates in an opposite manner. When a sequence valve is in the NORMAL position (CLOSED), spring pressure below the internal piston lifts the piston allowing the valve seat to close and block incoming air. When the sequence valve is in the CONTROLLED position, air pressure from a control device pushes down the internal piston forcing the valve seat open allowing air to enter the valve at the bottom. This air passes around the valve seat and flows to an actuating device.

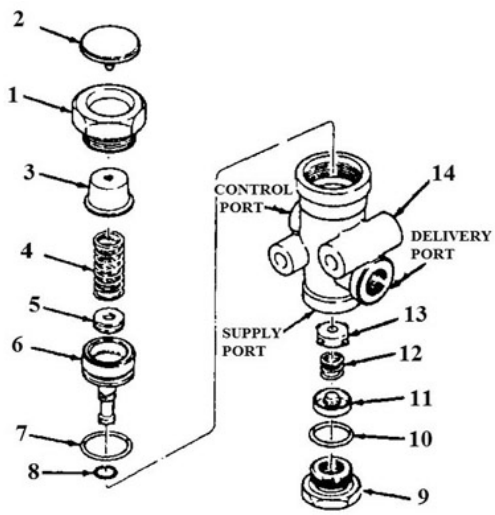

1. EXHAUST NUT
2. EXHAUST DIAPHRAGM
3. DIAPHRAGM RETAINER
4. PISTON SPRING
5. SHIM
6. PISTON
7. O-RING
8. O-RING
9. CUP NUT
10. O-RING
11. VALVE STOP
12. VALVE SPING
13. VALVE
14. VALVE BODY

Figure 1–20. Inversion valve.

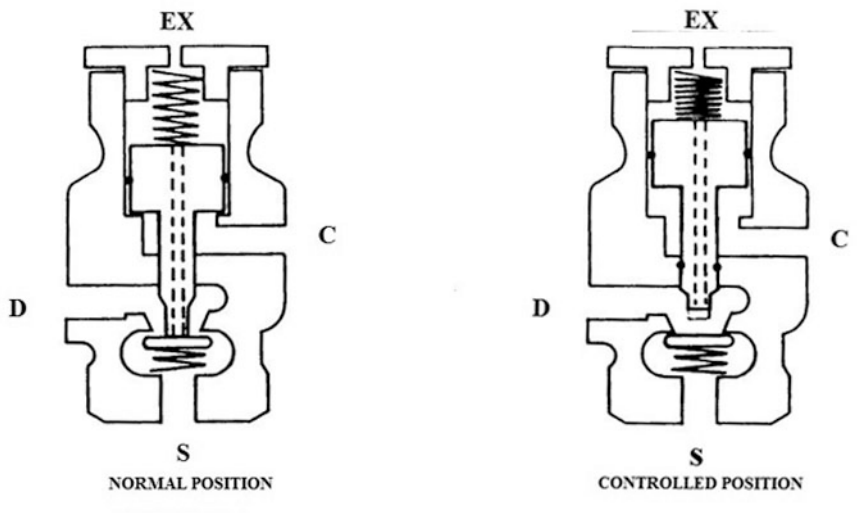

Figure 1–21. Inversion valve operation.

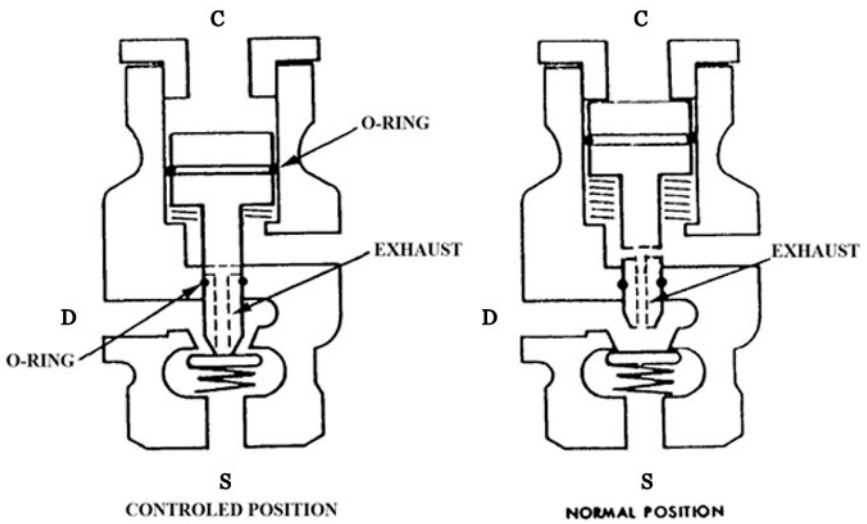

Figure 1–22. Sequence valve.

Self-Test Questions

After you complete these questions, you may check your answers at the end of the unit.

001. Drivetrain

1. What drivetrain component on the P-19 provides power for the main drive and firefighting system?

2. Where is the power divider mounted?

3. What component attaches to the power divider and houses the water pump clutch?

4. What does the modulating clutch on the P-19 provide?

5. What activates the modulating clutch air release chamber after placing the agent selector valve in the WATER or FOAM position?

6. What type of clutch is the water pump clutch?

7. What component is located behind the battery compartment and supplies the power divider lubrication system with 10-wt. oil?

8. What controls the power divider low oil light on the dash?

9. What is the purpose of the filter screen located in the sump of the power divider?

10. How many speeds does the P-19 transmission provide?

11. How does the nose box mounted on the front of the P-19 front axle function?

12. What feature does the P-19 front and rear axle use? Why?

002. Dispensing system

1. The P-19 water tank is made of what material?

2. What is the capacity of the foam tank?

3. What components in the system piping maintain a set operating pressure?

4. Which two components make up the foam proportioning system?

5. What is the purpose of the agent selection valve?

6. What type of water pump does the P-19 dispensing system use?

7. When does the water pump engage?

8. Why does the P-19A/B use a priming pump?

9. Where is the pressure relief valve located?

10. What is the discharge capacity of the P-19 roof turret?

11. What is the discharge capacity of the P-19 bumper turret?

12. What type of hose does the handline hose reel assembly use?

003. Electrical system

1. What type of electrical system does the P-19 use?

2. What type of circuit breaker protects most major circuits?

3. What should you do before replacing electrical components?

004. Winterization system

1. What is the purpose of the P-19 winterization system?

2. What type of coolant is used in the winterization system?

3. How many systems comprise the P-19 winterization system? Name them.

4. During normal operation, what temperature will the coolant reach before combustion in the booster heater stops?

5. What component uses transistors, resistors, and capacitors to control the operation of the booster heater?

005. Air system

1. By what name is the three-way control valve commonly referred?

2. What is the purpose of the air double-check valve?

3. What is the purpose of the inversion valve?

4. What position is the inversion valve in when air pressure from a control device lifts the internal piston?

5. Which valve on the P-19 operates in an opposite manner of the inversion valve?

1–2. P-19 Firefighting Truck Maintenance

In the previous section, you learned about the fundamental systems of the P-19 firefighting truck. The knowledge you now have about each system should give you confidence in maintaining the P-19. Maintenance on the P-19 consists of inspections, troubleshooting problems, and component repair or replacement. The following lessons cover some common maintenance actions that you need to know. ALWAYS reference the appropriate TO when performing repairs.

006. Troubleshooting the power divider

The power divider is the key to the P-19 dispensing system. The reason it's the key is the fact it allows you to engage the firefighting system while driving the truck, called "pump and roll." This lesson covers general operation and some troubleshooting procedures on the power divider. Always reference the TO for up-to-date troubleshooting information.

Modulating clutch

When operating the P-19 properly, the modulating clutch should have a long service life. However, if there is a loss of power to the vehicle's transmission, check to see that the engine is providing full

power. If the engine is operating properly, follow this procedure to troubleshoot the modulating clutch:

1. Build up full-system air pressure.
2. Place the agent selector valve in the OFF position and turn the engine off.
3. Loosen *slightly* the air line at the modulating clutch release chamber. There should be no air pressure present at this time. If air pressure is present, the agent selector valve is defective and requires repair or replacement.

If no air pressure is present at the modulating clutch release chamber, check the clutch linkage free travel. To do this, grasp the lever at the top and pull it forward.

NOTE: You must apply sufficient force to overcome the spring pressure from the clutch air chamber.

Measure the amount of free travel. Free travel at the clevis pin should measure between $^{5}/_{16}$ and $^{3}/_{8}$ inch. If the free travel is not within the specified amount, turn the air chamber clevis either OUT to decrease free travel or IN to increase free travel.

If no air pressure is present and the free travel adjustment is correct, remove the clutch and check the disc for wear and the pressure plate for proper tension. To do this, remove the complete power divider assembly. Be sure you use the appropriate technical data when removing the power divider assembly and performing any maintenance.

With the power divider removed, disassemble the modulating clutch assembly for inspection. Be sure to clamp the assembly down before loosening the pressure plate half bolts. This helps relieve spring tension. Next, alternate loosening the half bolts. This prevents the halves from becoming warped. With all the parts disassembled, inspect the inner and outer clutch discs for warpage, dishing, and wear. If you find the facings worn to the bottom of the groove pattern, replace the inner discs. Replace the outer discs if they are warped, dished, or worn. Check the pressure plate springs on a spring compression tester to ensure they have the proper tension at the appropriate height. Replace the springs if they are weak.

Servicing the modulating clutch ensures proper lubrication is available.

Modulating clutch oil pump

The modulating clutch oil pump is the key to extending the power divider’s modulating clutch life. A gear-type positive-displacement pump delivers approximately 3 gpm whenever the drive engine is running. A red warning light on the cab dash should come on before you start the truck. The light should go out after a flow switch detects the proper oil flow. If the red warning light does not come on at all, check to see if the bulb or the flow switch is defective. To do this, use a small jumper wire and connect the flow switch terminals to ground. Then turn on the ignition switch. The light should illuminate. If the light comes on, it indicates the flow switch is defective. Replacing the switch solves this problem. This flow switch is located just before the power divider filter housing, in the engine compartment.

If the red warning light stays on while the engine is running, there is not enough oil flow for clutch lubrication. To check, install a pressure gauge on the inlet side of the power divider’s oil filter housing. The pressure should read about 30 psi at 2,100 rpm; at idle speed, it should read a minimum of 4 to 10 psi. If these pressures are extremely low, check the screen in the bottom of the power divider case for cleanliness. If the screen is clean, it indicates the lubrication pump is defective and requires replacement.

Servicing of the power divider lubrication system consists of keeping lubrication oil at the proper level and changing the oil and filter at prescribed intervals.

Water pump clutch

The water pump clutch is a 7-inch, dry-type, multidisc clutch pack (fig.1–23). A common malfunction of this clutch is slippage. Low or fluctuating water pump pressure is a prime indication of clutch slippage. If slippage is apparent, first check to make sure you have sufficient air pressure (90 psi or higher) to shift the clutch. If you have enough air pressure, check the clearance between the stop screws and the air chamber mount bracket (fig. 1–24). To do this, completely drain vehicle air system.

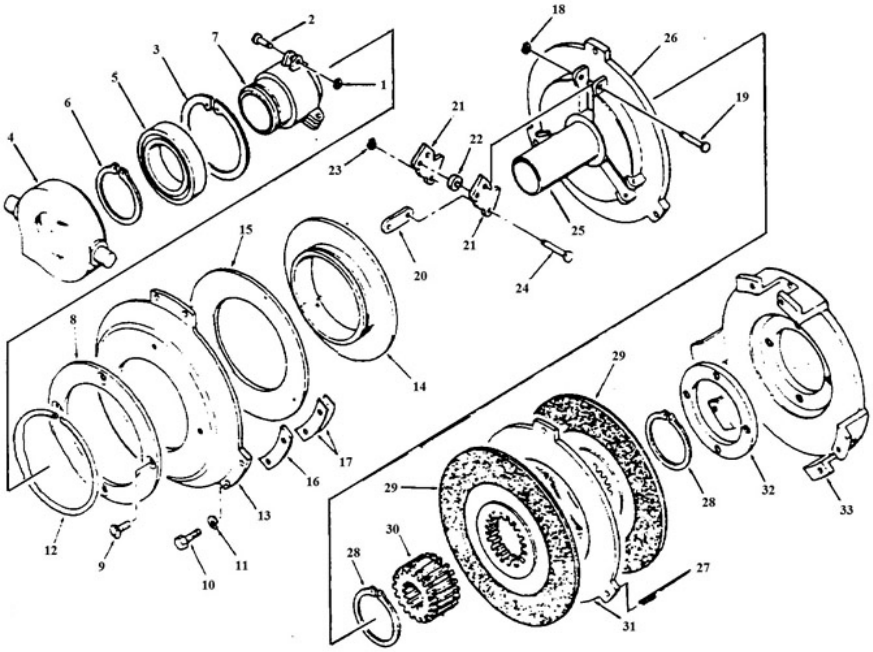

1. Retaining ring
2. Pin
3. Retaining ring
4. Carrier
5. Bearing
6. Retaining ring
7. Sleeve
8. Plate
9. Screw and washer
10. Screw
11. Lockwasher
12. Retaining ring
13. Plate
14. Retainer
15. Washer
16. Laminated shim
17. Brass shim
18. Retaining ring
19. Pin
20. Link
21. Lever
22. Roller
23. Retaining ring
24. Pin
25. Tube
26. Plate
27. Spring
28. Retaining ring
29. Driven member
30. Spur gear
31. Plate
32. Ring
33. Body

Figure 1–23. Water pump clutch.

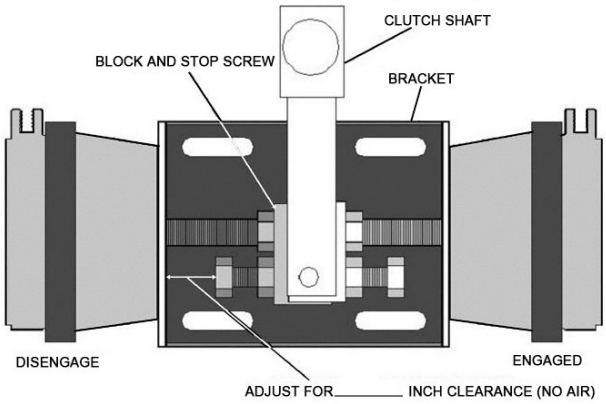

Figure 1–24. Water pump clutch engagement assembly.

After draining the air system, turn both stop screws completely into the block. Next, observe the clutch shaft components as you snap the clutch to the engaged and disengaged positions. The clutch shaft components should not contact the air chambers or the mount bracket. If there is contact, loosen the mount bracket bolts and reposition the bracket. You may also have to adjust the air chamber push rod into the block. When you complete these adjustments, engage the clutch and keep a slight pressure against the release bearing and yoke (not shown in fig. 1–23).

Now, back out the stop screw against the mount bracket just enough to relieve the pressure from against the release bearing. Lock the stop screw into place. Next, back out the opposite stop screw until the head is 0.84 inch from the mount bracket and lock the screw into position. With these adjustments, the clutch should be fully engaged or disengaged and there should be $^1/_8$ to $^1/_4$ inch of free travel on the release bearing.

If the clutch still slips after these adjustments are completed, you need to troubleshoot further. Again, completely drain the air system. Then place the snap over center tool over the clutch engagement shaft box. Place a torque wrench on the tool and measure the torque required to snap the clutch over center. It should take a minimum of 500 pounds—approximately 56 foot-pounds on the torque wrench. If the clutch snaps over center less than 500 pounds, adjust or replace the clutch. To adjust or replace the clutch disc, you must remove the clutch pack. Refer to the technical manual for removal procedures.

With the clutch pack removed, you will see shims in three locations between the assembly plate and the body (refer back to fig. 1–23). Mark the location of each set of shims before disassembly. When the assembly is taken apart, inspect the friction discs for wear or warpage. Replace the discs if worn or warped beyond acceptable limits. If the clutch only requires adjustment because of clutch disc wear, remove an equal amount of shims from each location and reassemble the clutch pack. If a hydraulic press or similar unit is available, use it to slowly apply pressure to the clutch unit carrier. Be sure to note the pressure required to snap the clutch over. Again, the required pressure is over 500 pounds. Using the hydraulic press procedure saves time because you can check the adjustment without reinstalling the unit on the vehicle.

Servicing the pump clutch consists of periodically lubricating the release bearings and clutch engagement shafts. In addition, periodic inspection of the air chamber mount brackets for secure mounting is required. These brackets tend to loosen from vibration.

007. Troubleshooting the dispensing system for low pressure

In this lesson, you learn troubleshooting and maintenance actions required to correct problems of low pressure in the dispensing system. We also discuss common causes for low pressure and corrective actions.

Common causes for low pressure

Low-dispensing system water or foam pressure on the P-19 can be caused by any of, but is not limited to, the following malfunctions:

- Improper engine speed.
- Inversion valve malfunction.
- Defective water pump.
- Pilot control valve improperly adjusted.
- Defective or sticking relief valve.

These are only some of the main causes of low system pressure. Always refer to the technical manual for troubleshooting low pressure in the dispensing system.

NOTE: On the P-19 A/B, ensure the pilot selector valve is in the proper position for the mode of operation checked.

Corrective actions

Corrective actions for component malfunctions include adjusting, cleaning, repairing, or replacing defective items. During CRASH mode operation, the engine should be operating steadily at approximately 2,100 rpm. If engine rpm is too low, check the fuel system and Cummins diesel tune-up specifications for the engine. Make necessary repairs if required.

Inversion valve

If the inversion valve is not operating properly, the water pump clutch will not engage as it should. A common malfunction of this valve is leaking of the seat or O-ring. To check the inversion valve, install a test gauge between a shop air line and the control and supply ports of the valve. Slowly raise the air line pressure. The delivery gauge should show the same pressure as the air line up to 40 psi. At 40 psi, the exhaust port should open and release pressure from delivery. No leakage is allowed at the supply port. A small amount of leakage at delivery and exhaust port is allowed. Excessive leakage indicates a faulty inlet valve. You either repair or replace the defective component.

Water pump

Figure 1–25 shows an exploded view of the water pump. The usual indication of a defective water pump is excessive noise or vibration caused by a worn impeller or other internal parts. Remove the water pump if excessive noise or vibration exists.

CAUTION: The P-19 water pump is heavy and awkward to handle. Use extreme care when removing the pump from the framing and the side compartment.

If you decide to repair the pump, you must clean all the internal parts with approved cleaning solvents. After soaking parts in solvent, wash away any deposits by flushing or spraying. Where needed, brush with a soft-bristle brush moistened in solvent. Clean any lime deposits, scale, or corrosion on volute body and impeller with a stiff-bristle brush. Use compressed air to dry all parts except the bearings. The bearings must air dry.

SAFETY NOTE: ALWAYS wear personal protective equipment when using cleaning solvents and compressed air!

WARNING: NEVER USE GASOLINE TO CLEAN PARTS!

Inspect the impeller for worn or broken vanes. If either condition exists, replace the impeller. Inspect all machined surfaces for small nicks or burrs. Remove nicks and burrs by polishing the marred part with crocus cloth. Inspect the mating surface between seal seat and sealing washer. Replace the entire seal assembly if they are scored or the lip of sealing washer is worn off or damaged.

Crash pilot valve

As you recall, the pilot relief valve is adjustable and controls the discharge pressure during CRASH mode operation. When you troubleshoot or adjust this valve, have someone observe the water pressure gauge, or use a discharge pressure gauge while operating the dispensing system in CRASH mode water operation.

The roof turret on the P-19 firefighting vehicle must be open to properly adjust the crash pilot valve. The bumper turret and handline are properly adjusted after adjusting the roof turret to 225 psi. To make an adjustment, insert a handle into the adjusting stem of the valve. Slowly turn the adjusting stem counterclockwise until the relief valve opens and the discharge pressure gauge shows a pressure drop. Now, turn the adjusting stem clockwise until the gauge returns to operating pressure. The relief valve now operates at the pressure set by the control valve.

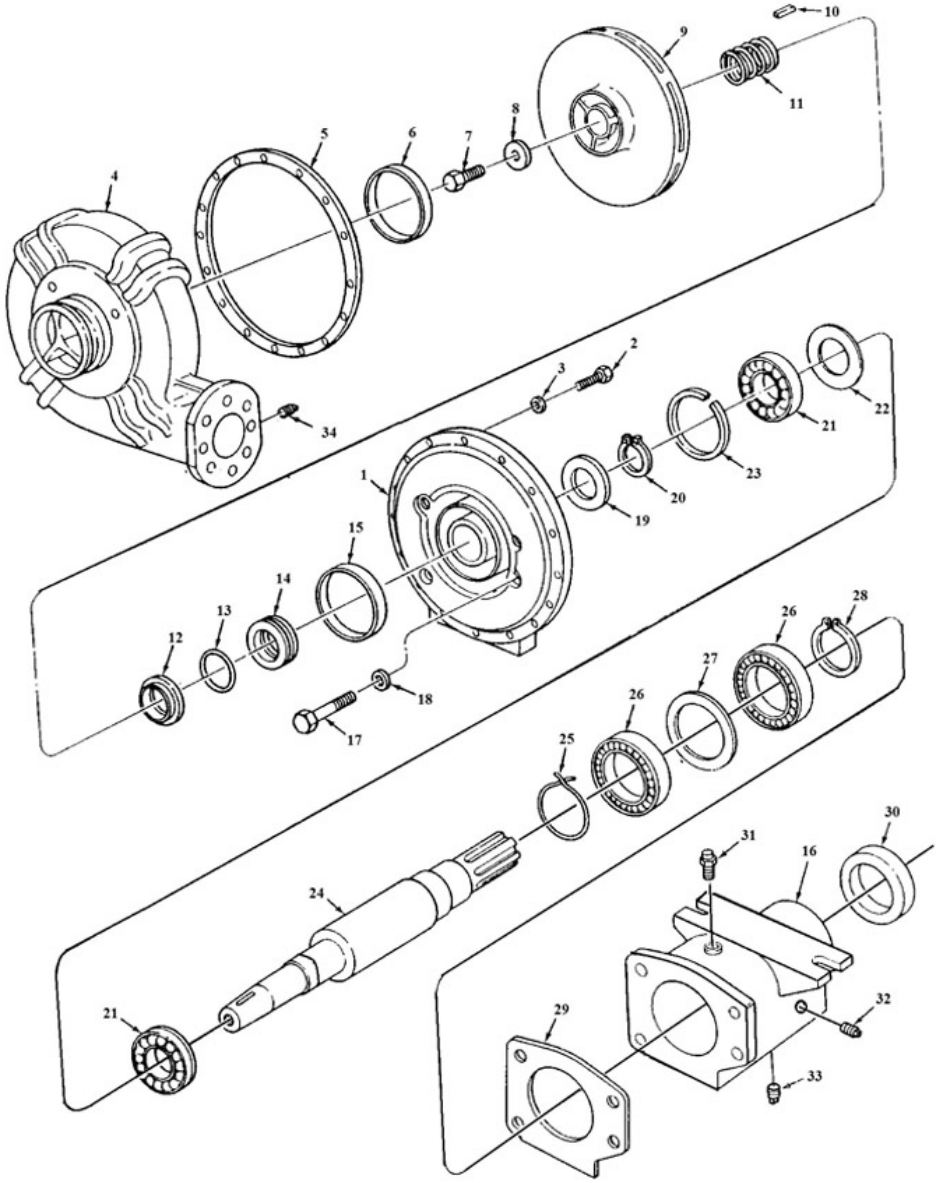

Figure 1–25. Water pump.

If the water pressure does not increase, check for a dirty or restricted orifice. The orifice is located just before the pilot valve. Recheck the system after cleaning a restricted orifice. If the pressure is still low, disassemble the pilot relief valve and inspect the passages in the control body for obstructions. Use a piece of soft wire to clean the passages within the control body.

NOTE: You may adjust the pilot valve at any of the three discharge points and achieve the proper system pressure. For operation, the pump pressure should be set at 240 +/– 5 psi.

Structural pilot valve

The structural pilot relief valves directly control pressure relief during CRASH/STRUCTURE mode of operation. If low pressure still exists after checking the pilot relief valve and orifice, check the pressure relief valve. If the agent system was previously drained, refill the system and open all necessary valves to bring the system to operational status. Insert a punch or pin into the pilot control

valve's shaft to use as a handwheel. Slowly turn the control valve handwheel clockwise as far as possible. This should bring pump pressure up to 150 psi. Once the pump pressure reaches 150 psi, turn the handwheel counterclockwise until the relief valve opens. Turning the handwheel in and out with pump pressure at 150 psi causes the pressure relief valve to operate. If low pressure still exists, adjust the relief valve. To do this, bring the water pump up to the desired operating pressure using the discharge pressure gauge. Turn the handwheel slowly counterclockwise until the relief valve opens and the discharge pressure gauge shows a pressure drop. Then turn the handwheel clockwise until the gauge returns to operating pressure. The relief valve should operate at the set pressure. If the relief valve does not sustain operating pressure, refer to the appropriate technical manual's troubleshooting chart for assistance in deciding whether to repair or replace the defective component.

008. Turret system maintenance

Turret maintenance normally consists of repairing leaks, replacing and adjusting control cables, adjusting uneven turret water or foam discharge patterns, and replacing defective parts.

Roof turret repair

The P-19 and P-19B roof turrets are remote, manual-type turrets aimed and controlled by an operator from within the cab. An electric toggle switch located on the ceiling must be in the ON position for the turret discharge valve to operate. With the switch ON and after the DISCHARGE button has been depressed, water flows through the discharge piping to the roof turret. If either water or foam fails to discharge, the probable cause could be a defective four-way solenoid valve, defective wiring, or defective discharge valve. Figure 1–26 shows an exploded view of the four-way solenoid valve. The valve's purpose is to control air pressure for opening and closing the roof turret discharge valve. To ensure proper reassembly, tag or mark all air lines and wires before removing the four-way solenoid valve. After removing the valve, inspect the valve orifice and all air passages in the body for restrictions. Also, inspect the breather for restrictions and the coil for any frayed or broken wires.

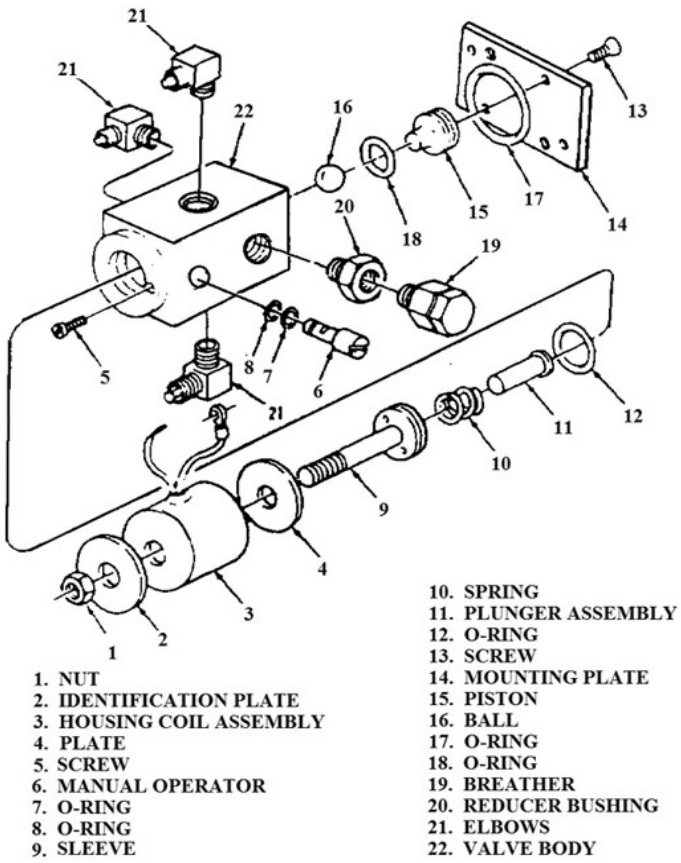

Figure 1–26. Four-way solenoid valve.

The pattern control levers on the P-19 and P-19B are to the right of the roof turret control column on the interior ceiling. The horizontal and elevation positions of the turret control lever correspond to the position of the turret barrel.

NOTE: The ceiling-mounted discharge toggle switch must be in the ON position when using the pushbutton switch on the directional control lever to control roof turret discharge.

If you observe an uneven water or foam discharge pattern in operating the roof turret, it is possible a damaged or dirty turbine or an out-of-adjustment pattern control cable is the problem (fig. 1–27).

When an uneven discharge pattern occurs, inspect and make any necessary adjustments to the pattern cable. If you adjust the pattern control cable, recheck the discharge pattern. The roof turret has a straight stream distance of 175 feet and a dispersed distance of 75 feet. If the pattern is still uneven after you have made all necessary adjustments, use the technical manual instructions to install a new pattern control cable.

NOTE: The turret must be elevated to achieve proper distances.

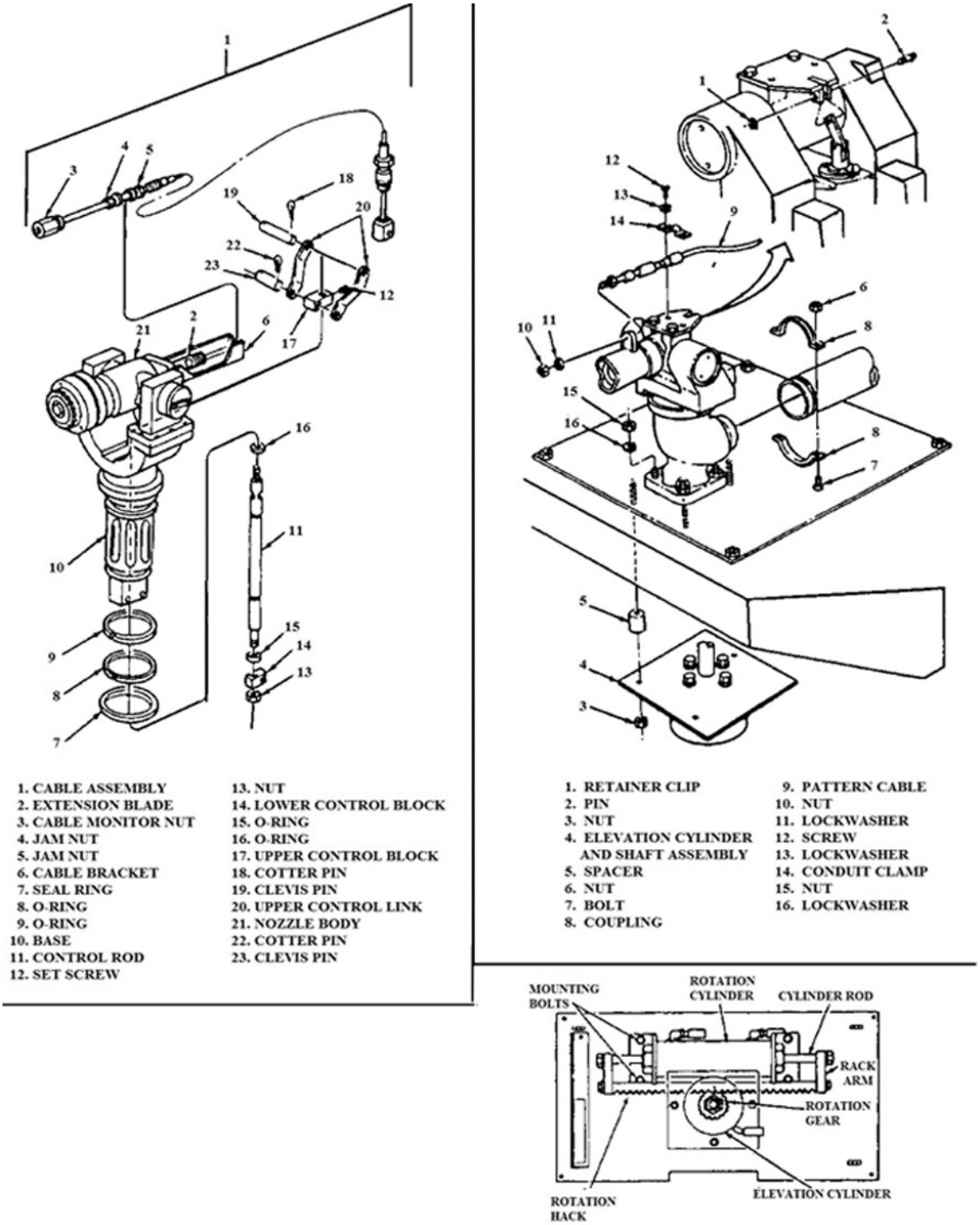

Figure 1–27. Pattern control cable.

If you observe the turret changing discharge pattern by itself from straight stream to wide-angle fog or wide-angle fog to straight stream, the turret has become unbalanced. To correct this problem, add or subtract the 8 – 32 set screws inside the throat of the turret. You can see these set screws at the outlet end of the nozzle around the baffle. If the nozzle moves from straight stream to wide-angle fog, remove one set screw at a time until it maintains a straight stream. If the nozzle moves from wide-angle fog to straight stream, add one set screw at a time until it maintains a wide-angle fog. This condition usually happens if you ever need to change the discharge rate of the turret for some reason, but can also occur if one or more of the set screws work themselves loose.

NOTE. Install the 8–32 set screws in a symmetrical pattern (opposite sides of the throat from each other).

Bumper turret repairs

Bumper turret repairs mostly consist of replacing defective parts. If you disassemble the bumper turret, inspect all plastic parts for cracks and distortion. Replace any part failing inspection. Visually inspect internal parts for scratches, nicks, or burrs. If you find scratches, nicks, or burrs, restore the affected part by polishing with crocus cloth. Each time the turret assembly is disassembled, replace all packing and O-rings

Control cables

The pattern control cable is replaced in much the same manner as the roof turret cable, but it may take more time. Always refer to the appropriate TO. The bumper turret has an additional cable known as the oscillation cable or, sometimes, the rotation cable. It is *mechanically* operated by the rotational cylinder, to move a gear rack and control gear with a permanent magnet attached to it. In the OSCILLATION mode of operation, the magnet controls one normally closed and one normally open limit switch (fig. 1–28). The cable, by itself, does not rotate the bumper turret in either the MANUAL or the OSCILLATION mode of operation (fig. 1–29).

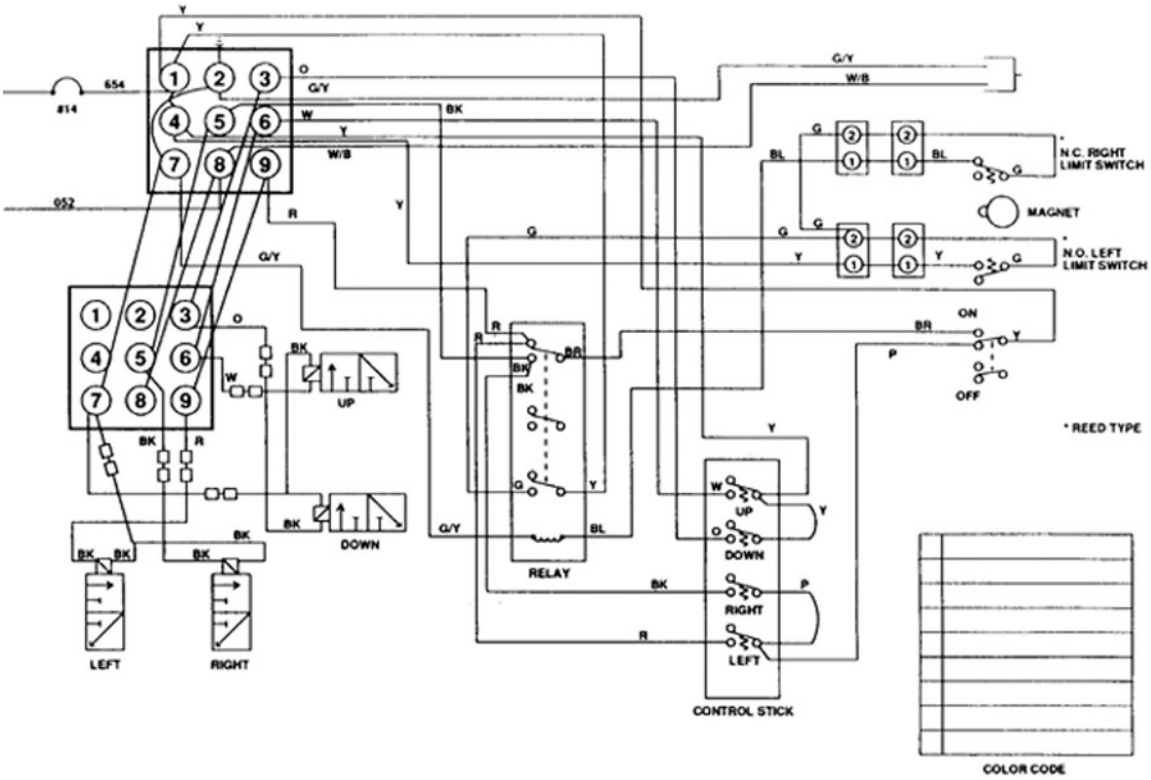

Figure 1–28. Bumper turret electrical.

Clean the cables with a lint-free cloth moistened with solvent. Inspect the cable for flexibility and the condition of the cable jacket. Only the rod seal and hardware items of the cable ends are serviceable. If the turret fails to operate from side to side in MANUAL mode, check the microswitches in the control box and the electrical connections. If the turret fails to move from one side to the other side in OSCILLATION mode, check the limit switches and the holding relay for proper operation.

NOTE: The system air pressure must be above 90 psi for the turret to operate.

009. Booster heater maintenance

By now, you should know the booster heater is a critical unit on crash fire trucks. Quality maintenance is essential for successful operation. Because the P-19 booster heater uses an electronic control unit, maintenance on the heater is minimal. Most maintenance activity is limited to fundamental troubleshooting procedures and replacing defective parts.

Your biggest booster heater maintenance problems will be electrical. So, inspect all wiring harnesses for chafed or burned insulation and all terminal connectors for loose connections and broken parts. Always replace any broken, worn or burned electrical wiring. If you find wires with several broken strands, remove and replace them. The broken strands increase the wire's resistance and lower the efficiency of electrical components, especially in the heater ignition system. By replacing wires during inspections, you can prevent booster heater malfunctions related to wiring.

Since the booster heater is an electrical component, use an ohmmeter to isolate malfunctions and defective parts. Figures 1–30 and 1–31 illustrate some maintenance testing procedures in the event the booster heater fails to function. Remember; when in doubt always refer to the appropriate technical manuals for assistance.

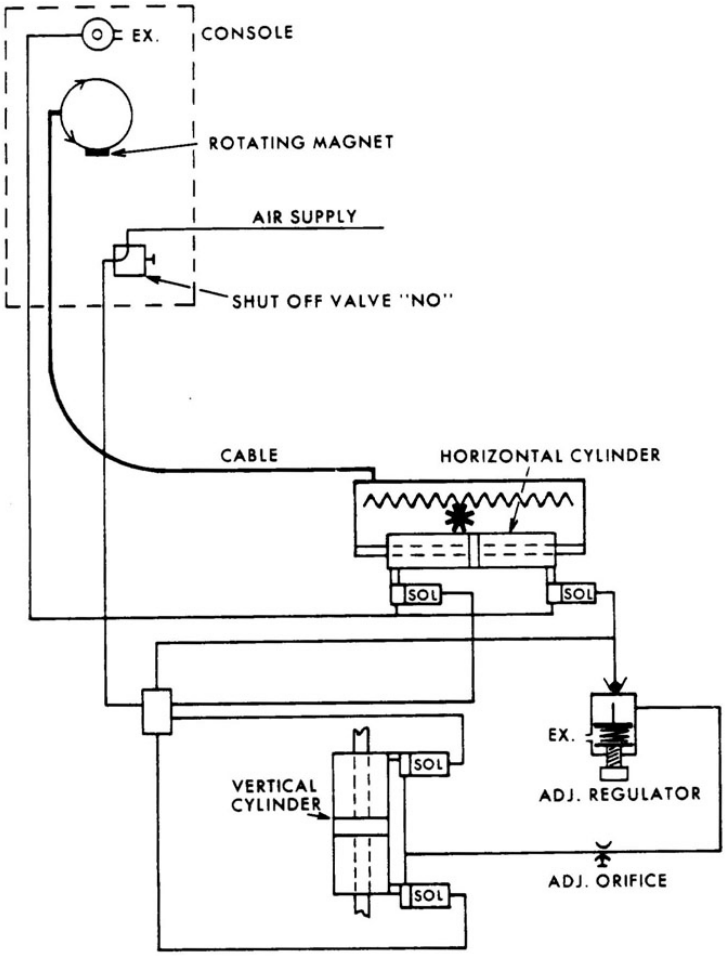

Figure 1–29. Bumper turret air schematic.

NOTE: During inspections or maintenance, DO NOT soak or spray cleaning solutions on electrical parts such as coils, junction blocks, switches and igniters, which use insulating materials. Instead, clean these parts with a clean, lint-free, cloth moistened with dry cleaning solvent.

SAFETY CAUTION: Be careful while working in the booster heater compartment. The booster heater generates a lot of heat when in operation. The possibility of burns is always a risk.

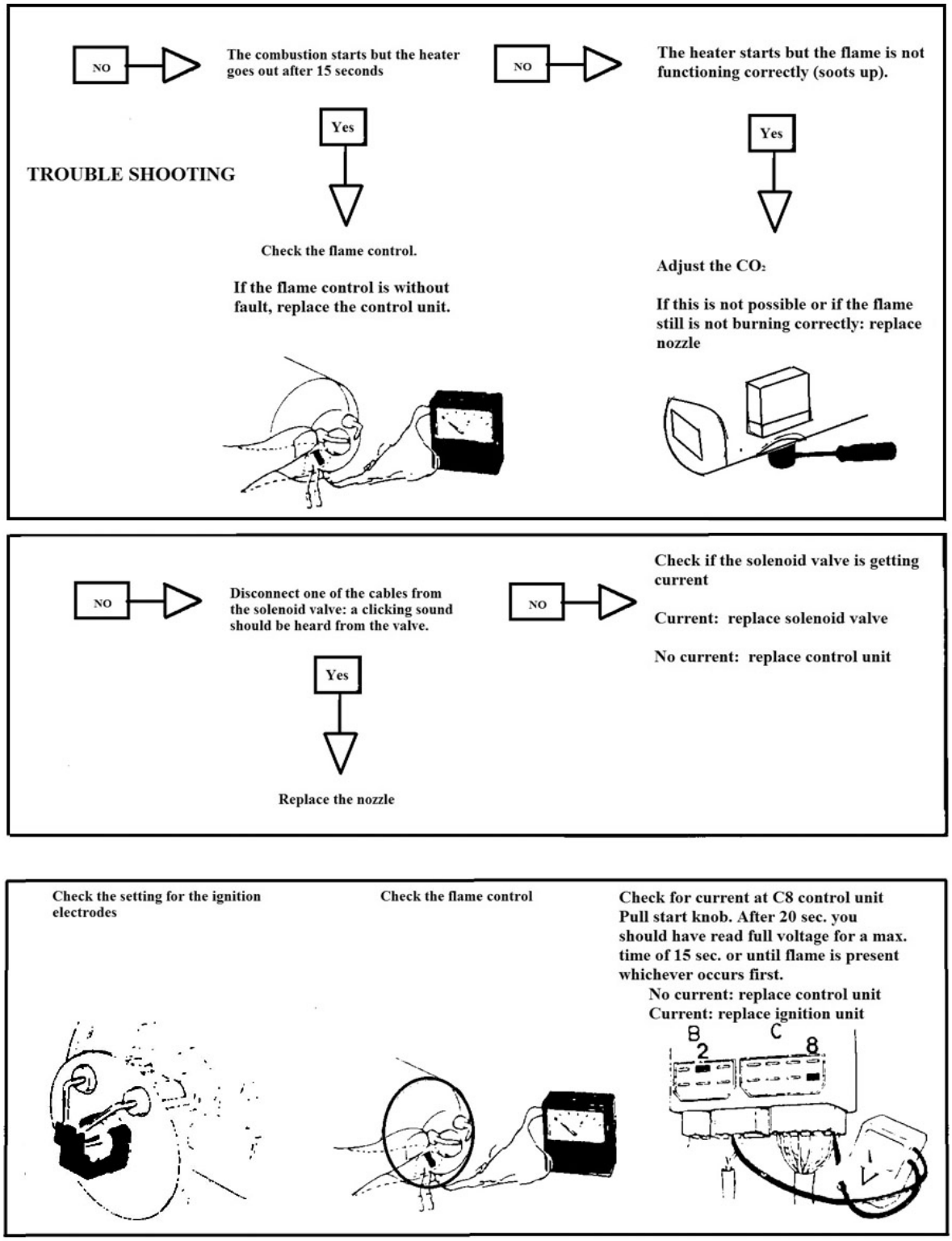

Figure 1–30. Booster heater troubleshooting procedures.

Switch on the heater with the timer or the switch.

Does this happen?

The combustion does not start within 20 seconds and the heater disengages after 2.5 minutes.

Yes

Three possible reasons
A. Overheat fuse blown (if so equipped)
B. Fuel problem
C. Ignition problem

No

The heater disengages after 2.5 minutes but the water pump continues to run

Yes

If the heaters water temperature is below 115°F: replace the control thermostat.

A Overheat fuse
Check for current through the fuse with OHM meter.

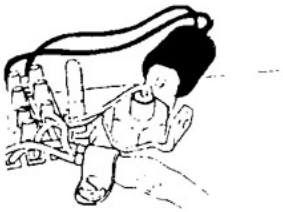

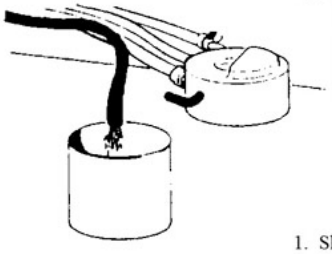

B Fuel supply

Start the heater. Disconnect the return line at the tank. Hold the disconnected end over an open container and see if there is even flow through the pipe

No

1. Shortage of fuel
2. Blocked filter, tank and suction line
3. Incorrectly connected fuel lines

Yes

Open the heater and pull loose both the ignition cables from the ignition electrodes.
Start the heater and see: if fuel spray spurts from the nozzle.

Yes

See further under ignition fault.

C Ignition Problem

Disconnect a cable from the solenoid valve. hold it against the flame control and start the heater.
After about 15 seconds a spark should develop between the electrodes and remain on for about 15 seconds.

Check the voltage at terminal B1 on the connector for the control unit

For 24-volt system there should be a minimum 18.5 volts present

For 12-volt systems there should be a minimum 9.5 volts present.

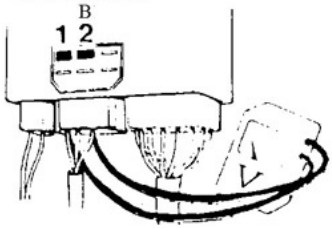

Figure 1–31. Booster heater troubleshooting procedures.

Water recirculating pump

The P-19 water recirculating pump is an electric motor-driven, centrifugal-type pump. The quickest way to see if your pump is working is to open the front manhole cover of the water tank and see if there is any water flowing into the tank from the small fitting near the top of the front wall. Keep in mind, the booster heater must be running for the circulating pump system to work. If the pump is not working, you have to locate the malfunctions using a voltmeter. When troubleshooting the water recirculating pump motor, disconnect the pump motor wires and connect the voltmeter between the hot wire and ground. When the recirculating pump switch is in the ON position, you should get a voltage reading on the voltmeter. If this test shows no reading, check your circuit breaker, the switch, and all connections to the pump. If the pump is defective, replace the pump.

Heat exchangers

As the name implies, it exchanges heat from the main winterization system to the water recirculating system. The heat exchanger is constructed of lightweight metal with two inlets and two outlets. The water recirculating pipe goes straight through the heat exchanger while the main winterization coolant surrounds it to keep the two systems separate and provide for heat exchange. Inspect the heat exchanger for leaks at the connections. Also, check the efficiency of the heat transfer from the main winterization system to the water recirculating system. A simple and quick way to check heat transfer is to feel the inlet and outlet pipes at the heat exchanger of the water recirculating system. The outlet pipe should be warmer than the inlet pipe. If the outlet is not warmer, remove the heat exchanger and check for internal corrosion buildup. Clean out any minor corrosion of the heat exchanger. If you find *excessive* corrosion, replace the heat exchanger.

Winterization warning system

The P-19 winterization warning system consists of two relays mounted to the back of the left-hand dash and two flow switches, one for the booster heater system (main) and one for the water subsystem. Figure 1–32 shows these components; refer to the figure as you read through the following paragraphs. The booster heater control unit controls the R-1 relay. If there is no ignition after 20 seconds, the relay blows the fire truck horn and turn on the booster heater failure light.

NOTE: The system air pressure must be above 65 psi for the horn to work.

R-1 relay controls the booster heater ON light, if there is no problem with the system, power from connector B3 breaks the warning circuit supplying a ground for the R-1 relay also supplying a ground for the ON light through connector B6.

R-2 relay controls the pump failure warning circuit and is controlled by the flow switches. If either of the flow switches for the main or water subsystem does not open, it causes the horn to blow and the failure light to come on. The flow switches provide a ground for R-2 relay; this is why you might hear a short burst of the horn when you first turn on the booster heater and then again when you turn on the circulating pump. This is normal, R-1 relay is a normally closed relay and R-2 is a normally open relay. Until they make or break their ground, the warning circuit is activated.

The engine subsystem does not have any type of warning system. It runs every time the main system is ON; thus, it would be senseless running a subsystem if the main system were not working. Properly maintaining the antifreeze is essential for the longevity of winterization system components.

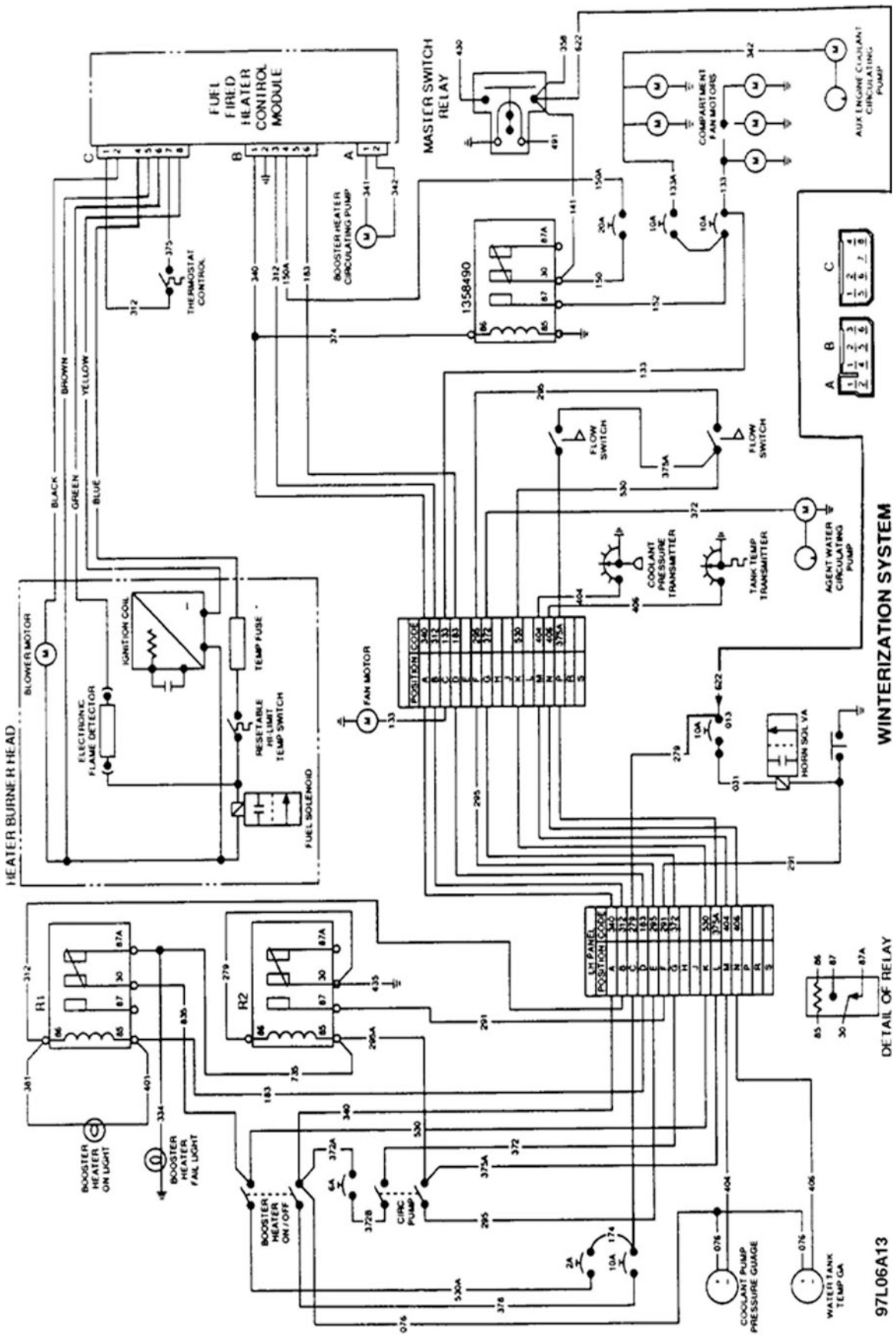

Figure 1–32. Electrical schematic.

Self-Test Questions

After you complete these questions, you may check your answers at the end of the unit.

006. Troubleshooting the power divider

1. What is the first step for troubleshooting the P-19 modulating clutch?

2. What is indicated if air is present at the modulating clutch release chamber with the agent selector valve in the OFF position?

3. How is the modulating clutch free travel adjusted?

4. When should the modulating clutch inner discs be replaced?

5. Where is the pressure gauge installed when you are troubleshooting the modulating clutch oil pump?

6. What are two malfunctions that can cause low modulating clutch oil pressure?

7. What servicing is required for the P-19 power divider lubrication system?

8. What is a prime indication of the P-19 water or foam pump clutch slippage?

9. What is the first check when troubleshooting the water or foam pump clutch for slippage?

10. What maintenance is required if the pump clutch snaps over with less than 500 psi?

11. What servicing is required on the water pump clutch?

007. Troubleshooting the dispensing system for low pressure

1. List five causes for low-dispensing system pressure.

2. What malfunction occurs if the inversion valve is not operating properly?

3. What is an indication of a faulty water pump?

4. What is used to clean internal parts of a water pump?

5. What maintenance action is required if small nicks or burrs are found on the internal machined surfaces of a water pump?

6. What should you check for if the water pressure does not increase after adjusting the pilot relief valve?

7. If water pressure is still low after cleaning the pilot relief valve orifice, what is the next maintenance action?

8. What should the discharge pressure be when the pilot selector valve is in “structural”?

9. If water pressure is still low after testing the pressure relief valve, what is the next maintenance action?

008. Turret system maintenance

1. What possible conditions exist when either water or foam fails to discharge?

2. What is the purpose of the four-way solenoid valve?

3. What is the probable cause of an uneven water or foam discharge pattern from the roof turret?

4. What is the correct dispersed distance for a properly adjusted pattern control cable on the roof turret?

5. What maintenance action is required when plastic parts on the bumper turret are cracked or distorted?

6. What should you look for when checking the internal parts of a bumper turret?

7. How is the oscillation cable operated?

8. What do you check if the bumper turret fails to operate from side to side in MANUAL mode?

009. Booster heater maintenance

1. What tool do you use to isolate malfunctions and defective parts when troubleshooting the booster heater?

2. What is the quickest way to see if the water recirculating pump is working?

3. How do you troubleshoot the water recirculating pump?

4. What do you look for when inspecting the heat exchangers?

5. What relay controls the booster heater ON light?

6. What relay controls the pump failure warning circuit?

7. When does the engine subsystem run?

Answers to Self-Test Questions

001

1. The engine.
2. Between the engine and transmission.

3. The water pump clutch wing.
4. A means to safely operate the dispensing system at full engine speed, while driving the truck.
5. Air pressure at a minimum of 90 psi.
6. Dry type, snap over center.
7. Reservoir.
8. Flow switch.
9. Collect large debris before the oil returns to the reservoir.
10. Five speeds forward and one reverse.
11. Like a transfer case to transmit torque downward to the front axles.
12. A controlled traction; to provide better traction in soft terrain or slippery conditions.

002

1. Fiberglass.
2. 130 gallons.
3. A pressure relief valve with a bypass pipe.
4. Multimetering manifold and eductor.
5. To select either foam or water as the agent.
6. Single-stage, centrifugal-type.
7. Whenever the agent selection valve on the dash is in the WATER or FOAM position.
8. The centrifugal pump cannot create its own vacuum.
9. In the piping, on the outlet side of the water pump.
10. 500 gpm at approximately 225 psi discharge pressure at the pump.
11. 250 gpm at 240 psi.
12. A hard hose.

003

1. 24-volt.
2. Automatic reset-type.
3. Disconnect batteries.

004

1. Maintain the temperature in the cab, most compartments, and the engine.
2. Ethylene glycol engine coolant.
3. Three. (1) main system (2) engine subsystem (3) water subsystem.
4. 172ºF.
5. Control unit.

005

1. Agent selection valve.
2. To direct air pressure.
3. Controls air pressure to an actuating device such as an air cylinder.
4. CONTROLLED.
5. Sequence valve.

006

1. Build up full-system air pressure.
2. Agent selector valve is defective.
3. By turning the air chamber clevis.
4. When the facings are worn to the bottom of the groove pattern.

5. On the inlet side of the power divider oil filter housing.
6. Clogged screen in bottom of power divider or a defective lubrication pump.
7. Keeping the lubricating oil at the proper level and changing the oil and filter at prescribed intervals.
8. Low or fluctuating water pump pressure.
9. Make sure there is sufficient air pressure.
10. Adjust or replace the clutch.
11. Periodically lubricating the release bearings and clutch engagement shafts.

007

1. (1) Improper engine speed, (2) inversion valve malfunction, (3) defective water pump, (4) pilot control valve improperly adjusted, and (5) defective or sticking relief valve.
2. Water pump clutch will not engage as it should.
3. Excessive noise or vibration.
4. Approved cleaning solvent.
5. Use crocus cloth to polish the marred part.
6. A dirty or restricted orifice.
7. Disassemble the pilot relief valve and inspect passages within the control body for obstructions.
8. 150 psi.
9. Adjust the relief valve.

008

1. Defective four-way solenoid valve, defective wiring or defective discharge valve.
2. Controls air pressure for opening and closing of the roof turret discharge valve.
3. Damaged or dirty turbine or pattern control cable out of adjustment.
4. 75 feet.
5. Replace.
6. Scratches, nicks or burrs.
7. Mechanically.
8. Microswitches in the control box and the electrical connections.

009

1. An ohmmeter.
2. Open the front manhole cover on the water tank and see if there is any water flowing into the tank from the small fitting near the top of the front wall.
3. Disconnect the pump motor wires and connect the voltmeter between the hot wire and ground.
4. Leaks at the connections and the efficiency of the heat transfer from the main winterization system to the water-recirculation system.
5. R-1.
6. R-2.
7. Every time the main system is on.

Complete the unit review exercises before going to the next unit.

Unit Review Exercises

Note to Student: Consider all choices carefully, select the *best* answer to each question, and *circle* the corresponding letter. When you have completed all unit review exercises, transfer your answers to the Field-Scoring Answer Sheet.

Do not return your answer sheet to the Air Force Career Development Academy (AFCDA).

1. (001) What P-19 drivetrain component provides power to drive the transmission and firefighting system simultaneously?
   a. Engine.
   b. Nose box.
   c. Transmission.
   d. Torque converter.

2. (001) While you are driving the truck, the P-19 modulating clutch provides the operator a means to safely operate the
   a. engine.
   b. transmission.
   c. torque converter.
   d. dispensing system.

3. (001) Where is the P-19 modulating clutch located?
   a. Inside the transmission.
   b. Inside the front axle.
   c. Inside the power divider.
   d. Inside the water pump clutch wing.

4. (001) What *minimum* air pressure activates the P-19 water pump clutch air chamber?
   a. 20 pounds per square inch (psi).
   b. 40 psi.
   c. 90 psi.
   d. 150 psi.

5. (001) Which P-19 power divider hydraulic system component supplies the system with 10-weight (wt.) oil?
   a. Pump.
   b. Reservoir.
   c. Engine oil pan.
   d. Transmission sump.

6. (001) Which P-19 component lubricates the modulating clutch, center output shaft, and all gears within the power divider?
   a. Rotary piston pump.
   b. Vane-type pump.
   c. Piston-type pump.
   d. Gear-type pump.

7. (001) Which P-19 component controls the power divider low oil light located on the cab dash?
   a. Flow switch.
   b. Toggle switch.
   c. Pushbutton switch.
   d. Four-way solenoid.

8. (001) Why is there a filter screen in the sump of the power divider?
   a. Allow oil to flow back to the reservoir.
   b. Restrict oil from returning to the reservoir.
   c. Collect small debris before the oil returns to the reservoir.
   d. Collect large debris before the oil returns to the reservoir

9. (001) The P-19 transmission provides five speeds forward and how many reverse speeds?
   a. One.
   b. Two.
   c. Three.
   d. Four.

10. (001) How does the P-19 transmission shift into and out of first gear?
    a. Automatically.
    b. Electrically.
    c. Manually.
    d. Air operated.

11. (001) Which P-19 drivetrain component drives both the front axles and a drive-through shaft for the rear axle?
    a. Engine.
    b. Transmission.
    c. Power divider.
    d. Nose box.

12. (001) The P-19 controlled traction clutch pack is applied when an operator engages the
    a. transmission.
    b. agent selection valve.
    c. booster heater switch.
    d. differential lock switch.

13. (002) Where is the P-19 foam tank located?
    a. Next to the proportioning valve.
    b. Behind the water tank.
    c. Engine compartment.
    d. Side compartment.

14. (002) Which P-19 component delivers foam concentrate into the water system?
    a. Water pump.
    b. Proportioning valve.
    c. Agent selection valve.
    d. Multimetering manifold.

15. (002) The P-19 multimetering manifold delivers foam concentrate using three orifices controlled by
    a. air valves.
    b. hydraulic valves.
    c. electrical valves.
    d. electric over hydraulic valves.

16. (002) A multimetering air valve opens on the P-19 dispensing system when
    a. the water pump engages.
    b. the water pump disengages.
    c. closing a discharge valve.
    d. opening a discharge valve.

17. (002) The P-19 agent selection valve is located on the
    a. right-hand side of dash.
    b. left-hand side of dash.
    c. bottom of dash.
    d. top of dash.

18. (002) P-19 operators use the agent selection valve to select
    a. forward or reverse.
    b. foam or water.
    c. electric or air.
    d. fast or slow.

19. (002) The P-19 and P-19B (USAF variants) water pump capacity is
    a. 700 gallons per minute (gpm).
    b. 800 gpm.
    c. 900 gpm.
    d. 1000 gpm.

20. (002) What type of water pump do all variants of the P-19 use?
    a. Single-stage, air-type.
    b. Single-stage, rotary-type.
    c. Single-stage, hydraulic-type.
    d. Single-stage, centrifugal-type.

21. (002) The P-19 dispensing system water-priming pump is driven by
    a. an electric motor.
    b. a hydraulic motor.
    c. a vacuum motor.
    d. an air motor.

22. (003) Most major P-19 electrical circuits are protected by
    a. relays.
    b. resistors.
    c. in-line fuses.
    d. circuit breakers.

23. (003) Which P-19 electrical component disconnects power between the vehicle batteries and electrical system *except* the winterization system?
    a. Master solenoid.
    b. Master relay.
    c. Master fuse.
    d. Master resistor.

24. (004) Which P-19 winterization system component heats the coolant?
    a. Booster heater.
    b. Heat exchangers.
    c. Heater cores.
    d. Circulating pump.

25. (004) Which P-19 winterization system component circulates the coolant?
    a. Heater cores.
    b. Booster heater.
    c. Heat exchanger.
    d. Circulation pumps.

26. (004) Where are the P-19 winterization system controls located?
    a. Passenger side.
    b. Top of cab.
    c. Center console.
    d. Left dash panel.

27. (004) The P-19 winterization system consists of how many systems?
    a. One.
    b. Two.
    c. Three.
    d. Four.

28. (004) Placing the P-19 booster heater in the ON position energizes relays
    a. J1, J2, and J3.
    b. J4, J5, and J6.
    c. K1, K2, and K3.
    d. K4, K5, and K6.

29. (004) To purge the combustion chamber of unburned fuel and fumes after combustion stops, the P-19 winterization system booster heater blower motor relay should remain closed for
    a. 2 minutes.
    b. 2 ½ to 3 minutes.
    c. 3 ½ minutes.
    d. 3 ½ to 4 minutes.

30. (004) The purpose of having diodes in the P-19 winterization system booster heater ignition system is to
    a. hold the relays closed.
    b. hold the relays open.
    c. control resistance.
    d. control voltage.

31. (004) The P-19 booster heater operates until the coolant reaches
    a. 90 degrees Fahrenheit (ºF).
    b. 95 ºF.
    c. 172ºF.
    d. 400ºF.

32. (004) The P-19 high limit temperature switch opens at
    a. 90 degrees Fahrenheit (ºF).
    b. 95 ºF.
    c. 195 ºF.
    d. 400 ºF.

33. (004) What P-19 winterizations system booster heater ignition system component uses transistors, resistors, and capacitors to control the relays during heater operation?
    a. Control unit.
    b. Photo-resistor.
    c. Temperature fuse.
    d. Thermostat control.

34. (005) The P-19 uses a three-way control valve. This valve is commonly called the
    a. relief valve.
    b. pilot relief valve.
    c. pressure relief valve.
    d. agent selection valve.

35. (005) The main purpose of the air double-check valve is to
    a. control high-pressure leaks.
    b. control the actuating devices.
    c. control air pressure to the water pump.
    d. direct air pressure to various components.

36. (005) Which P-19 air double check valve component slides to close off the outlet?
    a. Shuttle valve.
    b. Piston valve.
    c. Rotary valve.
    d. Spring valve.

37. (005) Which P-19 air system valve controls air pressure to an actuating device?
    a. Relief valve.
    b. Agent selection valve.
    c. Inversion valve.
    d. Air double check valve.

38. (006) You are troubleshooting the modulating clutch on the P-19 power divider. You discover there is no air pressure at the modulating clutch release chamber. Your *first* step to correct this problem is to
    a. adjust the spool valve.
    b. check the clevis pin adjustment.
    c. check for free travel of the clutch linkage.
    d. adjust the modulating clutch pressure relief valve.

39. (006) When adjusting free travel on the P-19 power divider modulating clutch the *first* step is to turn the
    a. air-chamber clevis.
    b. spool valve clockwise.
    c. spool valve counter clockwise.
    d. modulating clutch release bearing.

40. (006) When troubleshooting the P-19 water pump clutch for slippage your *first* troubleshooting step would be to see if air pressure is
    a. 60 pounds per square inch (psi) or lower.
    b. 80 psi or lower.
    c. 90 psi or higher.
    d. present at the chamber.

41. (007) Why would there be low flow while dispensing water or foam with the P-19?
    a. A fuse is faulty.
    b. The hydraulics are low.
    c. Electrical output is high.
    d. Engine speed is improper.

42. (007) When troubleshooting the P-19 dispensing system for low pressure, the *first* step to determine if there is a faulty inversion valve is to
    a. test for low discharge pressure.
    b. test for high discharge pressure.
    c. inspect for excessive noise or vibration.
    d. inspect for excessive leakage at delivery and exhaust.

43. (007) Why would there be excessive noise or vibration at the P-19 dispensing system water pump?
    a. A worn impeller.
    b. Leaking O-rings.
    c. A broken return spring.
    d. Worn drive shaft bearings.

44. (007) The pilot relief valve is *adjustable* because it controls the discharge pressure during
    a. ROLL mode.
    b. STANDBY mode.
    c. ROAD mode operation.
    d. CRASH mode operation.

45. (007) If water pressure does *not* increase when adjusting the pilot relief valve on the P-19, check for a dirty or restricted
    a. handline.
    b. water inlet.
    c. bumper turret.
    d. orifice.

46. (008) If the P-19 dispensing system roof turret fails to discharge either water or foam, check for a defective
    a. four-way solenoid valve and pilot relief valve.
    b. pressure relief valve and pilot relief valve.
    c. four-way solenoid valve and pressure valve.
    d. four-way solenoid, wiring, and discharge valve.

47. (008) What *must* be done to ensure proper reassembly of the P-19 four-way solenoid valve?
    a. Mark the bolts.
    b. Tag the bolts.
    c. Tag or mark the bolts.
    d. Tag or mark airlines and wires.

48. (008) The straight stream distance of the P-19 roof turret is
    a. 175 feet.
    b. 185 feet.
    c. 195 feet.
    d. 205 feet.

49. (008) The fully dispersed distance of the P-19 roof turret is
    a. 105 feet.
    b. 95 feet.
    c. 85 feet.
    d. 75 feet.

50. (008) The recommended procedure for cleaning the cables on a P-19 dispensing system bumper turret is to
    a. use compressed air.
    b. wipe them with a crocus cloth.
    c. wipe them with a lint-free cloth moistened with solvent.
    d. soak them in an approved solvent and dry them with air.

51. (009) Broken strands of wiring in the P-19 booster heater electrical system will cause a
    a. decrease in resistance.
    b. an increase in resistance.
    c. decrease in amperage.
    d. an increase in voltage.

52. (009) You are checking a P-19 booster heater for operation. You find that combustion starts but goes out after 15 seconds. In this situation, you check the
    a. flame control unit.
    b. booster heater switch.
    c. over-temperature fuse.
    d. thermostat control unit.

53. (009) You are using a voltmeter to test a P-19 winterization system recirculating pump for a malfunction. To do this properly, put the pump switch in the
    a. manual-drive position.
    b. manual-delay position.
    c. OFF position.
    d. ON position.

54. (009) The P-19 winterization system booster heater ON light is controlled by the
    a. R1 relay.
    b. R1 solenoid.
    c. R1 valve.
    d. R1 diode.

Please read the unit menu for unit 3 and continue ➔

Unit 2. P-23 Firefighting Truck

2–1. P-23 Firefighting Truck Systems 2–1
010. General information 2–1
011. Transmission 2–2
012. Power divider/torque converter 2–4
013. Characteristics of the electronic control system 2–5
2–2. P-23 Firefighting Truck Maintenance 2–11
014. Troubleshooting and repairing 2–11
015. Dispensing system components and repair 2–13

IN THIS UNIT, you learn about the A/S32P-23 crash-fire-rescue (CFR) truck called the P-23. The following lessons give you a good understanding of the P-23 firefighting truck, its capabilities, and some maintenance practices.

2–1. P-23 Firefighting Truck Systems

This section covers the P-23 firefighting truck systems. Just like the P-19, you must understand the fundamental systems before you can effectively maintain the truck. The P-23 systems covered in this section include general chassis description, the transmission, power divider (torque converter), and electrical control system. Figure 2–1 shows the exterior of the P-23 CFR truck. Look the figure over to get a good idea of all the components and parts that make up this important fire-fighting vehicle.

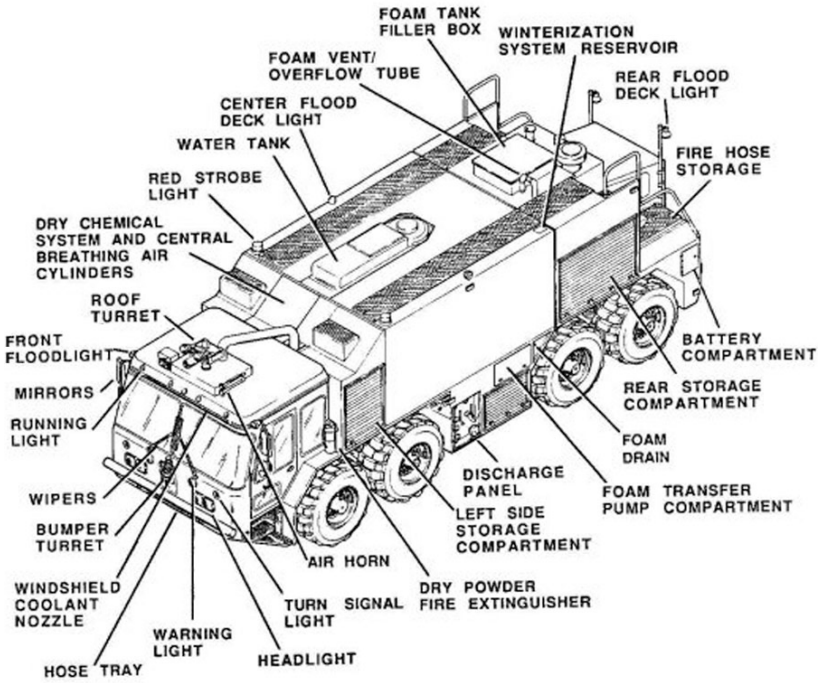

Figure 2–1. Truck exterior arrangement.

010. General information

The P-23 is a critical fire-fighting vehicle. The design of this vehicle was carefully engineered to meet the needs of the United States military. This lesson describes the P-23 in general, and gives general performance characteristics.

Description

The P-23 has a Detroit Diesel 8V92TA (DDA) engine that powers its functions. The single diesel engine powers the truck drivetrain and agent water pump. The firefighting systems are self-contained. This means there is no need for an outside source of extinguishing agents. The truck incorporates a 3,300-gallon capacity water tank, 500-gallon capacity stainless steel foam tank, and a 500-pound rated capacity steel dry chemical storage tank.

Performance characteristics

The fully loaded P-23 accelerates from zero to 50 mph in 41 seconds on level pavement. The P-23's top speed is 72 mph. It has the ability to climb a 50-percent grade without spilling fluid. The P-23 is also capable of maneuvering at low speeds in difficult terrain with its fire-fighting equipment operating at full capacity. Additionally, the P-23 has the stability to maintain full discharge on side slopes.

011. Transmission

Shown in figure 2–2 are two views of the P-23 transmission. The transmission shown is an illustration of the model TD61–1172 manufactured by the Twin Disk Corporation. The transmission is a hydraulically-actuated and electrically-controlled power shift unit providing six forward speeds and one reverse speed. An electronic control system provides automatic shifting and coordinates the functions of the transmission and the power divider (torque converter).

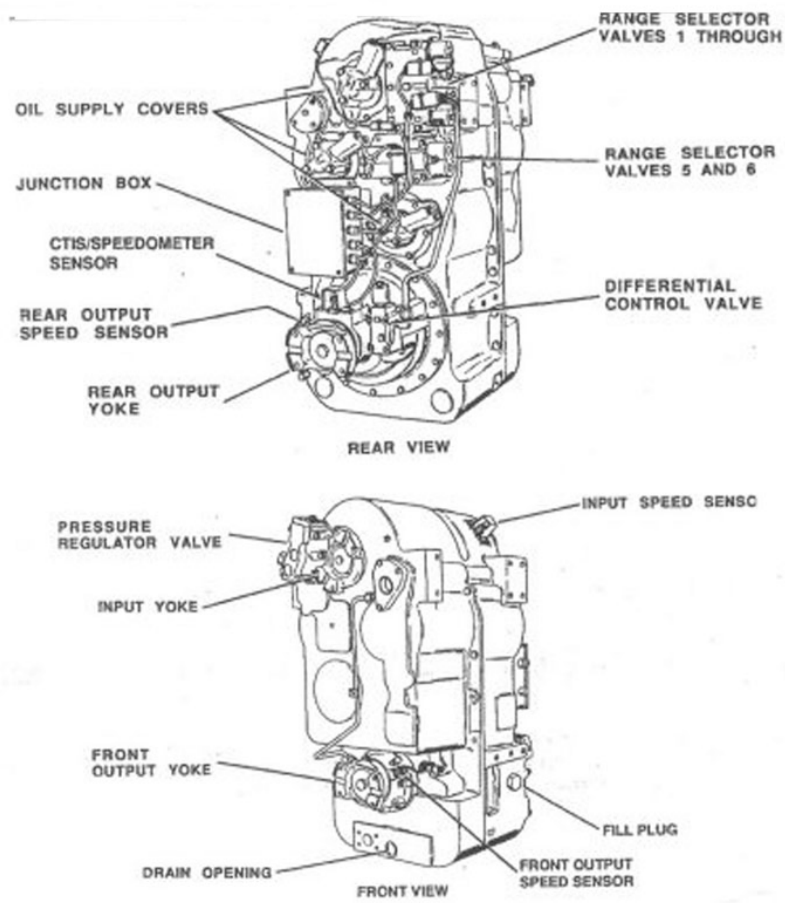

Figure 2–2. Transmission.

There are two main modes of operation: ROAD and CRASH (modulating).

ROAD mode

When in the D6 position, the transmission automatically progresses through gear ranges two through six in both up-shift and down-shift operation. ROAD mode is the normal driving mode.

CRASH mode

When in CRASH mode, the transmission starts in first gear and automatically progresses to the gear range selected.

Lubrication

The transmission contains 28 quarts (qts) of lubricant in the sump with an overall system capacity of 120 qts. The reason for the large oil quantity is the transmission also serves as the reservoir for the power divider (shown in fig. 2–3). Under normal conditions, the lubricant used is heat transfer oil (HTO) 30 wt.; under cold conditions, HTO 10 wt. is used. To check for proper fluid level, the vehicle must be on a level surface with the engine running at idle and at *operating temperature*—if you do not do this, you will get a faulty reading. If you use the sight gauge on the transmission while doing a cold check, there should be about an inch of fluid visible in the sight gauge. Do not add any fluid at this time, as the fluid heats to operating temperature it expands!

Two gear-type pumps mounted to the power divider circulate the lubricant. The first gear-type pump delivers a maximum output of 45 gpm. A regulator valve assembly mounted on the transmission controls the main system (220 to 240 psi at 2,100 rpm) and lube pressure (35 to 45 psi). The second gear type pump draws fluid from the sump of the power divider and returns the fluid to the transmission sump.

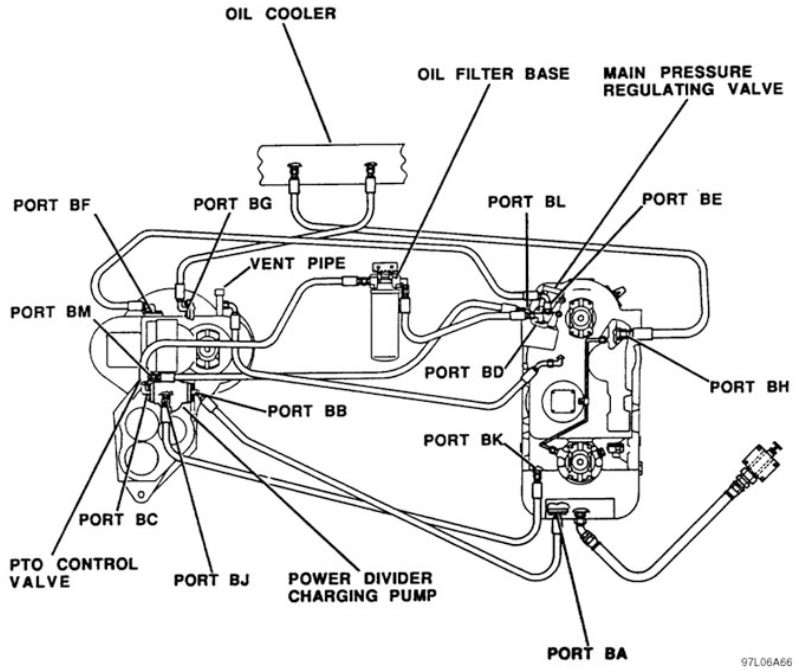

Figure 2–3. Power divider.

Range selector valves

Six range selector valves control the application of the transmission clutches. Four of these valves are actuated by the on/off solenoids located on a single valve body and numbered 1 through 4. The remaining two valves (numbered 5 through 6) are electric modulating types contained in a single valve body. These two valves are polarity sensitive solenoids and must be wired correctly to function correctly. If wired incorrectly, the wrong voltage is received and causes erratic operation (if at all) of

the transmission. The reason for this is the valves work on variable voltage. If a valve is wired incorrectly, simply rewire it. Improper wiring will not damage the valves.

012. Power divider/torque converter

The torque converter/power divider (fig. 2–4) is mounted on the engine flywheel housing and serves to split the engine power into two separate drives: agent water pump and main drive to the transmission.

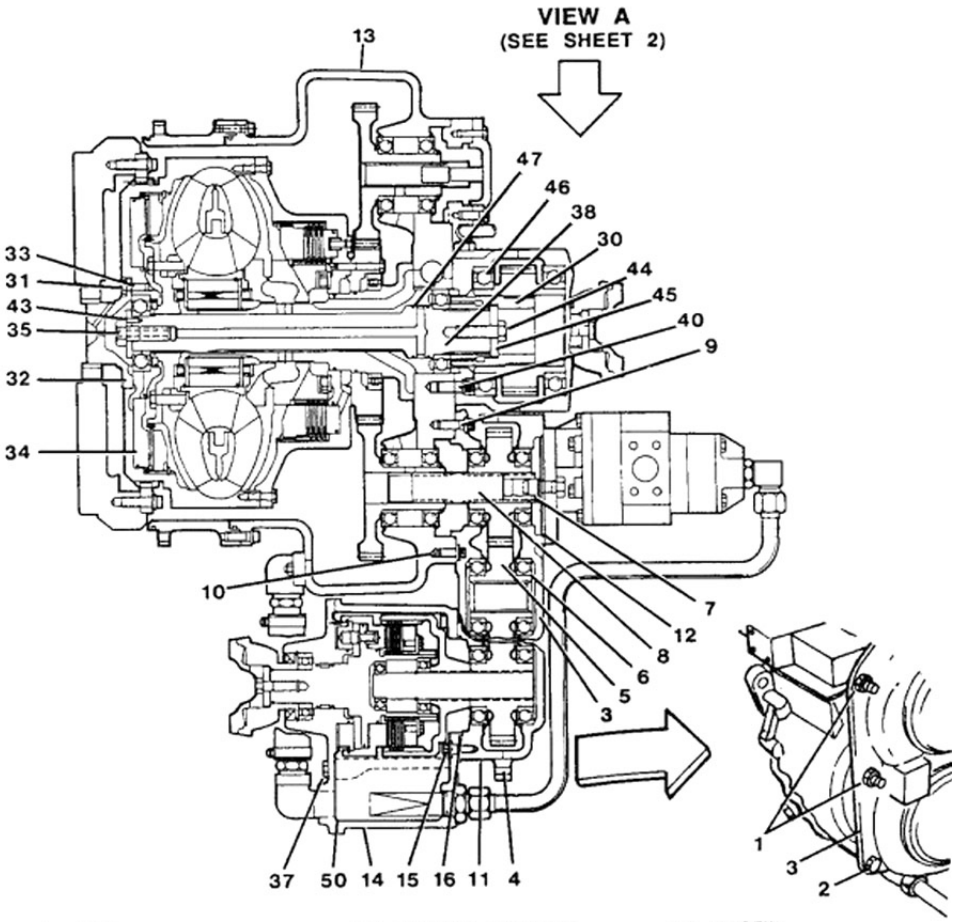

1. NUT
2. SCREW
3. FRONT HOUSING
4. DOWEL PIN
5. GEAR
6. BALL BEARING
7. ADAPTER
8. SHAFT
9. SCREW
10. SCREW
11. REAR HOUSING
12. O-RING
13. CONVERTOR HOUSING
14. CLUTCH HOUSING
15. SCREW
16. O-RING
17. SCREW
18. BEARING RETAINER
19. OIL SEAL
20. O-RING
21. SHIM
22. SHIM
23. SHIM
24. SCREW
25. DOWEL PIN
26. DRIVEN GEAR
27. ROLLER BEARING
28. DRIVE GEAR
29. BALL BEARING
30. SPLINED SLEEVE
31. SCREW
32. FLYWHEEL PILOT
33. ROLL PIN
34. ROTATING HOUSING
35. SCREW
36. RETAINING WASHER
37. SCREW
38. OUTPUT SHAFT
39. SCREW
40. SCREW
41. PILOT
42. O-RING
43. DOWEL PIN
44. SCREW
45. RETAINER WASHER
46. BALL BEARING
47. PISTON RING
48. REAR HOUSING
49. FRONT HOUSING
50. GASKET

97L06A50

Figure 2–4. Torque converter/power divider.

In addition, the power divider provides mounting and drive arrangements for the modulating clutch oil pump. This pump circulates oil through the torque converter/power divider and transmission (fig. 2–5) for lubrication and dissipates heat generated by the modulating clutches.

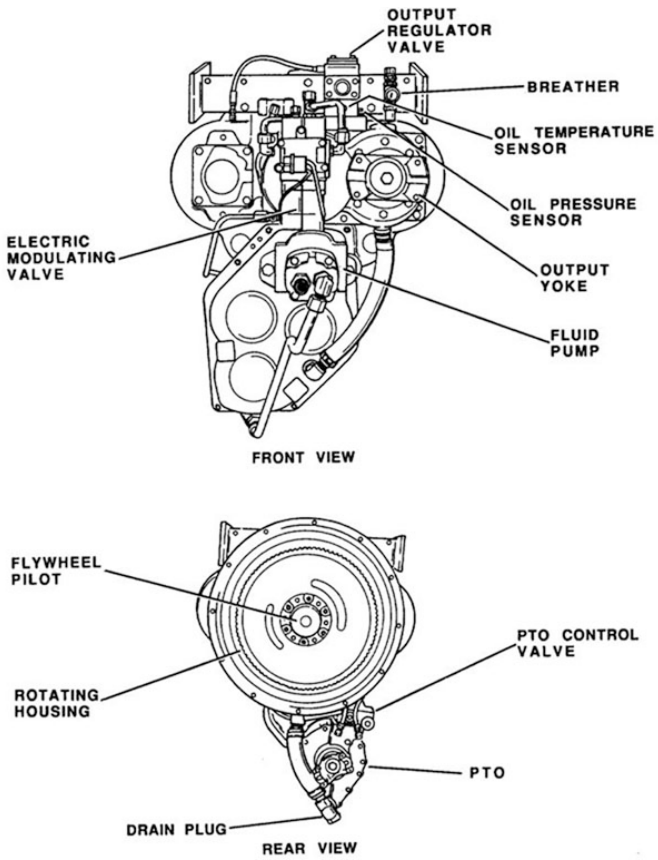

Figure 2–5. Transmission lubrication system.

Agent water pump drive

The agent water pump is driven by a power takeoff (PTO). It provides constant power to the pump when the engine is operating. The speed of the engine controls the agent pump speed. A separate hydraulically-actuated clutch is provided in the agent pump drive. This separate hydraulically-actuated clutch provides a means of engaging and disengaging the agent pump. An electrical switch on the instrument panel in the cab controls the engagement of the separate hydraulically-actuated clutch.

Main drive to transmission

The modulating clutch is connected to the engine flywheel through the torque converter rotating housing. The modulating clutch controls the main drive to the transmission. Clutch modulation (controlled slippage) occurs whenever the pump clutch is engaged with the transmission in any gear. The clutch modulates to provide driveline torque and speed requirements (as necessary) to maneuver while still operating the fire-fighting system.

NOTE: During normal ROAD mode operation, the modulating clutch is fully engaged and the PTO clutch is disengaged.

013. Characteristics of the electronic control system

The electronic control system (fig. 2–6) provides automatic shifting for the transmission/power divider and coordinates function of the vehicle, power divider, and transmission. Various external components are used to provide inputs for the control as well as the outputs for the operation of the transmission/power divider system. Different operating characteristics are obtained through the position of various switches to the control system. In the event of a failure of the electronic control system in ROAD mode, transferring connectors P3 and P4 from the control unit enclosure to the

manual override enclosure can achieve manual operation. There are two enclosures, both are located in the cab of the vehicle under the left-hand (L/H) side of the dash.

Manual operation allows the transmission to operate in reverse, neutral, and third gear when placing the shift controller in the D6 position. The control system components and functions are described in the following paragraphs.

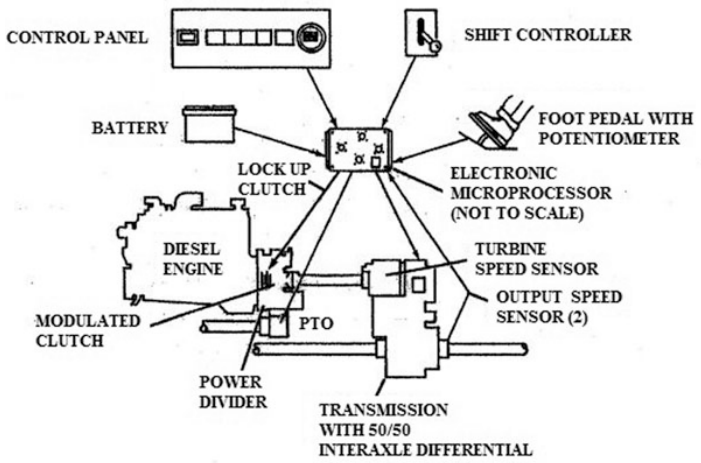

Figure 2–6. Electronic control system.

Controller

The controller is a microprocessor-based unit (computer) with 12-volt direct current (VDC) inputs.

Range selector

The range selector selects forward ranges, neutral, and reverse. When the selector lever is in the neutral position, the transmission will always be in neutral. This is ensured by both the computer neutral and redundant neutral (which is an open switch in the selector causing neutral disconnect that physically removes power from the transmission solenoids 1 to 4 and electric modulating valves 5 and 6). Three switches in the range selector, labeled D6, D4, and D3 on the electronic control system, are used to select one of the four available positions. When selecting a particular range, a switch for the specific position is closed. When first range is selected, both the D4 and D3 close. All forward range switches are open in neutral and reverse.

Manual override

Figure 2–7 shows the manual override unit. This feature allows operation of the vehicle with *limited* capability if the electronic control fails to operate. Reverse, neutral, or third forward is selected through movement of the selector lever. Manual override is entered by disconnecting the P3 and P4 wiring harness at the electronic control and connecting the corresponding connectors to the manual override enclosure at the appropriately labeled connectors, J3 and J4. This is covered in detail in the troubleshooting section.

Forward manual override

When selecting D6 range, the D6 contacts are closed. The D6 contacts are open in all other forward ranges. In manual override, the D6 contacts energize the third range.

Reverse manual override

When selecting reverse range, the reverse contacts are closed. The reverse contacts are open in all forward ranges and neutral. In manual override, the reverse contacts energize reverse range.

Pump mode switch

The pump mode switch controls a normally *open* ground circuit. When the truck is in normal ROAD operation, the switch is open. When the switch is selected, the completed ground circuit signals the controller to enter PUMP mode operations.

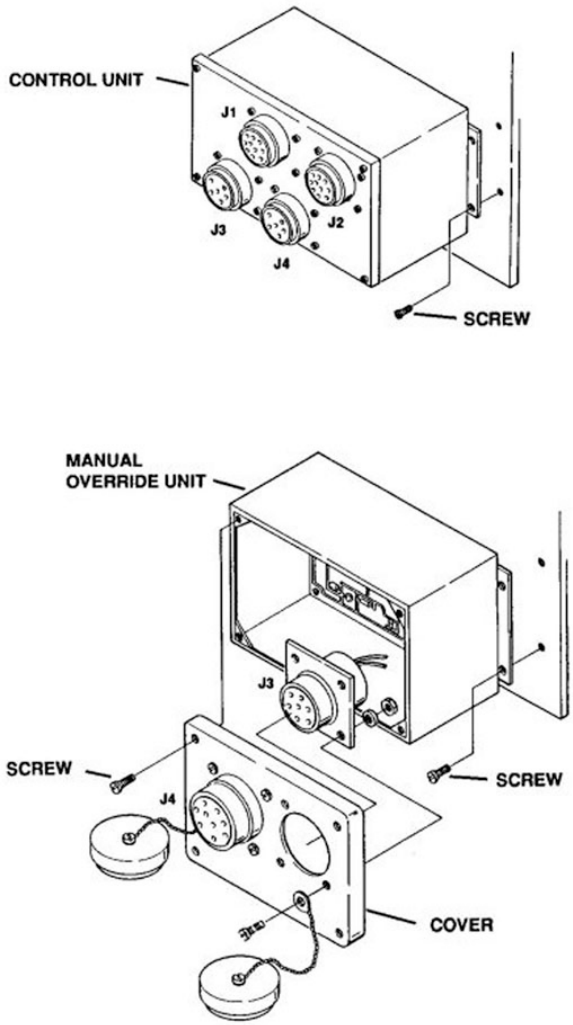

Figure 2–7. Control units.

Stationary select switch

When in the STATIONARY mode, the stationary select switch is open. This action interrupts the current path to all of the six transmission solenoids. The stationary disconnect switch is wired in series with the neutral disconnect switch.

Diagnostic test switch and connector

The electronic control module (ECM) diagnostic test switch is a separate connector that leaves the test port normally open for the OPERATING mode, but is used to connect a normally closed pushbutton switch to the test port to signal diagnostic test when closed.

NOTE: Do not put the diagnostic test switch in the TEST mode while operating the vehicle in the normal ROAD mode. The reason is the transmission runs a constant diagnostic while the vehicle is operating, which could cause significant transmission damage.

Turbine speed sensor

Mounted on top of the transmission housing is the turbine speed sensor. It senses torque converter output speed for engagement of the lockup clutch. The power divider output speed is also compared with the transmission output speed to determine engagement of the differential lock and for the protection for the clutch protection in first-gear range.

Transmission speed sensors

Two separate speed sensors read transmission output speed. The rear transmission output speed sensor is identified as #1 and the front transmission output speed sensor is identified as #2. The electronic control system compares the transmission output speed with the output speed of the power divider to determine engagement of the differential lock clutch in the first-gear range. The electronic control system monitors both output speed sensors. There are two sensors in case one of the output speed sensors fails. Additionally, there is one speed sensor that reads the transmission input speed. This sensor is located at the top of the transmission.

Accelerator potentiometer

The accelerator potentiometer senses accelerator pedal position to enable the control unit to select shift speeds and the clutch engagement sequence in ROAD mode. The potentiometer also senses accelerator pedal position for control of the modulating clutch engagement during PUMP mode operation.

Display

A liquid crystal display (LCD) indicates transmission range during the NORMAL mode of operation. Additionally, the LCD provides status codes in both the OPERATIONAL and DIAGNOSTIC modes.

Solenoids and electric modulating valves

Solenoids (S1, S2, S3, S4, SD, and SP) and electric modulating valves (M5, M6 ML, and MI) are used for controlling clutch engagement. The solenoids are on/off devices that energize when supply voltage is applied across them. When a solenoid is energized, oil at the main pressure is supplied to engage a particular clutch pressure. The resistance of a 12-VDC solenoid is 8 to 16 ohms. The resistance varies depending on temperature. These solenoids are not polarity sensitive.

The electric modulating valves vary the pressure to the clutch by varying current through the coil of the solenoid. As the current increases, the pressure increases. The current varies between 0 and 1.0 amps. The resistance of the coil is 5 to 8 ohms. The resistance varies depending on temperature. The modulating valves are polarity sensitive. If the polarity is reversed, the voltage changes, but the pressure remains at zero. Reverse polarity does not damage the valve.

Self-Test Questions

After you complete these questions, you may check your answers at the end of the unit.

010. General information

1. What type of engine does the P-23 have?

2. What is the capacity of the P-23 water tank?

3. How fast will the P-23 accelerate?

4. What is the top speed on the P-23?

5. What percent grade can the P-23 climb?

011. Transmission

1. What type of transmission does the P-23 have?

2. What does the electronic control unit do?

3. What are the two main modes of transmission operation?

4. What gear ranges does the transmission automatically progress through in the D6 position?

5. What gear does the transmission start when in CRASH mode?

6. What are the lubrication capacities of the transmission?

7. What type of lubricant does the transmission use under normal weather conditions? Under cold weather conditions?

8. How many and what type of pumps circulate oil to lubricate the power divider?

012. Power divider/torque converter

1. Where is the power divider/torque converter mounted?

2. What are the two separate drives of the power divider/torque converter?

3. What pump circulates oil through the power divider/torque converter and transmission?

4. What controls the agent pump speed?

5. The modulating clutch connects to which housing?

6. What is meant by the term *modulating*?

7. The modulating clutch is fully engaged when?

013. Characteristics of the electronic control system

1. What is the voltage input for the controller?

2. What ensures transmission is in neutral?

3. How is redundant neutral maintained?

4. How many switches are in the range selector?

5. When are the forward switches open?

6. What is the purpose for the manual override?

7. What must you do to enter manual override?

8. When is the pump mode switch open?

9. Where is the turbine speed sensor located?

10. Where are the transmission speed sensors located?

11. What is the reason for two transmission speed sensors?

12. What does the accelerator potentiometer do?

13. What two functions does the display perform?

14. What is the resistance of the 12-VDC solenoids?

15. What causes a variance in the resistance of the solenoids?

16. What happens if the polarity is reversed on the modulating valve?

17. What damage will be caused by reversing the polarity on the modulating valve?

2–2. P-23 Firefighting Truck Maintenance

Now you are ready to learn some troubleshooting and repair procedures. This course is not intended to be a substitute for the TO. So, remember to refer to the appropriate TO when troubleshooting the P-23 systems. This section covers the troubleshooting and repair of the transmission and electronic control components. Additionally, this unit covers the dispensing system components and repair.

014. Troubleshooting and repairing

Troubleshooting the transmission is relatively simple. In fact, the onboard computer equipped with a built-in diagnostic program can do most of it. The transmission continually runs a test routine while the vehicle is in operation, checking for faults in the system. If any faults are detected, the corresponding code is displayed in the LCD on the dash, which also serves as the transmission gear indicator. The important thing is to know what the codes are and whether or not manual override is allowed for the indicated code. When you enter the test program, it starts with Test 1 (T1). T1 begins each time you start the vehicle. The purpose of this test is to prevent any damage to the transmission in the event there are any faults in the transmission circuitry.

NOTE: Several tests require you to install pressure gauges in the appropriate test port to verity pressure and application of the clutches.

Power-up status codes

The following table shows some status codes you might encounter. They fall under the categories of power-up status and vehicle operation status.

Power-up Status Codes	
Status Codes	**Explanation**
I	Indicates there is an internal defect with the control circuitry. This includes the 12 and 13 codes, which means no computer control shifts are allowed. The transmission remains in computer neutral and you must replace the control unit. Manual override may be used.
PP	Indicates voltage supply has dropped below 10.4 VDC for more than 0.1 second. 10.4 VDC is necessary to sustain the outputs. Electronic control goes to computer neutral. Manual override is *not* allowed. **NOTE:** A voltage dropping below 10.4 VDC for longer than 0.1 seconds followed by the restoration of voltage above 10.4 VDC causes the electronic control unit to repower to neutral. If the range selector is in forward or reverse, a “LN” code appears.
LN	Indicates the gear selector lever is in either the forward or reverse gear range during power up. To clear this code, you simply put the gear selector in neutral before attempting to start the vehicle. [See note for PP code.]

Vehicle operation (S or M status codes)

During the operation of the vehicle, the control unit runs a continuous test routine. If the control unit detects a fault, the LCD displays the corresponding code. Depending on the code, limited or no vehicle operation will be allowed.

This code indicates there is an open or short in the solenoid circuit. An open in a solenoid circuit is identified with the appropriate status code whenever the transmission is in a range where the specified solenoid is normally de-energized. A short in the solenoid circuit is identified when the appropriate solenoid is normally energized. The S or M is located on the left digit of the display and the identifier of the solenoid is defined as follows for the various status codes possibilities.

S1, S2, S3, S4, M, M6 status codes

Upon identification of a short or an open circuit with the above solenoids, the corresponding code displays and computer neutral is maintained. No more computer-controlled shifts are allowed. Possible transmission lockup could occur from opposing clutches being energized, therefore, manual override is not allowed.

SD status codes

SD status codes indicate a fault in the differential lock solenoid circuit. If the differential lock solenoid or circuit is shorted to a power source, shorted to the chassis, solenoid internally shorted in any operating mode, or an open circuit in DRIVE mode or PUMP mode, the status code displays but normal operation continues.

ML status codes

ML status codes indicate a fault in the lockup electric modulating valve circuit. If the lockup electric modulating valve or circuit is shorted to a power source or is open, the status code displays and computer neutral is maintained. If the electric modulating valve or circuit is shorted to the chassis or has an internal short, the status code displays and operation continues using alternate shift tables without lockup. Manual override is not allowed, as possible lockup damage may occur.

MI status code

This code indicates a fault in the converter electric modulating valve circuit. If the converter modulating valve or circuit is shorted to positive power and unable to disengage, the status code displays. Normal operation can continue in ROAD mode only. PUMP mode is not available and will

cause computer neutral if you attempt to engage the pump. If the converter electric modulating valve is shorted to the chassis, or internally shorted in any mode of operation, or open in the DRIVE mode or PUMP mode, the status code displays and immediate computer neutral is imposed. Manual override is not allowed.

In addition to T1, which occurs during power up, you can also perform eight additional tests (T2 through T9) by entering the test program. To enter the main menu, depress the diagnostic test pushbutton. The display cycles from T1 through T9 then starts at T1 again. To select the desired test, wait until the symbol for the desired test appears in the display and then depress the diagnostic test pushbutton. This enters the desired test. Shown in the following table are tests 2 through 9.

TEST	INDICATED BY	DESCRIPTION
2	T2	RANGE SELECTOR TEST
3	T3	INPUT SWITCH TEST
4	T4	ACCELERATOR POTENTIOMETER CALIBRATION
5	T5	SPEED SENSOR INTEGRITY TEST
6	T6	SOLENOID INTEGRITY TEST
7	T7	SOLENOID POWERED TEST
8	T8	MODULATED SOLENOID POWERED TEST
9	T9	STALL CHECK

WARNING. During the operation of T9, it is necessary to have all personnel and any obstacles clear of the vehicle. If brake failure occurs, the transmission accelerates in fifth gear range. Depressing the diagnostic test pushbutton switch, turning the vehicle power off, or selecting neutral stops operation.

015. Dispensing system components and repair

The P-23 dispensing system is very similar to other fire-fighting vehicles. At the same time, it has some systems that are vehicle specific and very different from what you have serviced in the past. In this lesson, we look at many old familiar components and some that are newer than what you have seen previously.

Illustrated in figure 2–8 is a diagram of the P-23 agent piping system. The system consists of the following components:

1. Fiberglass water tank—3,300 gallon.
2. Stainless steel foam tank—500 gallon.
3. System piping.
4. Agent water pump.
5. Water pressure regulator system.
6. Foam proportioning system.
7. Control system and instruments.

The tanks are located in the body section of the vehicle. A PTO from the power divider/torque converter drives the agent pump. The agent pump pumps the water and foam through the system to the discharge outlets. A multimetering valve automatically and uniformly proportions water and foam concentrate selectively for the roof turret, bumper turret, and handline nozzles through fixed orifices.

This design allows the truck to operate and perform its function without interruption. This can be done while the truck is moving in either direction, standing still, or maneuvering in difficult terrain.

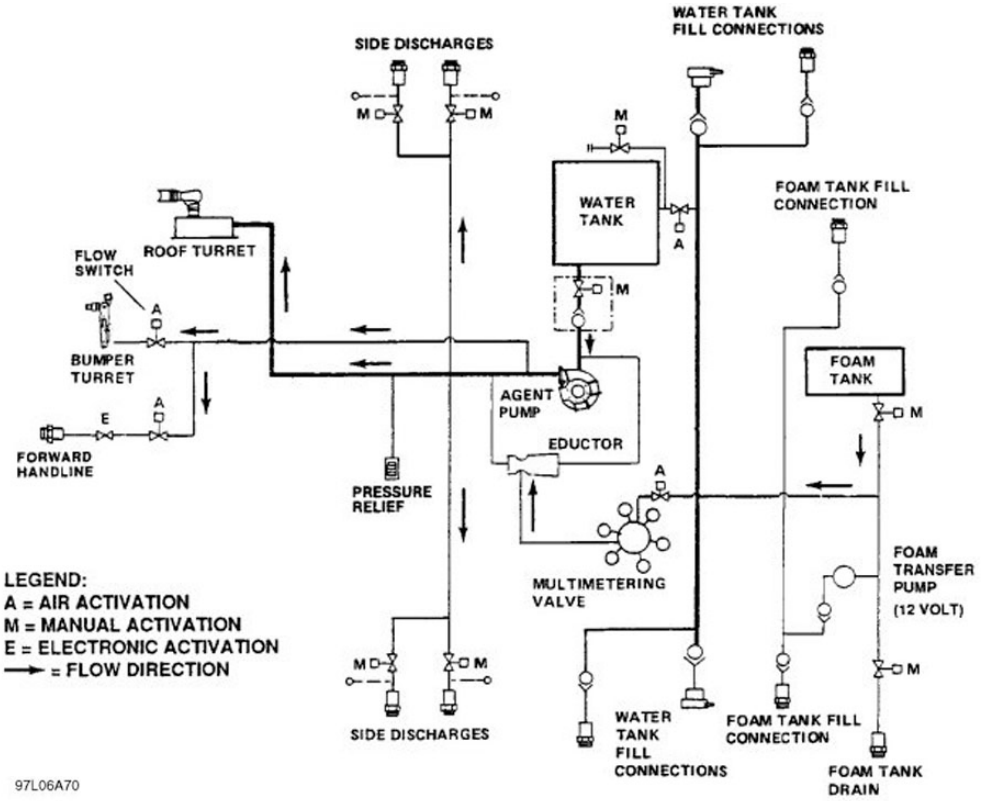

Figure 2–8. Agent piping.

Figure 2–9 shows the agent air system. As you can see, pump pressure is controlled by agent pressure in the piping, electrical components, air components, and mechanical means. All of these must work together to maintain proper system operation. You put the vehicle in the PUMP mode by placing the pump switch in the ON position. When you do this, you complete a ground for the conversion relay from the transmission control module (TCM). At the same time, the PTO is energized to engage the agent pump and the throttle solenoid is energized to increase the engine rpm. As the water pressure increases in the piping, it closes a 20-psi pressure switch. This switch takes the vehicle out of the PUMP mode if the water pressure drops below 20 psi. You then adjust the manual air pressure regulator on the console between the driver seat and the turret operator. Doing this establishes the desired system pressure. The pressure transducer and the electronic pressure regulator (EPR) work together to maintain the set pressure. The pressure transducer, located in the roof turret piping behind the L/H discharge panel, senses pump pressure and converts it to electrical voltage. The pressure transducer then sends the electrical voltage to the EPR (also known as a *piezo valve*). The pressure transducer is calibrated to the EPR, which is located inside the shift tower console. The EPR receives this voltage and provides counter air pressure to the pump throttle cylinder to adjust engine rpm to maintain desired pump pressure.

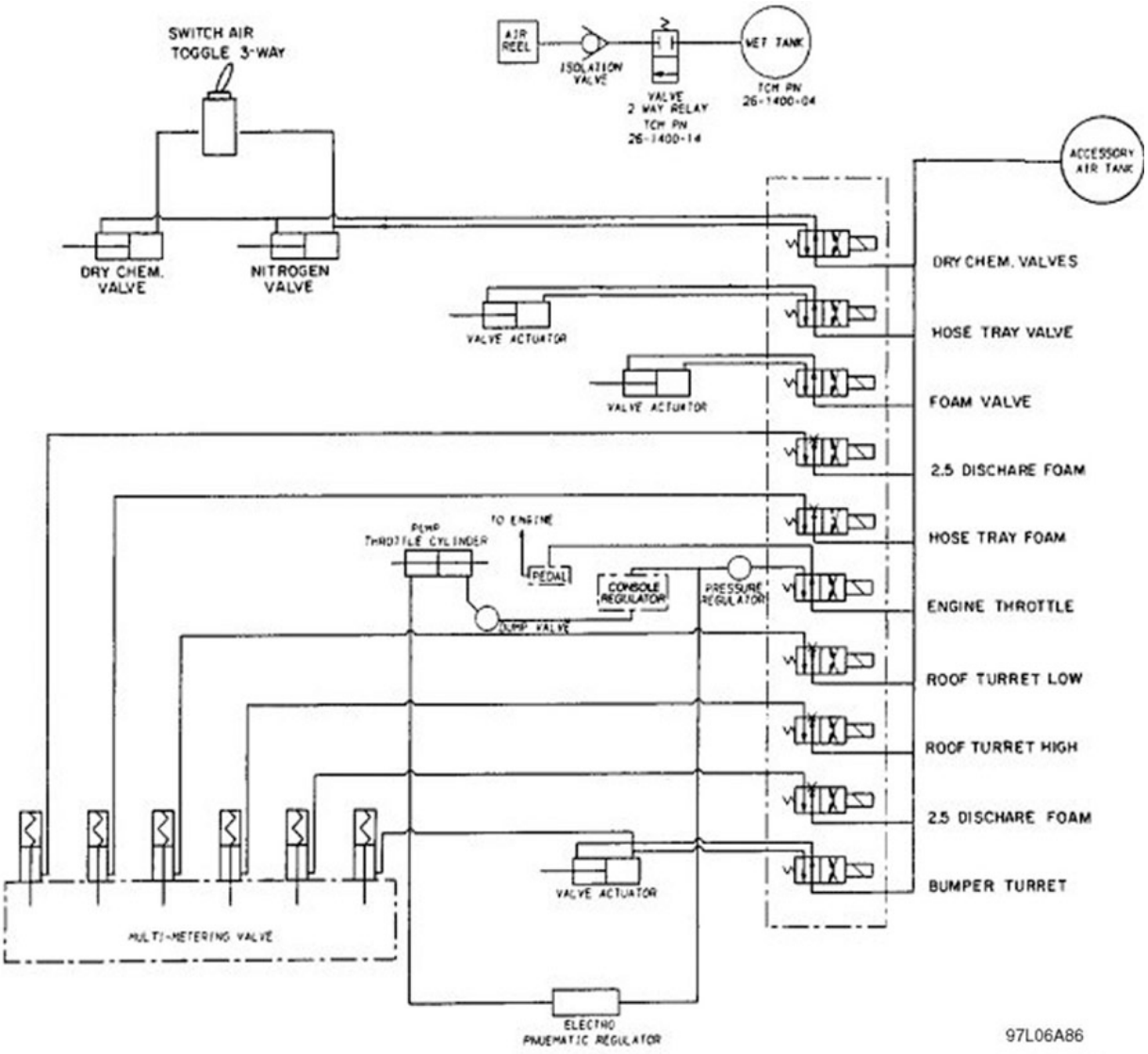

Figure 2–9. Agent air system.

Turrets

Turrets are two of the water discharge points on the P-23. The P-23 has a roof turret and a bumper turret to discharge water. Akron Brass and Feecon are the two manufactures that currently provide turrets for the P-23. Akron Brass is the most commonly used roof turret used on the P-23.

Roof turret

The roof turret of the P-23 is a single barrel, non-aspirating, constant flow, variable stream nozzle located on the roof of the cab. Early models of the P-23 are equipped with Feecon roof turrets; the later models are equipped with Akron Brass roof turrets. Both roof turrets have a discharge rate of 750 gpm in low flow and 1,500 gpm in high flow. The discharge pressure of the Akron Brass is 180 psi. The Feecon turret has a discharge pressure of 200 psi.

The turret travel limits, discharge patterns, and roof turret control handles differ in the Feecon and Akron Brass applications. Figure 2–10 shows the travel limits for the Feecon. Figure 2–11 illustrates the Feecon turret control handle. Figure 2–12 shows the Akron Brass travel limits and discharge patterns, while figure 2–13 shows the control handle.

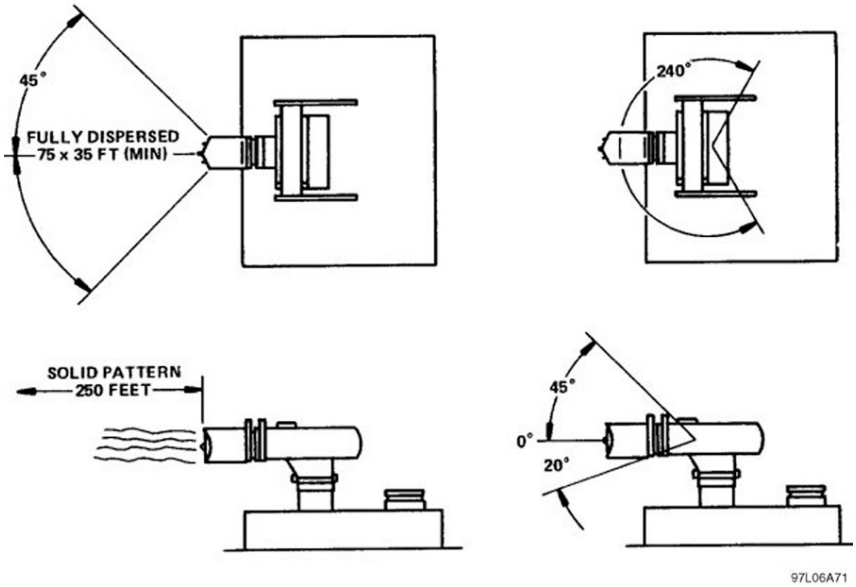

Figure 2–10. Feecon roof turret travel limits.

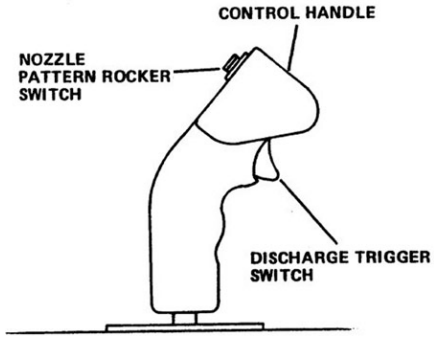

Figure 2–11. Feecon roof turret control handle.

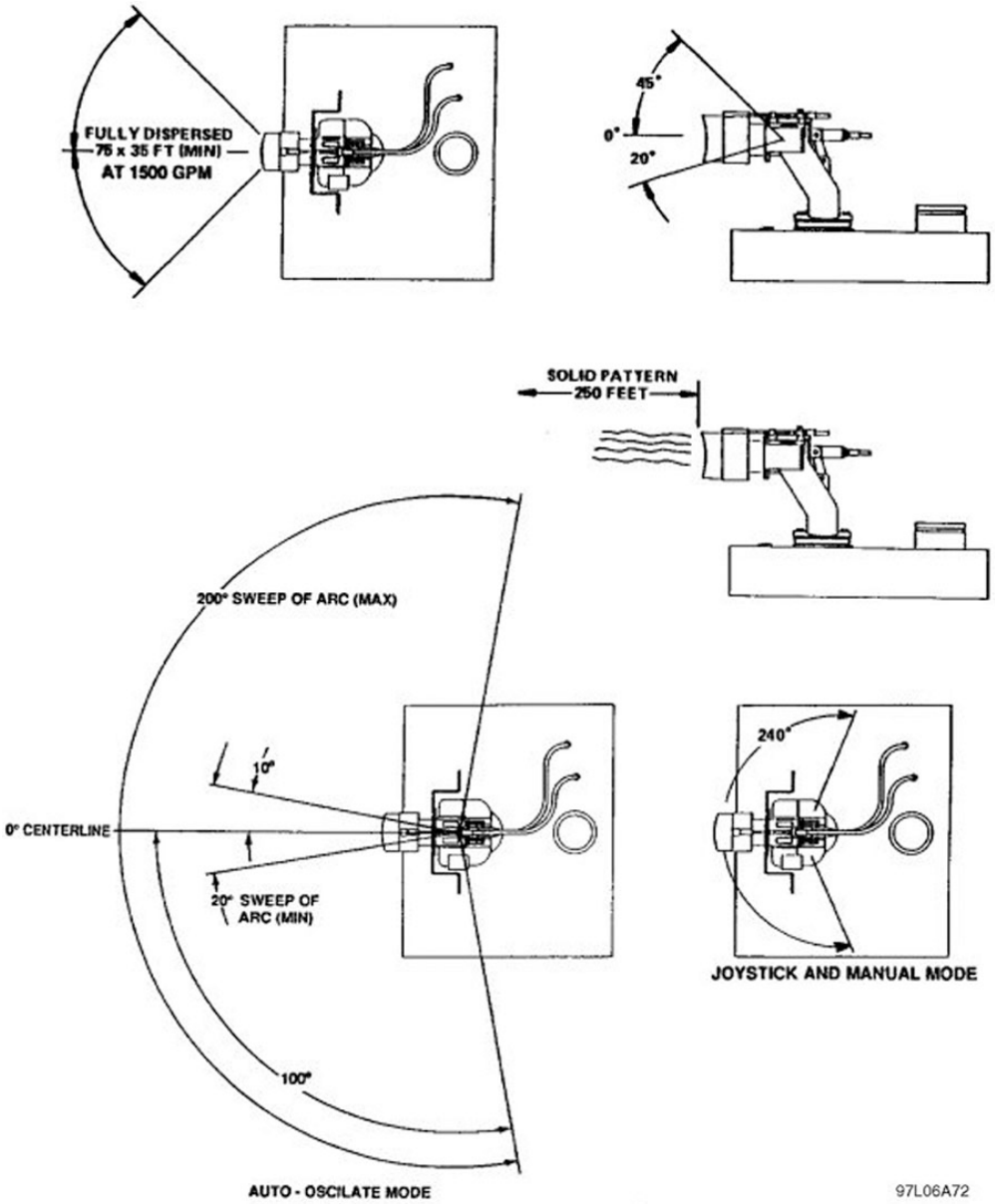

Figure 2–12. Akron Brass roof travel limits.

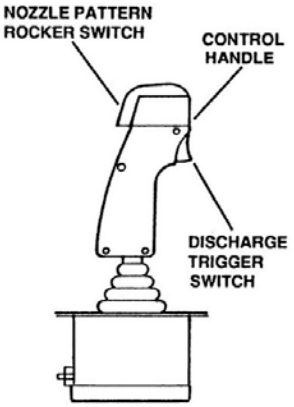

Figure 2–13. Akron Brass roof turret control handle.

Both types of roof turrets have three modes of operation—AUTO-OSCILLATING, ELECTRONIC JOYSTICK, and MANUAL. The discharge pressure of the Akron Brass is 180 psi. The center console and the two types of joysticks are shown in figure 2–14. The location of the joystick is between the driver seat and the turret operator. Electronic operation is the same for both turrets. Both control handles are a pistol-grip-type with an index finger-operated button to open and close the turret discharge valve. A thumb-operated rocker switch on the joystick provides variable pattern control so you can change from solid stream to disperse or vice versa.

In the event of electrical or air system failure, the turrets can be positioned manually using the mechanical handle stored next to the turret operator's seat. The controls for pattern control and discharge are located on the roof panel, which the operator can now control manually.

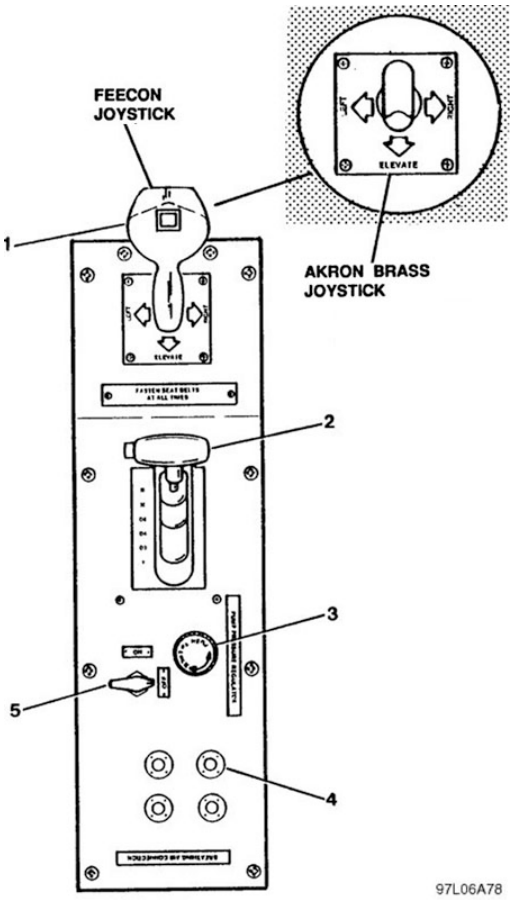

Figure 2–14. Center console.

Bumper turret

The bumper turret is a single barrel, non-aspirating, constant flow, variable stream nozzle mounted in the center front face of the cab. Figure 2–15 shows an exploded view of the turret. This turret has a discharge rate of 250 gpm at 200 psi. It has a minimum straight stream capability of 150 feet and a minimum disperse pattern of 75 by 35 feet. The bumper turret may be elevated to achieve these distances.

The bumper turret has two modes of operation—auto-oscillation and joystick. Unlike the roof turret, the bumper turret has no manual operation capability. In the event of electric or air system failure, the seriously operationally limited (SOL) provision must be used if you want to use the bumper turret manually. The joystick controls all turret functions (fig. 2–16).

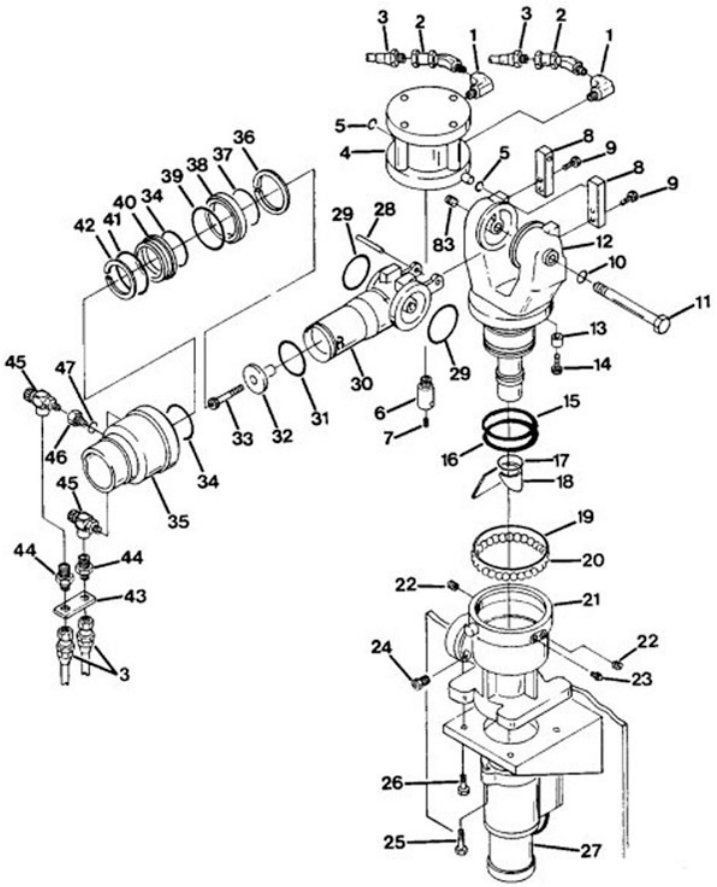

Figure 2–15. Bumper turret.

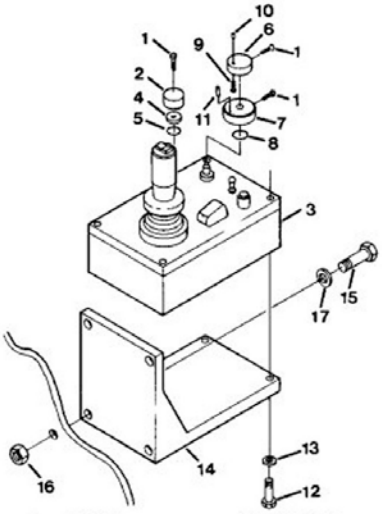

1. SCREW
2. HORIZONTAL SPEED CONTROL KNOB
3. CONTROL BOX
4. SPACER
5. O-RING
6. OSCILLATING CONTROL KNOB (RIGHT LIMIT)
7. OSCILLATING CONTROL KNOB (LEFT LIMIT)
8. O-RING
9. SCREW
10. ROLL PIN (RIGHT LIMIT)
11. ROLL PIN (LEFT LIMIT)
12. SCREW
13. WASHER
14. MOUNTING BRACKET
15. SCREW
16. NUT
17. WASHER

Figure 2–16. Bumper turret controls.

Figure 2–17 is a panel view of the joystick. As you would expect, the joystick allows directional movement of the turret. It also allows for pattern selection using a rocker switch mounted on the top of the joystick. Using the button switch, located at the front of the joystick, controls agent discharge. When pressed, the button switch allows the agent to discharge. Releasing the button stops the agent discharge. (The button switch functions like an interrupt switch.)

As with the roof turret, the bumper turret has travel limits and specific discharge patterns (fig. 2–18).

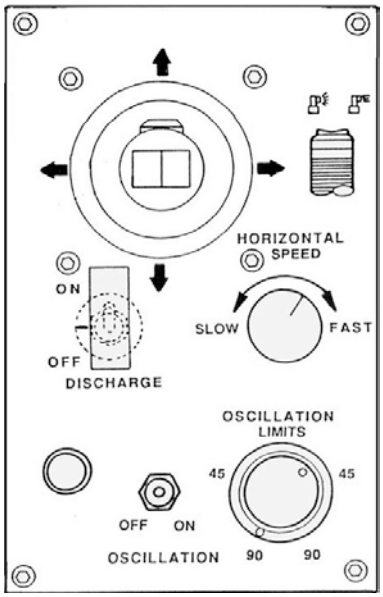

Figure 2–17. Bumper turret control box.

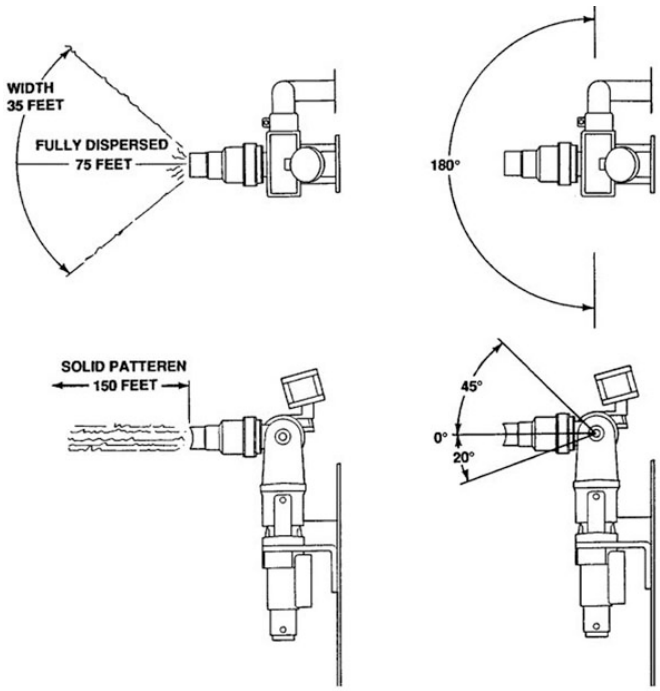

Figure 2–18. Travel limits.

Forward hose compartment

The forward hose compartment (fig. 2–19) is stowed in a slide-out hose tray at the front of the cab. The handline connects to the piping and receives its agent supply from the bumper turret discharge system. Agent is supplied to the handline nozzle when the hose tray is pulled out and either of the two front hose charge switches (on the emergency system control panel in the cab or at the front of the cab) is placed in the ON position. The hose required for the hose tray is 200 feet of 1.75-inch diameter. This hose is not a basic issue item supplied with the vehicle; instead, the using organization must furnish this hose. When using the forward hose tray, remove all of the hose from the compartment before the hose is charged. This requirement is for obvious reasons; imagine 150 feet of collapsed hose suddenly and rapidly filling with agent. The possible injuries the handline operator might sustain and the type of damage that would occur to the vehicle could indeed be disastrous. To prevent accidental discharge, a dual indicator alerts the driver in the event the hose tray is not fully closed, or if the discharge valve is open prior to pulling out the hose tray. The reason for this is that a lever-actuated interlock switch prevents system operation when the hose tray is closed.

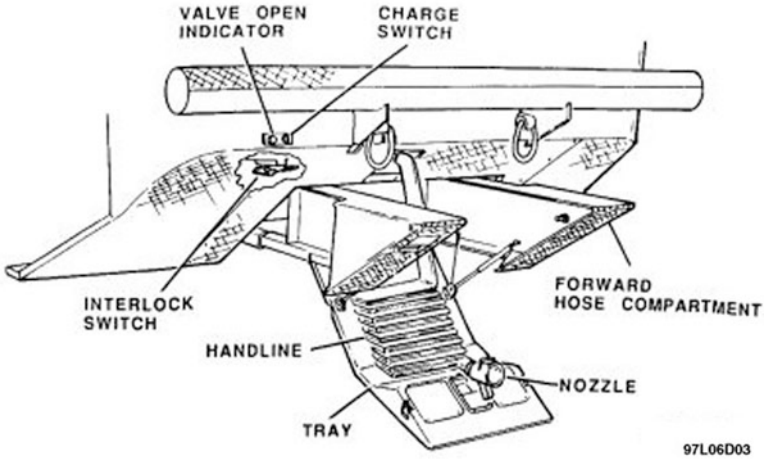

Figure 2–19. Forward hose compartment.

Additional system components include the discharge (ball) valve, air-operated valve actuating cylinder, and a flow switch. The flow switch prevents the multimetering valve from injecting foam into the system when the volume of water discharged is too low for efficient foam dispersal.

Foam proportioning system

The P-23 foam proportioning system works similar to the P-19 we discussed earlier. It also uses the same type of components (i.e., a multimetering manifold and inductor/eductor). The multimetering manifold uses six ports (or orifices) to induct foam into the system. This depends on which discharges are in operation. The possible discharges are as follows:

1. One for the bumper turret.
2. One for the handline.
3. Two for the roof turret (one high discharge, one low discharge rate).
4. Two for the side discharge (one for each side).

As more discharges open in the FOAM mode, more foam is introduced into the system to maintain the correct percentage of foam for firefighting operations.

The foam proportioning system is called “around the pump.” In this type of system, foam passes from the foam tank through the multimetering valve (manifold), and is then introduced into the system at a single eductor located in the water bypass loop. Water suction draws foam into the system, then

through the water pump to the discharge outlets. This type of system accurately discharges metered foam through fixed orifices at a rate of no less than 2.8 percent and no more than 3.5 percent. You can convert the system to discharge 3 or 6-percent foam ratios by simply changing the internal metering plate. The vehicle comes with the 3-percent plate installed and the 6-percent plate is shipped along with the vehicle.

Part of the foam proportioning system is the foam transfer system. This system allows the operator to transfer foam in one of these three ways:

1. Fill the foam tank with agent from a bulk source.
2. Transfer foam from the foam tank to a storage tank.
3. Transfer foam from one source to another external source by opening the appropriate valves.

The foam tank fill operation, as well as the transfer operations, can be done from either side of the vehicle. The foam transfer pump, rated at a maximum of 75 gpm, is a gear-type pump.

The agent pump of the P-23 is a Hale Model 60 FCG, single stage, centrifugal pump capable of delivering 2,000 gpm at 2,100 rpm. Shown in figure 2–20 is a cutaway view of the pump. The internal workings of the pump are the same as the pump on the P-19 fire truck. If you have a good understanding of that pump, this one is no different.

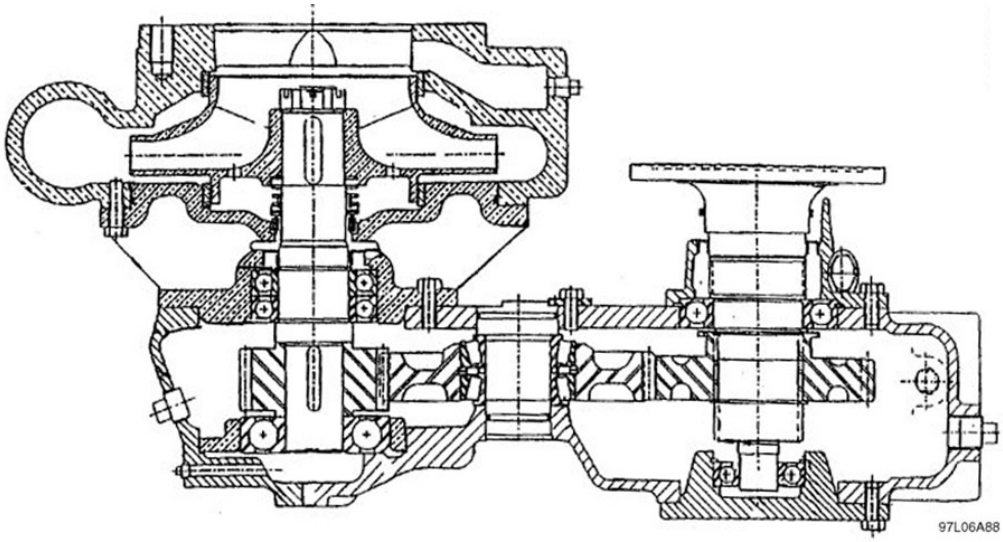

Figure 2–20. Agent pump.

Figures 2–21 and 2–22 are exploded views showing the components of the agent pump. The agent pump has a single impeller (single stage), which draws the water from the water tank; when the agent pump, is engaged the pump sends agent out into the piping under pressure. Pressed into the pump head and the volute are wear rings, which provide a labyrinth seal for the impeller. The tolerances are very close (.002 to .010 of an inch), between the wear rings and the impeller, to prevent any aeration of the water, which can cause surges in the dispensing system and abnormal pressure readings. If the wear rings are worn, it is easier and more cost efficient to replace the wear rings than either the pump head, or the volute, or both. To provide a seal, the pump uses a mechanical seal. This type of seal has no leak rate. If there is any agent leaking from the pump around the pump shaft, you must replace the seal (there are no adjustments). Installed into the pump housing is a thermal relief valve, which is set a 320 psi/170°F. The relief valve protects the system against over pressurization and excess heat generated if the pump is deadheaded (pump engaged not discharging) for any length of time.

NOTE: Deadheading the system to adjust the pressure is all right since it takes only a very short time.

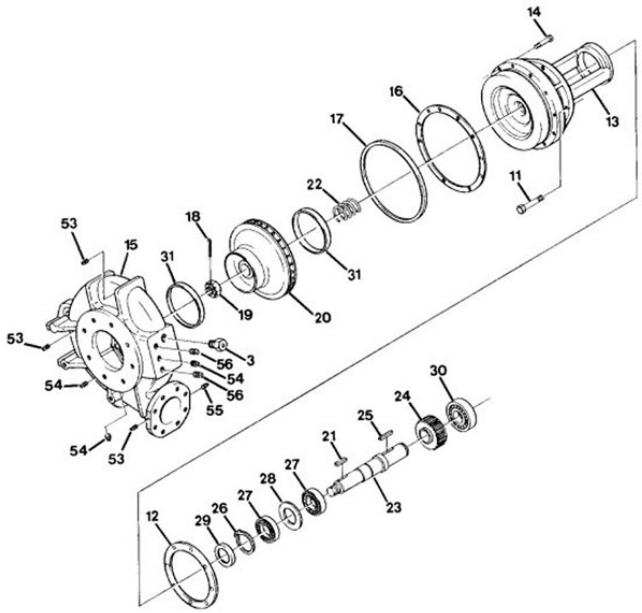

Figure 2–21. Agent pump components.

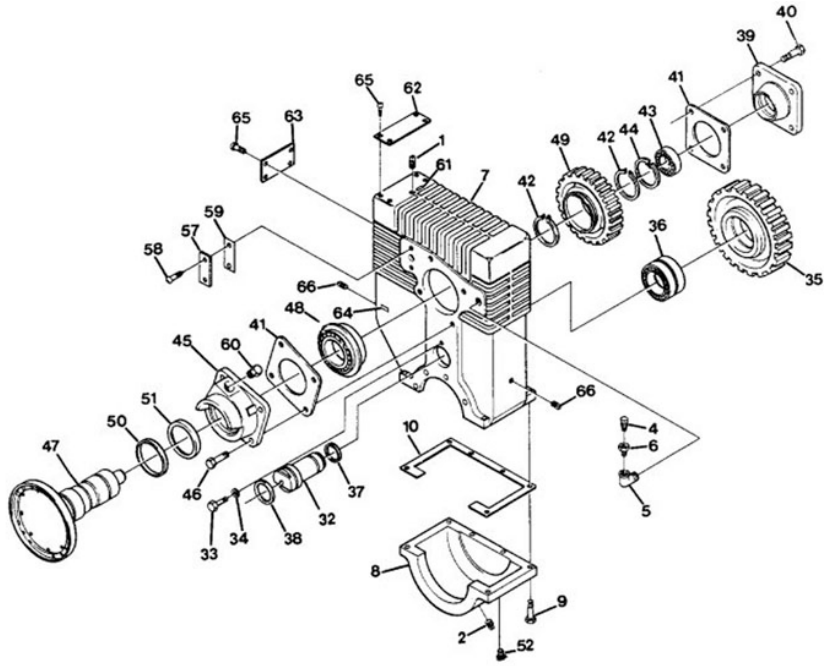

1. FILL PLUG
2. DRAIN PLUG
3. RELIEF VALVE
4. VENT
5. ELBOW
6. BUSHING
7. HOUSING
8. COVER
9. CAPSCREW
10. GASKET
11. CAPSCREW
12. GASKET
13. REAR BEARING HOUSING
14. CAPSCREW
15. VOLUTE
16. GASKET
17. O-RING
18. PIN
19. IMPELLER NUT
20. IMPELLER
21. KEY
22. SEAL SPRING SEAT AND ASSEMBLY
23. SHAFT
24. GEAR
25. KEY
26. RETAINING RING
27. BEARING
28. SHIM
29. SEAL
30. BEARING
31. CLEARANCE RING
32. INTERMEDIATE SHAFT
33. CAPSCREW
34. WASHER
35. INTERMEDIATE GEAR
36. TAPERED BEARING ASSEMBLY
37. O-RING
38. O-RING
39. REAR BEARING COVER
40. CAPSCREW
41. GASKET
42. RETAINING RING
43. BEARING
44. RETAINING RING
45. BEARING CAP
46. CAPSCREW
47. SHAFT
48. BEARING
49. SLIDING GEAR
50. OIL SLINGER
51. OIL SEAL
52. PLUG
53. BRASS PLUG
54. BRASS PLUG
55. BRASS PLUG
56. BRASS PLUG
57. SEALING FLANGE
58. CAPSCREW
59. GASKET
60. PLUG
61. OIL FILL TAG
62. PLATE
63. PLATE
64. OIL LEVEL TAG
65. SCREW
66. PLUG

Figure 2–22. Agent pump components (cont'd).

Dry chemical system

The P-23 has a dry chemical system that is completely separate from the water and foam fire-fighting systems. Shown in figure 2–23 is a drawing of the dry chemical system and its components. The dry chemical system can be used at any time. This system does not require the engine or water pump to be running. The system discharges potassium bicarbonate (PKP) fire-extinguishing agent. As you can see in figure 2–24, the dry chemical system consists of the following:

1. A 500-pound-rated steel dry chemical storage tank located in the forward body section of the trucks
2. A 300-cubic foot capacity expellant (nitrogen) cylinder stored in a side compartment.
3. 150 feet of 1-inch hose on a hose reel located in the rear section of the right side hose reel compartment

Additionally the dry chemical system incorporates a pressure regulator, various control valves, and associated plumbing. Any time you perform any type of maintenance on the system use extreme caution, since part of the system has very high pressure. The maximum pressure for the nitrogen tank is 2,400 psi at 70°F. Should the pressure drop below 1,750 psi the cylinder should be serviced or replaced.

WARNING: Dropping a charged cylinder may cause *injury* or *death*. For this reason, any time you remove or install the nitrogen tank, you must install the shipping cap.

To prevent over pressurization, the system uses a high-pressure relief. The relief valve is set at 3,300 psi. A pressure regulator drops the high-pressure nitrogen to a system pressure of 220 to 240 psi. This is the normal operating pressure for the system. The regulator has an internal relief valve set at 400 psi to prevent damage.

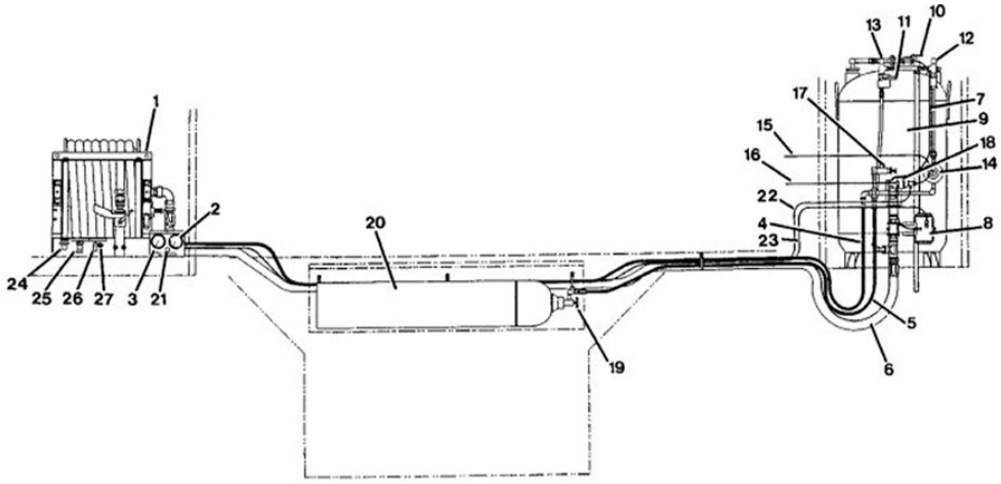

1. DRY CHEMICAL HOSE REEL
2. DRY CHEMICAL SYSTEM PRESSURE GAGE
3. NITROGEN PRESSURE GAGE
4. NITROGEN FILL/GAGE LINE
5. NITROGEN SUPPLY LINE
6. DRY CHEMICAL HOSE ASSEMBLY
7. DRY CHEMICAL PRESSURE LINE
8. DRY CHEMICAL PRODUCT VALVE
9. DRY CHEMICAL TANK
10. TANK BLOWDOWN VALVE
11. HOSE BLOWDOWN VALVE
12. CHARGE VALVE
13. CHECK VALVE
14. PRESSURE REGULATOR
15. AIR LINE, PORT A1 ON AIR MANIFOLD TO DRY CHEMICAL SYSTEM
16. AIR LNE FROM PORT B1 ON AIR MANIFOLD TO DRY CHEMICAL SYSTEM
17. RELIEF VALVE (HIGH PRESSURE)
18. NITROGEN ACTUATION VALVE
19. NITROGEN CYLINDER VALVE (HANDWHEEL)
20. NITROGEN CYLINDER
21. NITROGEN RECHARGE CONNECTOR
22. AIR LINE TO PRODUCT VALVE SWITCH
23. AIR LINE FROM PRODUCT VALVE SWITCH
24. REWIND BUTTON
25. PRODUCT VALVE SWITCH
26. DRY CHEMICAL CHARGE SWITCH
27. INDICATOR LIGHT

97L06A57

Figure 2–23. Dry chemical system.

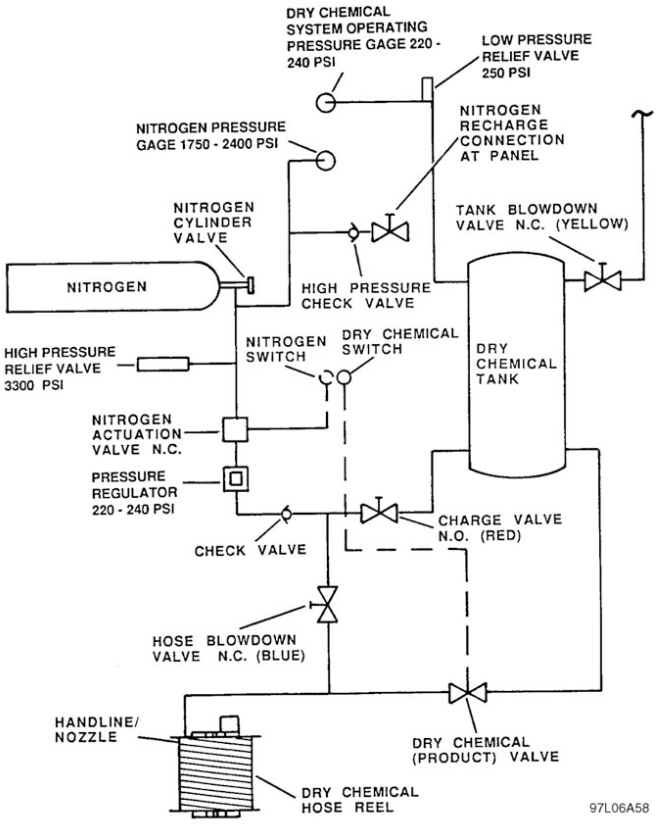

Figure 2–24. Dry chemical system schematic.

The nitrogen actuation valve controls the nitrogen actuation to the pressure regulator. The actuation valve is a normally closed valve controlled by the nitrogen charge switch on the hose reel or in the cab. Once the pressure regulator reduces nitrogen pressure, nitrogen passes through a check valve, which prevents dry chemical agent from entering the pressure regulator. From the check valve, the nitrogen flows through the normally open charge valve (manually operated) into the dry chemical tank through two tubes. This action fluidizes the dry chemical agent (it is still in a dry chemical state) for use. From the dry chemical tank, flow is down to the air-operated dry chemical product valve. Once the valve energizes by the activation of the dry chemical switch on the hose reel, the chemical agent enters the dry chemical hose and flows to the dry chemical nozzle, rated at 5.5 to 7 pounds/second.

Self-Test Questions

After you complete these questions, you may check your answers at the end of the unit.

014. Troubleshooting and repairing

1. What does an “I” code indicate?

2. What is the minimum voltage required for the electronic control for the transmission?

3. How is an LN code cleared?

4. Why is manual override not allowed when S1 through S6 code appears?

5. What happens if the SD code appears?

6. If the modulating valve is shorted to a power source, what happens when the ML code appears?

7. Is manual override allowed with an ML code? Why or why not?

8. Can the vehicle be operated if an M1 code appears?

9. What precaution must you take when performing T9?

015. Dispensing system components and repair

1. What is the capacity of the P-23 foam tank?

2. What is used to drive the agent pump?

3. What is used to meter the foam?

4. What happens when you place the pump switch in the ON position?

5. What is the pressure setting for the switch that takes the vehicle out of PUMP mode when the water pressure drops too low?

6. Where is the pressure transducer located?

7. What is another name for the EPR?

8. Where is the EPR located?

9. What type of roof turret does the P-23 have?

10. What is the discharge pressure of the Akron Brass roof turret?

11. What is the discharge pressure of the Feecon roof turret?

12. What are the modes of operation for the roof turrets?

13. Where is the control for the roof turret located?

14. What can be done with the turrets in the event of an electrical failure?

15. What is the discharge rate of the bumper turret?

16. What is the minimum straight stream capability of the bumper turret?

17. The forward hose compartment piping connects to what units?

18. How many feet of hose are required for the hose tray?

19. What precaution must you take before charging the hose?

20. What is the purpose of the flow switch?

21. How many ports does the multimetering manifold have?

22. The P-23 is equipped with what type foam proportioning system?

23. What is the agent flow rate of the foam proportioning system?

24. What type of pump is the foam transfer pump and what is its maximum rating?

25. What type of pump is the agent pump and what are its gpm and rpm ratings?

26. What is the purpose of the wear rings and what are their tolerances to the impeller?

27. What type of seal does the agent pump have?

28. What are the pressure and temperature settings of the thermal relief valve?

29. What is meant by *deadheading* the pump?

30. What agent does the dry chemical system use?

31. What is the capacity of the dry chemical storage tank?

32. What type of expellant does the dry chemical system use?

33. What is the maximum pressure of the nitrogen tank at 70°F?

34. What is the internal relief valve setting of the pressure regulator?

35. What is the rating of the dry chemical nozzle?

Answers to Self-Test Questions

010

1. Diesel engine.
2. 3,300 gallons.
3. 0 to 50 mph in 41 seconds.
4. 72 mph.
5. 50-percent grade.

011

1. Hydraulically-actuated and electrically-controlled power shift unit.
2. Provides automatic shifting and coordinates the functions of the transmission and the power divider/torque converter.
3. ROAD and CRASH mode.
4. Two through six in both up-shift and down-shift operation.
5. Starts in first gear and automatically progresses to the gear range selected.
6. 28 qts of lubricant in the sump with an overall system capacity of 120 qts.
7. HTO 30 wt. under normal conditions; HTO 10 wt. under cold conditions.
8. Two gear-type pumps.

012

1. On the engine flywheel housing of the engine.
2. Agent water pump and main drive to transmission.
3. Modulating clutch oil pump.
4. Speed of the engine.
5. Torque converter rotating housing.
6. Controlled slippage.
7. During mode operation.

013

1. 12 VDC.
2. Computer neutral and redundant neutral.
3. An open switch in the selector causes a neutral disconnect which physically removes power from the transmission solenoids 1 to 4 and electric modulating valves 5 and 6.
4. Three.
5. In neutral and reverse.
6. Allows for the vehicle to be operated with limited capability if the electronic control fails to operate.
7. Disconnect the P3 and P4 wiring harness at the electronic control and connect them to the manual override enclosure at the appropriately labeled connectors J3 and J4.
8. When the truck is in ROAD operation.
9. Top of transmission housing.

10. The rear transmission output speed sensor is identified as #1 and is located towards the front of the vehicle; the front transmission output speed sensor is identified as #2 and located towards the rear of vehicle.
11. In the event of a failure of one of the output speed sensors.
12. Senses accelerator pedal position to enable the control select shift speeds and clutch engagement sequence in ROAD mode. The potentiometer also senses accelerator pedal position for control of the modulating clutch engagement during PUMP mode operation.
13. Provides transmission range and status codes in OPERATIONAL and DIAGNOSTIC mode.
14. 8 to 16 ohms.
15. Temperature.
16. The voltage will change, but the pressure will remain at zero.
17. No damage.

014

1. An internal defect with the control circuitry.
2. 10.4 VDC.
3. Put the gear selector in neutral before attempting to start the vehicle.
4. Transmission lockup could occur from opposing clutches being energized.
5. Status code displays but normal operation continues.
6. The status code displays and the computer neutral is maintained.
7. No; possible lockup damage may occur.
8. Normal operation can continue in ROAD mode only.
9. Have all personnel and any obstacles clear of the vehicle.

015

1. 500-gallons.
2. PTO.
3. Fixed orifices in the multimetering manifold.
4. Completes a ground for the conversion relay from the TCM.
5. 20 psi.
6. In the roof turret piping behind the L/H discharge panel.
7. Piezo valve.
8. Inside the shift tower console.
9. Single barrel, non-aspirating, constant flow, variable stream nozzle type.
10. 180 psi.
11. 200 psi.
12. Auto-oscillating, electronic joystick, and manual.
13. On the console between the driver seat and turret operator.
14. The turrets can be positioned manually using the mechanical handle stored next to the turret operator’s seat.
15. 250 gpm at 200 psi.
16. 150 feet.
17. Bumper turret discharge system.
18. 200 feet of 1.75 diameter hose.
19. Remove all the hose from the compartment.
20. Prevent the multimetering valve from injecting foam into the system when the volume of water being discharged is too low.
21. Six.
22. Around the pump.
23. 2.8.to 3.5 percent.

24. Gear; 75 gpm.
25. Single stage, centrifugal; 2,000 gpm at 2,100 rpm.
26. Provide a labyrinth seal; .002 to .010 of an inch.
27. Mechanical.
28. 320 psi/170°F.
29. Pump is engaged, but not dispensing.
30. PKP.
31. 500 pounds.
32. Nitrogen.
33. 2,400 psi.
34. 400 psi.
35. 5.5 to 7 pounds/second.

Complete the unit review exercises before going to the next unit.

Unit Review Exercises

Note to Student: Consider all choices carefully, select the *best* answer to each question, and *circle* the corresponding letter. When you have completed all unit review exercises, transfer your answers to the Field-Scoring Answer Sheet.

Do not return your answer sheet to AFCDA.

55. (010) The engine on the P-23 fire truck is a
    a. gas engine.
    b. diesel engine.
    c. biofuel engine.
    d. propane engine.

56. (010) What grade can the P-23 climb *without* spilling fluid?
    a. 20 percent.
    b. 30 percent.
    c. 40 percent.
    d. 50 percent.

57. (011) The transmission on the P-23 fire truck is controlled and actuated
    a. electrically and pneumatically.
    b. electrically and hydraulically.
    c. manually and pneumatically.
    d. manually and mechanically.

58. (011) When in the D6 position, how does the P-23 transmission progress through gear ranges two through six in both up-shift and downshift operation?
    a. Manually.
    b. Electrically.
    c. Automatically.
    d. Pneumatically.

59. (011) While stopped, you enter the CRASH mode. In this situation, the P-23 transmission starts in the
    a. D6 gear range.
    b. first-gear range.
    c. second-gear range.
    d. third-gear range.

60. (011) The range selector (modulating) valves for the P-23 transmission are controlled by
    a. on/off solenoids.
    b. normally open solenoids.
    c. current sensitive solenoids.
    d. polarity sensitive solenoids.

61. (012) What P-23 driveline component connects the transmission to the engine flywheel?
    a. Torque converter.
    b. Modulating clutch.
    c. Torque converter through the power divider.
    d. Modulating clutch through the torque converter.

62. (013) Which electrical connectors are used for manual override if the P-23 transmission control unit fails?
    a. T3 and T4.
    b. R3 and R4.
    c. P3 and P4.
    d. A3 and A4.

63. (013) The input voltage to the electronic control system for the P-23 transmission/power divider is
    a. 8 volts direct current (VDC).
    b. 12 VDC.
    c. 18.5 VDC.
    d. 24 VDC.

64. (013) The pushbutton switch for the diagnostic test switch for the P-23 transmission/power divider electronic control module (ECM) is a
    a. series switch.
    b. parallel switch.
    c. normally open switch.
    d. normally closed switch.

65. (013) The P-23 transmission/power divider output speed sensor located at the *rear* of the transmission is identified as
    a. the turbine speed sensor.
    b. the CTI sensor.
    c. sensor #2.
    d. sensor #1.

66. (014) If the voltage on a P-23 fire truck drops below 10.4 volts direct current (VDC) for more than 0.1 seconds, which code appears on the transmission liquid crystal display (LCD) panel?
    a. LN.
    b. PP.
    c. T1.
    d. No code appears.

67. (014) On the P-23 transmission, an LN code during power up indicates the
    a. control unit has an internal malfunction.
    b. voltage has dropped below 10.4 volts direct current (VDC).
    c. gear selector is in forward or reverse.
    d. gear selector is in neutral.

68. (014) While test driving a P-23 fire truck, the liquid crystal display (LCD) on the dash shows an MI code. This indicates a modulating valve is shorted to a power source. In this situation, normal operation can continue
    a. with manual override.
    b. in the STRUCTURAL mode.
    c. in the ROAD mode only.
    d. in all modes of operation.

69. (015) What is the capacity of the water tank on the P-23 dispensing system?
    a. 1,800 gallons.
    b. 2,400 gallons.
    c. 3,100 gallons.
    d. 3,300 gallons.

70. (015) The electronic pressure regulator (EPR) in the P-23 dispensing system is located
    a. in the bumper turret discharge system.
    b. on the inlet side of the pump.
    c. inside the shift tower console.
    d. behind the left-hand discharge panel.

71. (015) What is the discharge pressure of the Akron Brass roof turret used on the P-23 dispensing system?
    a. 220 pounds per square inch (psi).
    b. 200 psi.
    c. 180 psi.
    d. 160 psi.

Please read the unit menu for unit 3 and continue ➔

Unit 3. P-34 Rapid Intervention Vehicle

3–1. P-34 Rapid Intervention Vehicle Fundamentals..... 3–1
016. Dispensing system 3–1
017. Electrical system 3–8
018. The Kovatch RIV air system 3–15
3–2. P34 Dispensing and Electrical System Troubleshooting..... 3–17
019. Dispensing system troubleshooting 3–17
020. Electrical system troubleshooting 3–18

THE P-34 RAPID INTERVENTION VEHICLE (RIV) is the first crash response truck in the Air Force to use ultra-high pressure (UHP) firefighting technology. The P-34 RIV performs more effectively than larger conventional firefighting vehicles and increases the time a truck can remain on scene without the need to resupply.

3–1. P-34 Rapid Intervention Vehicle Fundamentals

The P-34 RIV is capable of being deployed to fire scenes much faster than larger fire trucks, while providing the same or better firefighting capabilities. The firefighting unit is mounted on a Ford F-550 Super Duty chassis, and uses UHP which has been found to increase fire protection effectiveness over conventional methods. UHP dispenses smaller water droplets, dispersing water over a larger area and making more surface contact with less water usage. The RIV is designed to extinguish fires associated with airfield and flight line operations, such as aircraft, aircraft fuel, and weapon system fires. This section covers the fundamentals, repairs, and adjustments of the dispensing and electrical systems on the Pierce Manufacturing RIV. It also covers the air system of the Kovatch RIV.

016. Dispensing system

The main purpose of the RIV lies within the dispensing system. Maintaining the dispensing system to ensure proper function is imperative to successfully supporting flightline operations.

Water tank

The water tank has a 400-gallon capacity. It is constructed using a high-impact copolymer (HIC), noncorrosive, stress relieved thermoplastic, ultraviolet (UV) stabilized for maximum protection. The tank incorporates a manual fill tower with a 4-inch combination vent/overflow pipe. The fill tower is constructed of polypropylene and is large enough to provide filling by means of a conventional 2½-inch hose nozzle. The tower is located near the center of the tank to minimize water surge during vehicle operation. The tower has a removable polypropylene screen and a polypropylene hinged cover. The vent/overflow pipe runs through the tank and exits through the floor of the tank behind the rear axle. The water tank can be filled either through the water tank filler dome at the top of the tank or through a 2½-inch direct tank fill hose connection on the driver side of the vehicle.

Foam tank

The foam tank has a 56-gallon capacity and is constructed of the same noncorrosive material as the water tank. The foam tank fill hose connection and fill valve are located on the driver side of the vehicle inside the lower pump compartment.

Foam pump

The foam pump is a hydraulically driven, self-priming, piston-type foam transfer pump. It is capable of drawing foam liquid concentrate at flow rates up to 10 gpm directly through the pump and loading connection.

Agent pump

The agent delivery fire pump is capable of delivering a minimum of 60 (with a maximum of 100) gpm of water/foam solution at pressures between 1100 and 1500 psi at the bumper turret and 15 gpm between 1100 and 1500 psi at the UHP handline nozzles. This pump is equipped with a low-pressure switch in the pump discharge to shut down pump operation in the event of loss of discharge pressure. The agent pump is capable of providing agent to both the bumper turret and handlines simultaneously. The agent pump is capable of pump and roll operation, independent of vehicle speed, with simultaneous operation of the bumper turret and both handlines.

Bumper turret

The agent delivery bumper turret is capable of delivering UHP water/foam solution at rates from 1100 to 1500 psi at 60 gpm. The bumper turret is controlled by a speed proportion controlled joystick (both horizontal and vertical motion). The bumper turret is capable of automatic oscillation, with an adjustable range of up to 80° each side of center. It is capable of horizontal movement with a range of up to 90° each side of center. The bumper turret has an up and down range from 30° down and 75° up.

Handlines

The P-34 RIV is equipped with two 200 foot UHP handlines with a minimum rating of 1500 psi, equipped with a constant flow, 1500 psi rated pistol grip, shutoff-type nozzles, capable of both fog and straight stream patterns. The handlines are capable of discharging 1100 to 1500 psi of water/foam solution at 15 gpm. They are capable of reaching a distance of 65 feet. Each handline is stored on a reel, one on each side of the vehicle. They can be wound by an electrical switch at the side of each hose reel, or manually using a crank.

Structural pump panel

The structural pump panel (fig. 3–1) provides controls and indicators for various pump and foam system components. It is located on the driver side of the vehicle. The callout numbers and component descriptions further explained in the table following the figure 3–1.

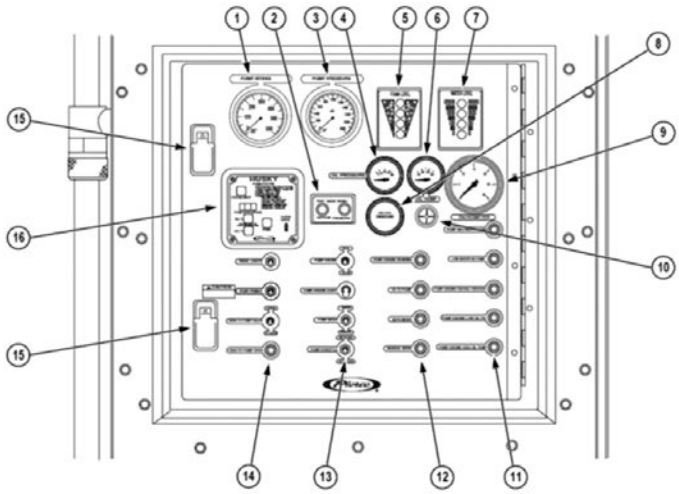

Figure 3–1. Structural pump panel.

Legend for Figure 3–1: Structural Pump Panel		
Callout Number	**Component**	**Description**

Legend for Figure 3–1: Structural Pump Panel		
Callout Number	**Component**	**Description**
1	PUMP INTAKE GAUGE	Displays the pressure (in psi) of the incoming water at the pump intake.
2	TEST GAUGE PANEL	Allows gauges to be connected to the system to test system vacuum and pressure.
3	PUMP PRESSURE GAUGE	Displays the pressure (in psi) of the pump output.
4	OIL PRESSURE GAUGE	Displays the pump drive engine oil pressure (in psi) while the engine is running.
5	FOAM LEVEL INDICATOR	Displays the level of foam concentrate in the onboard storage tank. Uses light-emitting diode (LED) lights to indicate the foam concentrate level as follows: • Full = Four LEDs ON. • 7/8 = Three LEDs ON. • 5/8 = Two LEDs ON, Third LED Flashing. • 1/2 = Two LEDs ON. • 3/8 = One LED ON, Second LED Flashing. • 1/4 = One LED ON. • 1/8 = One LED Flashing. • Empty = All Four LEDs Flashing.
6	OIL TEMPERATURE GAUGE	Displays the pump drive engine oil temperature while the engine is running.
7	WATER LEVEL INDICATOR	Displays the water level in the onboard storage tank. Uses LED lights to indicate the water level as follows: • Full = Four LEDs ON. • 7/8 = Three LEDs ON. • 5/8 = Two LEDs ON, Third LED Flashing. • 1/2 = Two LEDs ON. • 3/8 = One LED ON, Second LED Flashing. • 1/4 = One LED ON. • 1/8 = One LED Flashing. • Empty = All Four LEDs Flashing.
8	HOURMETER	Displays the number of hours the pump has been operated.
9	TACHOMETER	Displays the engine speed (in rpm).
10	AUDIBLE ALARM	Sounds an alarm whenever a warning condition occurs to alert the operator of a possible dangerous condition.
11	WARNING LIGHT BANK	Includes various warning lights.
12	INDICATOR LIGHT BANK	Includes various status indicator lights.
13	SWITCH BANK 2	Includes switches that control various pump functions.
14	SWITCH BANK 1	Includes switches that control various pump functions.
15	ACCESS PANEL LATCHES	When released, the pump panel can be opened, allowing access to various pump and foam system components.

Legend for Figure 3–1: Structural Pump Panel		
Callout Number	**Component**	**Description**
16	HUSKY FOAM SYSTEM CONTROL PANEL	The interface with the foam system: control panel contains the following controls, indicators, and information displays: A. System ON/OFF button—Press to activate or deactivate the foam system. B. Foam Percentage display—Displays the current percentage of foam concentrate being introduced. C. INCREASE button—Press to increase the percentage of foam concentrate. D. DECREASE button—Press to decrease the percentage of foam concentrate. E. PRIME button—Press to prime the foam system. F. System Status LED display—Displays the status of the foam system using colored LEDs: • Solid Green—System ON. • Solid Red—Valve Position Error. • Solid Yellow—Priming System. • Flashing Green—Injecting Foam. • Flashing Red—Low Tank Level. • Flashing Yellow—Refilling Tank.

Switch banks 1 and 2

Figure 3–2 is a closer image of switch banks 1 and 2, along with a list of their components and functions. The callout numbers and component descriptions are further explained in the table following the figure.

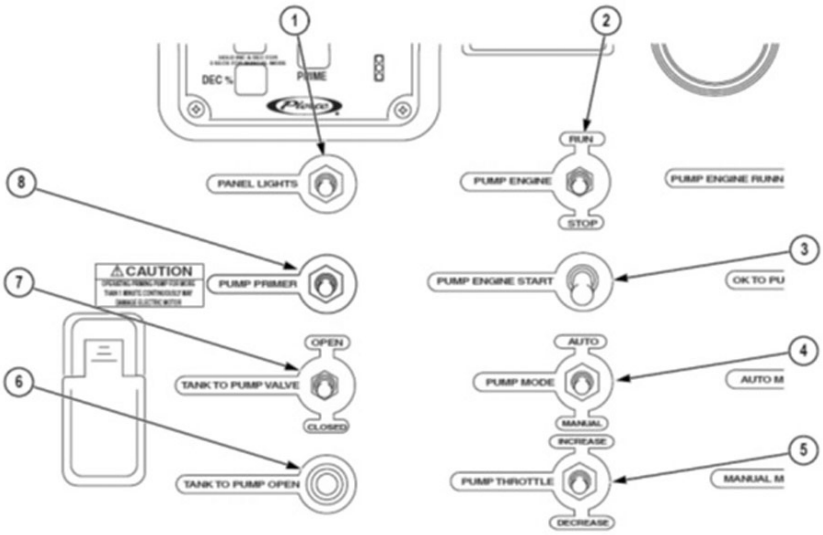

Figure 3–2. Switch banks 1 and 2.

Legend for Figure 3–2: Switch Banks 1 and 2		
Callout Number	**Component**	**Description**
1	PANEL LIGHTS SWITCH	Is a two-position toggle switch. Move the toggle up to turn the panel lights ON. Move the toggle down to turn the lights OFF. Release the toggle to allow the switch to return to the home position.
2	PUMP ENGINE RUN/STOP SWITCH	Is a two-position momentary toggle switch. Move the toggle up to place in the RUN mode. Move the toggle down to place in the STOP mode.
3	PUMP ENGINE START SWITCH	Is a two-position, momentary toggle switch. When the conditions for starting the pump engine are met, move the toggle up and hold until the pump engine starts; then release the switch.
4	PUMP MANUAL/AUTO MODE SWITCH	Is a two-position momentary toggle switch. Move the toggle up to place the pump in the AUTO mode. Move the toggle down to place the pump in the MANUAL mode. In either case, a light turns on to indicate the mode selected.
5	PUMP THROTTLE INCREASE/DECREASE SWITCH	Is a three-position momentary toggle switch. Move the toggle up to increase the pump engine speed. Move the toggle down to decrease the pump engine speed. Release the switch to allow the switch to return to the home position.
6	TANK TO PUMP OPEN INDICATOR LIGHT	When illuminated, indicates the tank to pump valve is open.
7	TANK TO PUMP VALVE OPEN/CLOSE SWITCH	Is a two-position momentary toggle switch. Move the toggle up to open the tank to pump valve. Move the toggle down to close the valve. Release the toggle to allow the switch to return to the home position.
8	PUMP PRIMER SWITCH	Is a two-position momentary toggle switch. Move the toggle up to engage the pump primer. Release the toggle to turn the primer OFF.
NOTE: *Do not* operate the pump primer continuously for more than *one minute*. Doing so may cause damage to the electric motor.		

Indicator and warning light banks

Figure 3–3 is a closer image of the indicator and warning light banks. The legend of callout numbers, along with a list of their components and functions, is shown in the table following the figure 3–3.

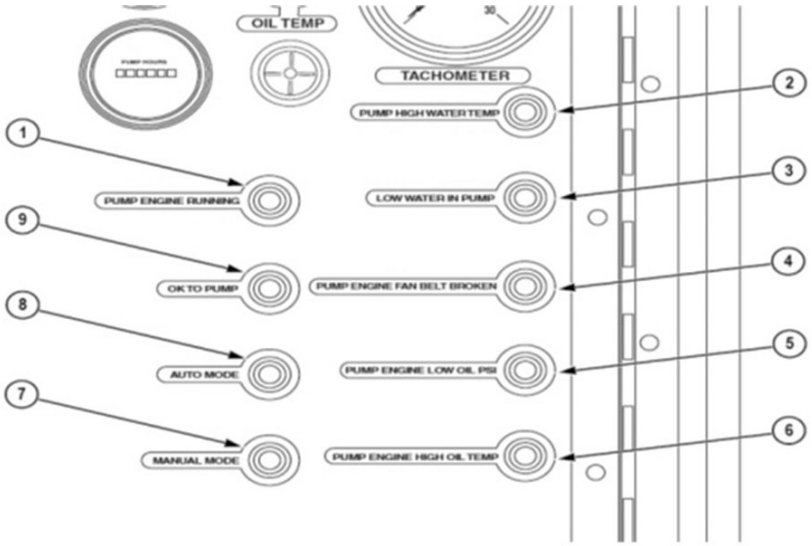

Figure 3–3. Indicator light and warning light banks.

Legend for Figure 3–3: Indicator Light and Warning Light Banks		
Callout Number	**Component**	**Description**
1	PUMP ENGINE RUNNING INDICATOR LIGHT	When illuminated, indicates the pump drive engine is operating.
2	PUMP HIGH WATER TEMPERATURE WARNING LIGHT	When illuminated, indicates the water temperature within the pump has reached maximum safe operating temperature (140°F). When this occurs, the pump overheat valve opens, dumping water on the ground, allowing cooler water to enter the pump. If additional cooling is required, open additional discharges.
3	LOW WATER IN PUMP WARNING LIGHT	When illuminated, indicates that the water level in pump has dropped below the safe operating level. Stop pumping operations to prevent damage to the pump. The light illuminates (solid) until 100 psi is established. Once the pressure exceeds 100 psi, the light goes out. Upon initial start, the operator has 30 seconds to achieve 100 psi. If the pressure drops below 100 psi during operations, the light begins to flash. If the pressure is not raised above 100 psi in 15 seconds, the engine automatically shuts down to prevent damage to the pump.
4	PUMP ENGINE FAN BELT BROKEN WARNING LIGHT	When illuminated, indicates the cooling fan belt is broken. Stop pumping operations to prevent damage to pump and engine.
5	PUMP ENGINE LOW OIL PRESSURE WARNING LIGHT	When illuminated, indicates the pump engine oil pressure has dropped below the safe operating level. Stop pumping operations and immediately shut off the engine to prevent engine damage.
6	PUMP ENGINE HIGH OIL TEMPERATURE WARNING LIGHT	When illuminated, indicates the pump engine oil temperature is above the safe operating limits. Stop pumping operations and immediately shut off the engine to prevent engine damage.
7	MANUAL MODE INDICATOR LIGHT	When illuminated, indicates the MANUAL mode has been engaged.
8	AUTO MODE INDICATOR LIGHT	When illuminated, indicates the AUTO mode has been engaged.
9	OK TO PUMP INDICATOR LIGHT	When illuminated, indicates conditions have been met to allow pump operation.

Lower pump compartment

The lower pump compartment (fig. 3–4) is located on the driver side of the vehicle, below the structural pump panel. In the table following figure 3–4 we breakdown the components within the lower pump compartment and their functions.

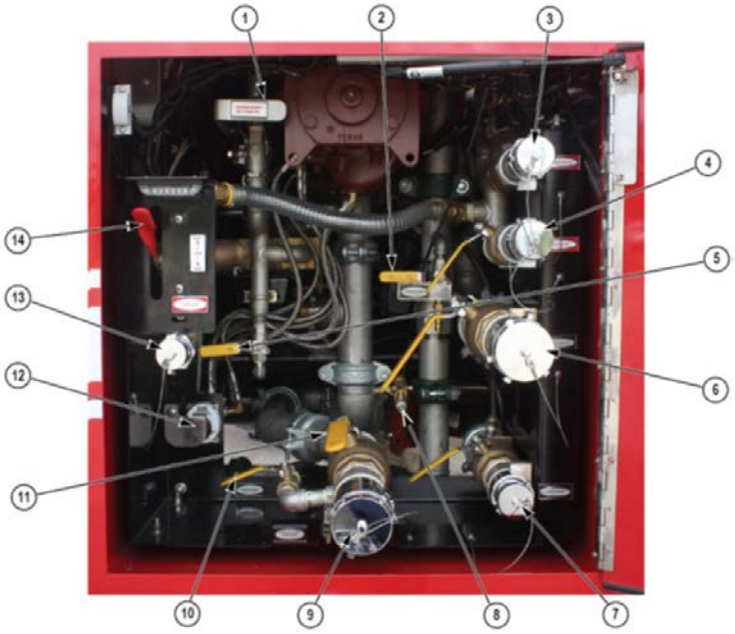

Figure 3–4. Lower pump compartment.

Legend for Figure 3–4: Lower Pump Compartment		
Callout Number	**Component**	**Description**
1	FOAM INJECT/FOAM FILL LEVER	Pull lever out to place the foam system in the FOAM FILL mode. Push the lever in to place the foam system in the INJECT mode.
2	MANIFOLD DRAIN	Move the lever ¼ turn counterclockwise to open the valve and drain water from the manifold or relieve trapped pressure in the manifold.
3	FOAM TANK FILL INLET	Is a 1½-inch inlet that allows the foam tank to be refilled from an external source through an external hose at flow rates of up to 7.5 gpm. The fill line incorporates a check valve and an easily removable strainer. The strainer is used to help prevent any debris from entering the foam tank.
4	FOAM DRAIN OUTLET AND VALVE	Is a 1½-inch outlet that allows the foam tank to be drained into storage containers. The outlet is controlled by ¼-turn valve.
5	FOAM PUMP DISCHARGE DRAIN VALVE	Is a ¼-turn valve that allows the foam discharge side of the foam pump to be drained and an aid when bleeding air from the foam system.
6	DIRECT TANK FILL INLET AND VALVE	Is a 2½-inch inlet that allows the water tank to fill during pumping operation. The inlet is controlled by a ¼-turn valve.
7	TANK DRAIN OUTLET AND VALVE	A 1½-inch outlet that allows the water tank to be drained. The tank drain is controlled by a ¼-turn valve.
8	AIR BLOW-OUT FITTING AND VALVE	Allows the connection of a compressed air source to blow water out of the water piping system.

Legend for Figure 3–4: Lower Pump Compartment		
Callout Number	**Component**	**Description**
9	DRIVER'S SIDE AUXILIARY INLET AND VALVE	A 2½-inch inlet connection to allow connection to a hydrant, or for truck-to-truck transfer. The inlet is controlled by a ¼-turn valve.
10	FRONT TURRET VALVE	A ¼-turn valve used to drain turret plumbing.
11	AUXILIARY INLET DRAIN VALVE	A ¼-turn valve that allows the auxiliary inlet to be drained
12	PUMP DRAIN	Pull to drain the pump after pumping operations are completed. Push to close the pump drain.
13	FOAM INLET	A 1-inch inlet connection to allow foam concentrate to be drawn from an external source, using a supplied hose.
14	FOAM TANK/DRAFT SELECTOR LEVER	Move the lever up to draw foam concentrate from an external source (draft). Move the lever to the lower position to draw foam concentrate from the foam tank.

017. Electrical system

The electrical system is a 12-VDC system powered by two batteries, wired in parallel, located under the hood of the vehicle.

Battery switch

Figure 3–5 shows the layout of the battery switch, battery status indicator, and 110-volt alternating current (VAC) connection port. These items are located on the front driver side of the vehicle. The table following the figure describes the battery switch, battery status indicator, and 100 VAC connection port in more detail.

Figure 3–5. Battery switch, battery status indicator, and 110-volt alternating current connection port.

Legend for Figure 3–5: Battery Switch, Battery Status Indicator, and 110 VAC Connection Port		
Callout Number	**Component**	**Description**
1	BATTERY SWITCH	Used to disconnect electrical power to the rear engine to prevent battery discharge while the vehicle is not in use. Rotate the switch clockwise to provide battery power to the engine, and rotate the knob counterclockwise to disconnect battery power.
2	BATTERY STATUS INDICATOR	Displays the battery's level of charge.
3	110 VAC, 20 AMP, 1 Ø, 60 HZ, SHORELINE CONNECTION	Provides 110 VAC, 60 hertz (Hz), auto-eject receptacle to provide electrical power to the battery charger/conditioner and engine block heater.

Cab control console

The cab control console (fig. 3–6) is located between the driver and front passenger seats to provide access from either side of the truck. The table following figure 3–6 gives callout numbers and details of each component's function.

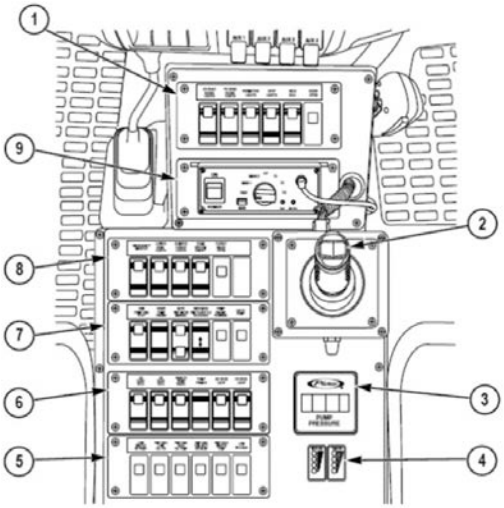

Figure 3–6. Cab control console.

Legend of Figure 3–6: Cab Control Console		
Callout Number	**Component**	**Description**
1	SWITCH BANK	Houses various lighting controls, HIGH IDLE switch and DOOR OPEN warning light (fig. 3–7).
2	BUMPER TURRET JOYSTICK	Controls the operation of the bumper turret functions.
3	PUMP PRESSURE DISPLAY	Displays the pump output pressure on a digital display.
4	LEVEL INDICATOR BANK	Houses indicators for water and foam tank levels
5	WARNING LIGHT BANK	Houses warning lights that monitor the status of various pump systems (fig. 3–10).
6	SWITCH BANK 4	Houses various firefighting controls and indicator lights (fig. 3–10).

Legend of Figure 3–6: Cab Control Console		
Callout Number	**Component**	**Description**
7	SWITCH BANK 3	Houses various firefighting controls and indicator lights (fig. 3–9).
8	SWITCH BANK 2	Houses various firefighting controls and indicator lights (fig. 3–8).
9	ELECTRONIC SIREN	Controls the operation of the electronic siren.

The switch bank (fig. 3–7) houses various lighting controls, a HIGH IDLE switch and a warning light indicating you have a door or compartment open. The table following figure 3–7 gives more detail about the switches and lights.

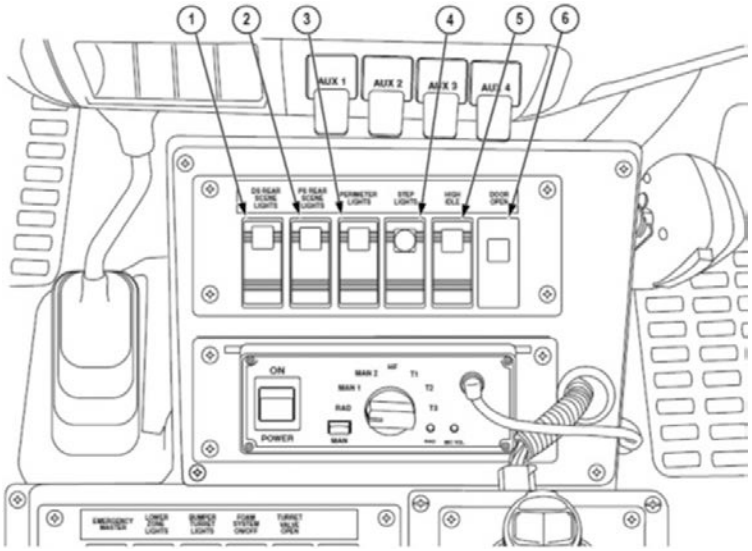

Figure 3–7. Switch bank.

Legend for Figure 3–7: Switch Bank		
Callout Number	**Switch or Light**	**Description**
1	DRIVER'S SIDE SCENE LIGHTS SWITCH (with indicator light)	Is a two-position rocker switch. Press on the top of the switch to turn ON the scene lights; the indicator light turns ON. Press the bottom of the switch to turn OFF the scene lights.
2	PASSENGER'S SIDE SCENE LIGHTS SWITCH (with indicator light)	Is a two-position rocker switch. Press on the top of the switch to turn ON the scene lights; the indicator light turns ON. Press the bottom of the switch to turn OFF the scene lights.
3	PERIMETER LIGHTS SWITCH (with indicator light)	Is two-position rocker switch. Press on the top of the switch to turn ON the perimeter lights; the indicator light turns ON. Press the bottom of the switch to turn OFF the perimeter lights.
4	STEP LIGHTS SWITCH (with indicator light)	Is a two-position momentary rocker switch. Press on the top of the switch to turn ON the step lights; the indicator light turns ON. Press the bottom of the switch to turn OFF the step lights.

Legend for Figure 3–7: Switch Bank		
Callout Number	**Switch or Light**	**Description**
5	HIGH IDLE SWITCH (with indicator light)	Is a two-position momentary rocker switch. The first switch position is the default switch position. The second switch position activates and deactivates the high idle function when pressed and released. The HIGH IDLE switch can be activated *only* with the vehicle transmission in park and the parking brake engaged.
6	DOOR OPEN INDICATOR LIGHT	Illuminates whenever a compartment door is open, the parking brake is released, or the transmission is in any position other than park.

Switch bank 2 houses the emergency master switch, lower zone light switch, and the bumper turret light switch (fig. 3–8). The table below the figure 3–8 gives more information about these controls and lights.

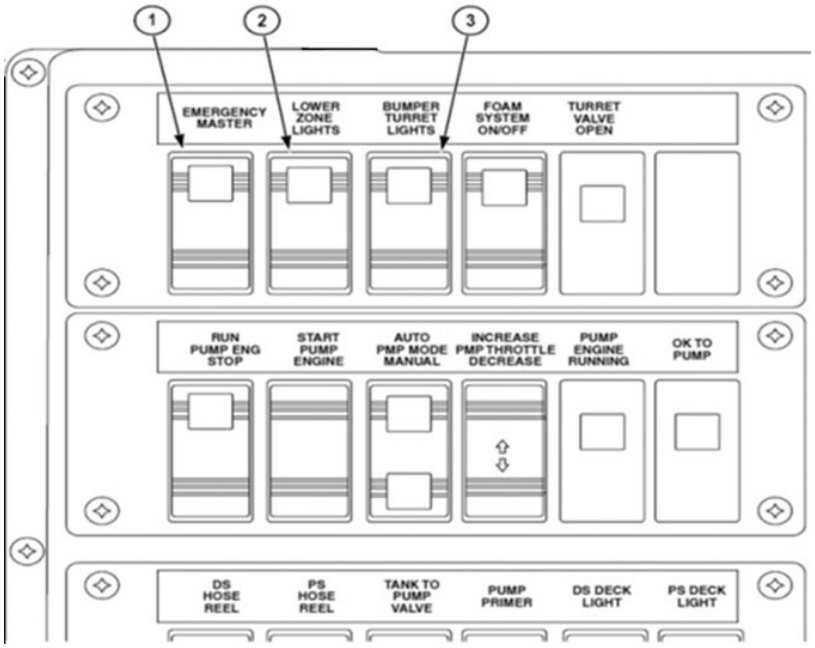

Figure 3–8. Switch bank 2.

Legend for Figure 3–8: Switch Bank 2		
Callout Number	**Component**	**Description**
1	EMERGENCY MASTER SWITCH (with indicator light)	Is a two-position rocker switch. Press the top of the switch to operate the warning lights and sirens; the indicator light turns ON. Press the bottom of the switch to turn all active warning lights and sirens OFF.
2	LOWER ZONE LIGHTS SWITCH (with indicator light)	Is a two-position rocker switch. Press the top of the switch to turn the lower zone lights ON; the indicator light turns ON. Press the bottom of the switch to turn the lights OFF.
3	BUMPER TURRET LIGHTS SWITCH (with indicator light)	Is a two-position rocker switch. Press the top of the switch to turn the bumper turret lights ON; the indicator light turns ON. Press the bottom of the switch to turn the bumper turret lights OFF.

Switch banks 2 and 3 (fig. 3–9) contain rear engine and dispensing controls and indicator lights.

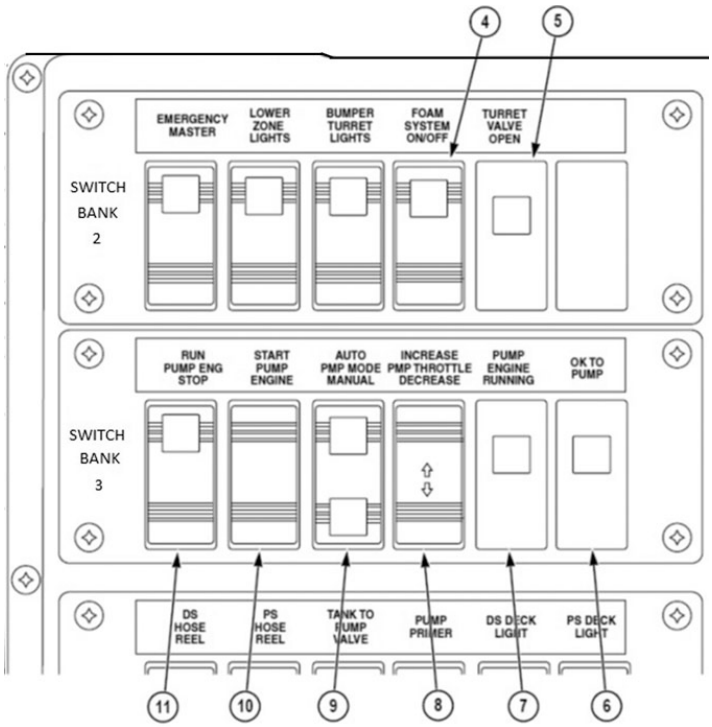

Figure 3–9. Switch banks 2 and 3.

Legend for Figure 3–9: Switch Banks 2 and 3		
Callout Number	**Component**	**Description**
4	FOAM SYSTEM ON/OFF SWITCH (with indicator light)	Is a two-position momentary rocker switch. Press the top of the switch to turn the foam system ON; the indicator light turns ON. Press the bottom of the switch to turn the foam system OFF.
5	TURRET VALVE OPEN INDICATOR LIGHT	When illuminated, indicates the turret valve is open.
6	OK TO PUMP INDICATOR LIGHT	When illuminated, indicates conditions have been met to allow the pump to be started.
7	PUMP ENGINE RUNNING INDICATOR LIGHT	When illuminated, indicates the pump drive engine is running.
8	PUMP THROTTLE INCREASE/DECREASE SWITCH	Is a two-position momentary rocker switch. Press the top of the switch to increase the pump engine speed. Press the bottom of the switch to decrease the pump engine speed.
9	PUMP MODE AUTO/MANUAL SWITCH (with indicator lights)	Is a two-position momentary rocker switch. Press the top of the switch to place the pump in the AUTO mode (crash); the indicator light turns ON. Press the bottom of the switch to place the pump in the MANUAL mode; the indicator light turns ON.
10	START PUMP ENGINE SWITCH	The start pump engine switch is a two-position, momentary rocker switch. With the conditions for starting the pump engine met, press and hold the top of the switch until the pump engine starts, and then release the switch.
11	PUMP ENGINE RUN/STOP SWITCH (with indicator light)	Is a two-position rocker switch. Press the top of the switch to enable the pump engine; the indicator light turns ON. Press the bottom of the switch to shut the pump engine OFF.

Switch bank 4 (fig. 3–10) contains controls for the hose reels and the pump priming system. The warning light bank houses indicators for the dispensing system engine's condition. The following table contains a list of components.

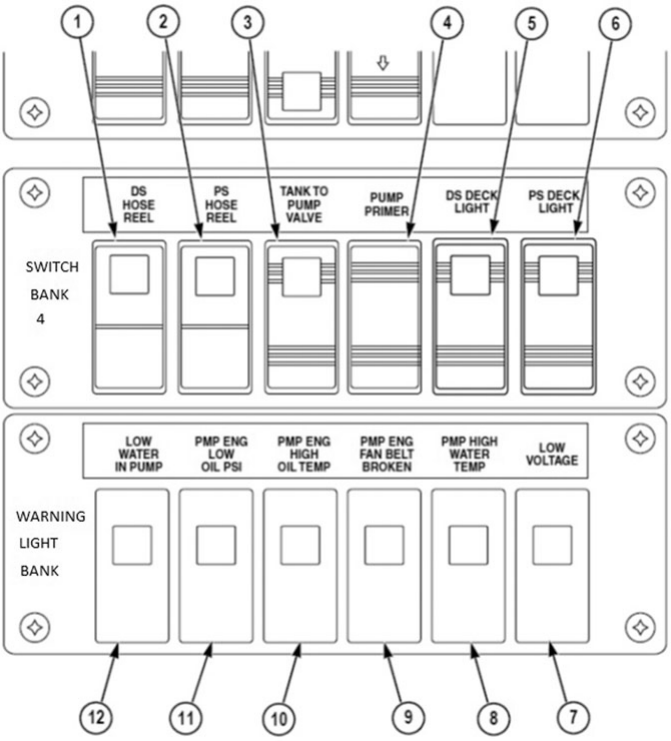

Figure 3–10. Switch bank 4 and warning light bank.

Legend of Figure 3–10: Switch Bank 4 and Warning Light Bank		
Callout Numbers	**Component**	**Description**
1	DRIVER'S SIDE HOSE REEL SWITCH (with indicator light)	Is a two-position rocker switch. Press the top of the switch to enable firefighting agent to flow to the hose reel; the indicator light turns ON. Press the bottom of the switch to shut the hose reel OFF.
2	PASSENGER'S SIDE HOSE REEL SWITCH (with indicator light)	Is a two-position rocker switch. Press the top of the switch to enable firefighting agent to flow to the hose reel; the indicator light turns ON. Press the bottom of the switch to shut the hose reel OFF.
3	TANK TO PUMP VALVE SWITCH (with indicator light)	Is a two-position momentary rocker switch. Press the top of the switch to open the tank to pump valve; the indicator light turns ON. Press the bottom of the switch to close the valve.
4	PUMP PRIMER	Is a momentary rocker switch. Press and hold the top of the switch to prime the pump. Release the switch to stop.
5	DRIVER'S SIDE DECK LIGHT SWITCH (with indicator light)	Is a two-position rocker switch. Press the top of the switch to turn the driver's side deck light ON; the indicator light turns ON. Press the bottom of the switch to turn the light OFF.
6	PASSENGER'S SIDE DECK LIGHT SWITCH (with indicator light)	Is a two-position rocker switch. Press the top of the switch to turn the passenger's side deck light ON; the indicator light turns ON. Press the bottom of the switch to turn the light OFF.
7	LOW VOLTAGE WARNING LIGHT	When illuminated, indicates the chassis voltage has dropped below the operating voltage.

Legend of Figure 3–10: Switch Bank 4 and Warning Light Bank		
Callout Numbers	**Component**	**Description**
8	PUMP HIGH WATER TEMPERATURE WARNING LIGHT	When illuminated, indicates the water temperature within the pump has reached that maximum safe operating temperature (140°F). When this occurs, the pump overheat valve opens, dumping water on the ground, allowing cooler water to enter the pump. If additional cooling is required, open additional discharges.
9	PUMP ENGINE FAN BELT BROKEN WARNING LIGHT	When illuminated, indicates the cooling fan belt has broken. Stop pumping operations and shut off the engine to prevent damage to the pump engine.
10	PUMP ENGINE HIGH OIL TEMPERATURE WARNING LIGHT	When illuminated, indicates the pump engine oil temperature is above the safe operating limits. If practical, remove load on pump engine and reduce engine speed to idle with the engine fan operating. This may help alleviate the overheat condition.
11	PUMP ENGINE LOW OIL PRESSURE WARNING LIGHT	When illuminated, indicates the pump engine oil pressure has dropped below the safe operating level. Stop pumping operations and immediately shut off the engine to prevent engine damage.
12	LOW WATER IN PUMP WARNING LIGHT	When illuminated, indicates the water level in the pump has dropped below the safe operating level. Stop pumping operations immediately to prevent pump damage. The light illuminates (solid) until 100 psi is established. Once the pressure exceeds 100 psi, the light goes out. Upon initial start, the operator has 30 seconds to achieve 100 psi. If the pressure drops below 100 psi during operations, the light begins to flash. If the pressure is not raised above 100 psi in 15 seconds, the engine automatically shuts down to prevent damage to the pump.

The water and foam level indicators allow the operator to monitor the fluid levels in each tank (fig. 3–11).

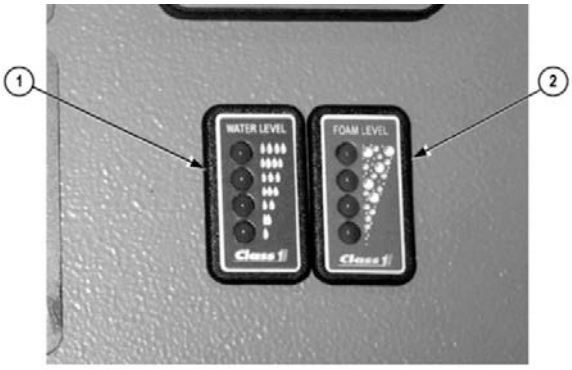

Figure 3–11. Water and foam level indicators.

Legend of Figure 3–11: Water and Foam Level Indicators		
Callout Numbers	**Component**	**Description**
1	WATER LEVEL INDICATOR	Displays the water level in the onboard storage tank. LED lights are used to indicate the water level as follows: • Full = Four LEDs ON. • 7/8 = Three LEDs ON.

Legend of Figure 3–11: Water and Foam Level Indicators		
Callout Numbers	**Component**	**Description**
		• 5/8 = Two LEDs ON, Third LED Flashing. • 1/2 = Two LEDs ON. • 3/8 = One LED ON, Second LED Flashing. • 1/4 = One LED ON. • 1/8 = One LED Flashing. • Empty = All Four LEDs Flashing.
2	FOAM LEVEL INDICATOR	Displays the level of foam concentrate in the onboard storage tank. LED lights are used to indicate the foam concentrate level as follows: • Full = Four LEDs ON. • 7/8 = Three LEDs ON • 5/8 = Two LEDs ON, Third LED Flashing. • 1/2 = Two LEDs ON. • 3/8 = One LED ON, Second LED Flashing. • 1/4 = One LED ON. • 1/8 = One LED Flashing. • Empty = All Four LEDs Flashing.

DO NOT MOVE APPARATUS light

Mounted on the interior roof of the cab between the driver and front passenger seats, this flashing red indicator light, accompanied by a tone alarm, are activated whenever the parking brake is released *and* any device is opened or deployed which would create a hazard or would be likely to cause damage if the apparatus is moved. Operators must be aware of this light in order to avoid damage to components.

018. The Kovatch RIV air system

The Kovatch RIV dispensing air system is fairly simple and consists of an electric air compressor and an air tank. The air is used to operate the valves that control water flow to the driver side hose reel, the passenger side hose reel, and the bumper turret. The system is regulated to 120 psi.

Other air system components

An air drain valve is attached to the bottom of the air tank. It must be drained after every time the system is used to remove air, moisture, and debris from the system.

The air system has a filter located under the air tank to remove contaminants from the system. Filter change frequency depends on operation frequency and field conditions. If it used in a dusty environment, it is recommended the filter be replaced at least once a month.

The air compressor is equipped with an automatic reset thermal protector, and can automatically restart after the thermal protector resets. *Always* cut off the power source when the thermal protector becomes activated.

Air system troubleshooting

The following troubleshooting table contains malfunctions, possible causes, and suggested remedies for repairing the *Kovatch* air system.

Troubleshooting the Kovatch Air System		
Malfunction	**Possible Cause**	**Suggested Remedy**
Tank pressure drops when compressor is off	1. Opened drain valve. 2. Leaking check valve. 3. Loose connections	1. Tighten valve. 2. Replace check valve. 3. Tighten and check connections with soapy water.
Compressor runs continuously and air flow lower than normal	Clogged filter element.	Replace air filter element.
Excessive moisture in discharge	Water in air tank.	Drain air tank, change air filter if needed.
Compressor will not run	1. Blown fuse. 2. Motor overheated. 3. Faulty pressure switch.	1. Disconnect compressor from power source, replace fuse (refer to manual). 2. Allow compressor to cool for 30 minutes to allow thermal overload switch to reset. 3. Replace pressure switch.
Thermal overload protector cuts out repeatedly	1. Lack of proper ventilation or ambient temperature is too high. 2. Compressor valves failed.	1. Move compressor to a well-ventilated area with lower ambient temperature. 2. Repair or replace compressor.

Self-Test Questions

After you complete these questions, you may check your answers at the end of the unit.

016. Dispensing system

1. What is the capacity of the P-34 RIV's water tank?

2. What type of pump is the foam transfer pump?

3. How much UHP water/foam solution is the agent delivery bumper turret capable of delivering?

4. What is indicated when all four LEDs are flashing on the foam level indicator?

5. How long should you limit continuous operation of the pump primer in order to prevent damage to the electric motor?

6. What is the maximum safe operating temperature for the water system?

7. Where is the lower pump compartment located?

017. Electrical system

1. For what do the 110 VAC shoreline connection ports provide electrical power?

2. What conditions must be met before the high idle switch can be activated?

3. What would cause the DO NOT MOVE APPARATUS light in the cab to illuminate?

018. The Kovatch RIV air system

1. What does the air system consist of?

2. How often should the air system filter be replaced if it is used in a dusty environment?

3. What should you always do when the air compressor thermal switch becomes activated?

4. What action should you take if the compressor does not turn due to an overheated motor?

3–2. P34 Dispensing and Electrical System Troubleshooting

The following section covers P-34 RIV dispensing and electrical system troubleshooting, as well as foam system setup and calibration procedures.

019. Dispensing system troubleshooting

The following table discusses malfunctions, possible causes, and suggested remedies for repairing the dispensing system of the P-34 RIV.

Troubleshooting the P-34 RIV Dispensing System		
Malfunction	**Possible Cause**	**Suggested Remedy**
Pump fails or loses prime	1. Air leaks in system. 2. Obstructions in intake strainer.	1. Ensure connections are tight, repair or replace defective parts. 2. Remove dirt and foreign matter from intake strainer.

Troubleshooting the P-34 RIV Dispensing System		
Malfunction	**Possible Cause**	**Suggested Remedy**
Insufficient water flow at full throttle	1. Insufficient engine power. 2. Discharge relief valve not at correct setting. 3. Damaged or worn pump.	1. Complete necessary engine repairs. 2. Adjust relief valve in accordance with proper manual. 3. Repair or replace pump.
System pressure not relieved properly	1. Sticky pilot valve. 2. Plugged tube lines.	1. Disassemble and clean. Replace noticeably worn parts. 2. Disconnect lines and inspect.
Delay in system pressure relief	Plugged line or filter.	Clean lines and filter.

It is important to keep in mind the water pump seal packing is *designed* to drip slightly during operation. This is to cool and lubricate the packing. It is desirable to adjust the packing housing to maintain a leakage rate of 10 to 120 drops per minute when operating at a discharge pressure of 150 psi. Adjustment procedures are as follows:

1. Engage pump per appropriate operating instructions. Operate the pump in VOLUME position at the capacity shown on the serial plate for 10 minutes before observing leakage.
2. Observe leakage. Normal leakage is 10–120 drops per minute.
3. If drip rate is considered high, stop the engine and tighten the packing gland nuts no more than 1/6 turn at a time to avoid over-tightening. Tighten gland nuts equally to ensure adjustment occurs evenly.

020. Electrical system troubleshooting

A properly adjusted foam system is vital to the proper operation of the RIV. Figure 3–12 shows the pump panel. The table following the figure identifies the callout numbers and components.

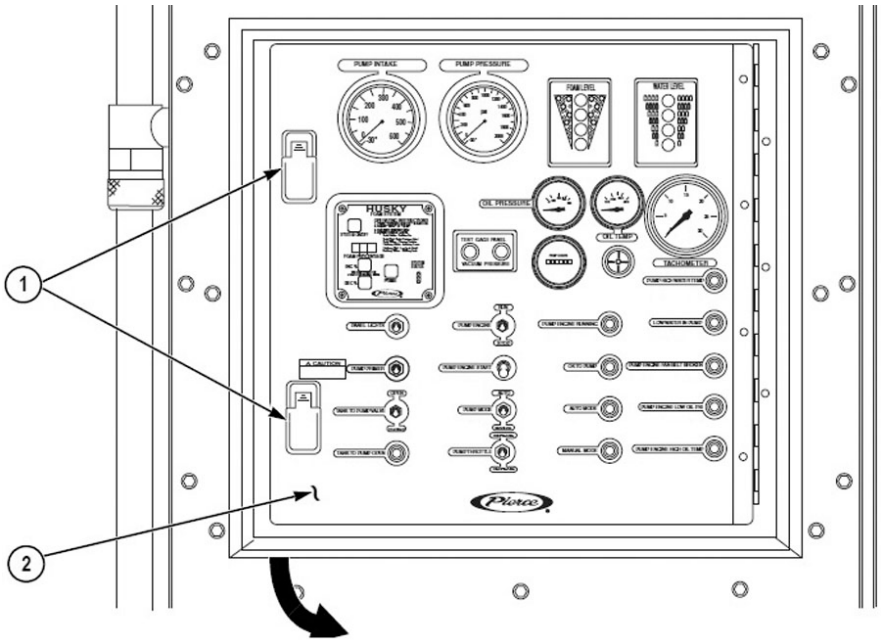

Figure 3–12. Pump panel.

Legend to Figure 3–12: Pump Panel	
Callout Number	**Component**
1	Release latches
2	Pump panel

Foam system set-up and calibration

The following steps and specifications are used to calibrate the foam system:

1. Turn the foam system ON.
2. Use the release latches and swing the pump panel out.
3. Locate the configuration plug behind the display module (fig. 3–13). Remove the cap from the fuse holder plug. Ground out the two pins; the Foam Percentage display should now be in CONFIGURATION mode, and should display “C1.” (**NOTE:** The diagnostic connector allows diagnostic tools such as laptop computers to connect to the foam system and upload system software updates.)

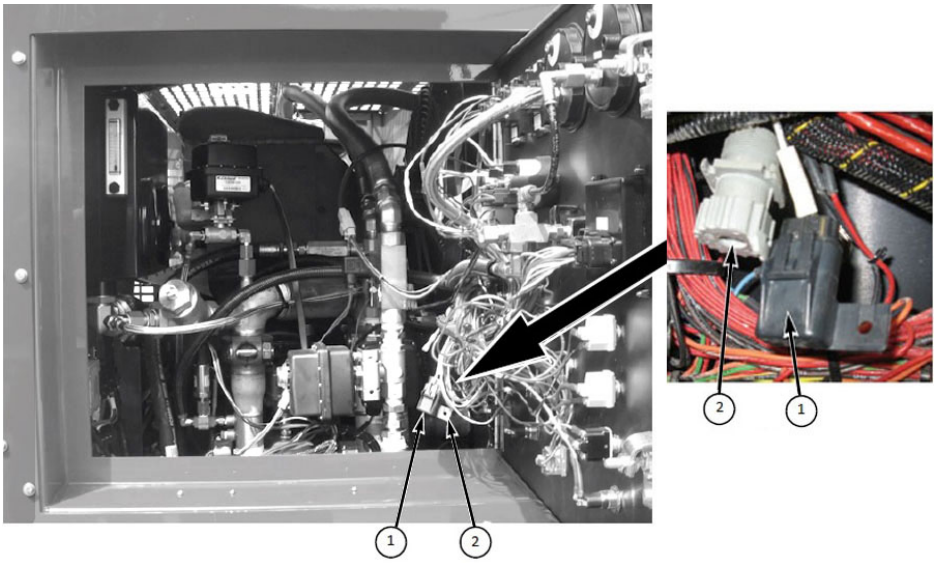

Figure 3–13. Configuration plug and diagnostic connector.

Legend to Figure 3–13: Configuration Plug and Diagnostic Connector	
Callout Number	**Component**
1	Configuration plug
2	Diagnostic connector

4. Select the configuration to be changed from the following list. Push the INC% and DEC% buttons to scroll up and down this list:

C1	**Refill Rate**: Sets the rate of the foam PUMP FILL mode for filling the tank.
C2	**Prime Rate**: Sets the rate that the foam pump will prime the system when the PRIME button is depressed and held down.
C3	**Default % Setting**: Sets the default setting for the injection rate of the foam at time of power up.

C4	**Rate Adjust Percent**: Sets the adjust amount for 0.4 gpm foam output (correction factor).
C5	**Rate Adjust Percent**: Sets the adjust amount for 1.3 gpm foam output (correction factor).
C6	**Paddle Wheel Water Flow Calibration**: Inputs low and high flow rates to the control head. • Depressing the PRIME button stores the value. • A green LED in the System Status will flash while water is flowing past the flow meter. Establish the correct water flow set rate, and when it has become stable, depress the PRIME button to store and proceed to the next step and repeat for the high flow rate. o FC1: Low flow rate calibration default rate set at 15 gpm. o FC2: High flow rate calibration default rate set at 60 gpm.
C7	**Calibrate Foam Pump Transducer**: While SET is on the display, the INC% and DEC% buttons can be used to check the low and high voltage settings of the transducer. • Low (DEC%) set range is 0.55 to 0.75 volts. • High (INC%) set range is 4.2 to 4.49 volts.
C8	**Water Recirculation Amount**: Default value 4.5 gpm • STR- **Store Values**: Press PRIME button to store values in permanent memory. • CLR- **Clear Values**: Depress PRIME button to reset back to default values.

5. Depress the PRIME button to select the option, the current value will then be displayed. The value can be changed by using the INC% and DEC% buttons.
6. To set the value and exit the selected option, press the PRIME button. The display will return to the “C” menu. After values have been set, they are placed in “soft” memory. Resetting power will undo all changes made. The new values must be ***stored*** to retain them in permanent memory.

Self-Test Questions

After you complete these questions, you may check your answers at the end of the unit.

019. Dispensing system troubleshooting

1. List three possible causes for insufficient water flow at full throttle.

2. Why is the water pump seal packing designed to drip?

3. When performing a pump packing adjustment, how long must the pump be operated prior to observing leakage?

020. Electrical system troubleshooting

1. During the foam system set-up and calibration, what should happen after grounding out the two pins on the fuse holder plug?

2. What is the low flow rate calibration default set?

Answers to Self-Test Questions

016

1. 400 gallons.
2. Hydraulically driven, self-priming, piston-type.
3. 1100 to 1500 psi at 60 gpm.
4. The foam tank is empty.
5. One minute.
6. 140°F.
7. On the driver side of the vehicle, below the structural pump panel.

017

1. The battery charger/conditioner and engine block heater.
2. When the vehicle transmission is in park and the parking brake is engaged.
3. When the parking brake is released and any device is opened or deployed.

018

1. An electric air compressor and air tank.
2. At least once a month.
3. Cut off the power source.
4. Allow compressor to cool for 30 minutes to allow thermal overload switch to reset.

019

1. (1) Insufficient engine power; (2) discharge relief valve not at correct setting; or (3) damaged or worn pump.
2. To cool and lubricate the packing.
3. 10 minutes.

020

1. The Foam Percentage display should now be in CONFIGURATION mode, and should display “C1.”
2. 15 gpm.

Unit Review Exercises

Note to Student: Consider all choices carefully, select the *best* answer to each question, and *circle* the corresponding letter. When you have completed all unit review exercises, transfer your answers to the Field-Scoring Answer Sheet.

Do not return your answer sheet to AFCDA.

72. (016) What is the capacity of the P-34 Rapid Intervention Vehicle (RIV) water tank?
    a. 300 gallons.
    b. 350 gallons.
    c. 400 gallons.
    d. 450 gallons.

73. (016) At what pressure will the P-34 Rapid Intervention Vehicle's (RIV) LOW WATER IN PUMP warning light begin to flash?
    a. Below 70 pounds per square inch (psi).
    b. Below 80 psi.
    c. Below 90 psi.
    d. Below 100 psi.

74. (017) What is the arrangement of the P-34 Rapid Intervention Vehicle's (RIV) batteries?
    a. Two batteries wired in parallel.
    b. Two batteries wired in series.
    c. Four batteries wired in parallel.
    d. Four batteries wired in series.

75. (017) What conditions must be met before the HIGH IDLE switch can be activated on the P-34 Rapid Intervention Vehicle (RIV)?
    a. Transmission in neutral, parking brake released.
    b. Transmission in drive, parking brake released.
    c. Transmission in park or neutral, parking brake engaged.
    d. Transmission in drive, parking brake engaged.

76. (018) If operating the Kovatch Rapid Intervention Vehicle (RIV) dispensing system in dusty conditions, then replace the air filter *at least* once
    a. a month.
    b. every three months.
    c. every six months.
    d. every twelve months.

77. (019) What is the desirable leakage rate of the P-34 Rapid Intervention Vehicle (RIV) pump packing housing when operating at a discharge pressure of 150 pounds per square inch (psi)?
    a. 10 to100 drops per minute.
    b. 50 to 100 drops per minute.
    c. 10 to 120 drops per minute.
    d. 50 to 150 drops per minute.

78. (019) When performing a pump packing adjustment on the P-34 Rapid Intervention Vehicle (RIV), how long must the pump be operated *prior* to observing leakage?
    a. 5 minutes.
    b. 10 minutes.
    c. 15 minutes.
    d. 20 minutes.

79. (019) When performing a packing adjustment on the P-34 Rapid Intervention Vehicle (RIV), how much should the packing gland nuts be tightened at one time?
    a. 1/8 turn.
    b. 1/6 turn.
    c. 1/4 turn.
    d. 1/2 turn.

80. (020) What is the P-34 Rapid Intervention Vehicle's (RIV) low flow rate calibration default setting?
    a. 15 gallons per minute (gpm).
    b. 20 gpm.
    c. 25 gpm.
    d. 30 gpm.

Student Notes

Glossary of Abbreviations and Acronyms

°F	degree Fahrenheit
amp	ampere
CFR	crash-fire-rescue
DDA	Detroit Diesel 8V92TA
ECM	electronic control module
EPR	electronic pressure regulator
gpm	gallons per minute
HIC	high-impact copolymer
HTO	heat transfer oil
Hz	hertz
LCD	liquid crystal display
LED	light-emitting diode
L/H	left-hand
mph	miles per hour
PKP	potassium bicarbonate
psi	pounds per square inch
PTO	power takeoff
qts	quarts
rpm	revolutions per minute
RIV	Rapid Intervention Vehicle
SOL	seriously operationally limited
TCM	transmission control module
TO	technical order
UHP	ultra-high pressure
USAF	United States Air Force
USMC	United States Marine Corps
UV	ultraviolet
VAC	voltage alternating current
VDC	volt direct current
wt.	weight

Student Notes

AFSC 2T351A
A2T351 01 1805
Edit Code 01